Integrator Series 2

DC590+ DC Digital Drive

HA466461U004 ISSUE 1

Compatible with Version 8.x Software onwards

2008 Parker SSD Drives, a division of Parker Hannifin Ltd.

All rights strictly reserved. No part of this document may be stored in a retrieval system, or transmitted in any form or by any means to persons not employed by a Parker SSD Drives company without written permission from Parker SSD Drives, a division of Parker Hannifin Ltd . Although every effort has been taken to ensure the accuracy of this document it may be necessary, without notice, to make amendments or correct omissions. Parker SSD Drives cannot accept responsibility for damage, injury, or expenses resulting therefrom.

WARRANTY

Parker SSD Drives warrants the goods against defects in design, materials and workmanship for the period of 24 months from the date of manufacture, or 12 months from the date of delivery (whichever is the longer period), on the terms detailed in Parker SSD Drives Standard Conditions of Sale IA500504.

Parker SSD Drives reserves the right to change the content and product specification without notice.

PRODUCT MANUAL

Cont. 1

Safety Information

FAILURE OR IMPROPER SELECTION OR IMPROPER USE OF THE PRODUCTS DESCRIBED HEREIN OR RELATED ITEMS CAN CAUSE DEATH, PERSONAL INJURY AND PROPERTY DAMAGE.

- This document and other information from Parker-Hannifin Corporation, its subsidiaries and authorized distributors provide product or system options for further investigation by users having technical expertise.

- The user, through its own analysis and testing, is solely responsible for making the final selection of the system and components and assuring that all performance, endurance, maintenance, safety and warning requirements of the application are met. The user must analyze all aspects of the application, follow applicable industry standards, and follow the information concerning the product in the current product catalog and in any other materials provided from Parker or its subsidiaries or authorized distributors.

- To the extent that Parker or its subsidiaries or authorized distributors provide component or system options based upon data or specifications provided by the user, the user is responsible for determining that such data and specifications are suitable and sufficient for all applications and reasonably foreseeable uses of the components or systems.

Safety Information

Requirements

IMPORTANT ***Please read this information BEFORE installing the equipment.***

Intended Users

This manual is to be made available to all persons who are required to install, configure or service equipment described herein, or any other associated operation.

The information given is intended to highlight safety issues, and to enable the user to obtain maximum benefit from the equipment.

Complete the following table for future reference detailing how the unit is to be installed and used.

INSTALLATION DETAILS			
Model Number *(see product label)*		**Where installed** *(for your own information)*	
Unit used as a: *(refer to "Certification")*	❑ Component ❑ Relevant Apparatus	**Unit fitted:**	☑ Enclosure

Application Area

The equipment described is intended for industrial (non-consumer) motor speed control utilising DC motors.

Personnel

Installation, operation and maintenance of the equipment should be carried out by qualified personnel. A qualified person is someone who is technically competent and familiar with all safety information and established safety practices; with the installation process, operation and maintenance of this equipment; and with all the hazards involved.

Safety Information

Product Warnings

Caution Risk of electric shock	**Caution** Refer to documentation	**Earth/Ground** Protective Conductor Terminal

Hazards

DANGER! - Ignoring the following may result in injury

1. This equipment can endanger life by exposure to rotating machinery and high voltages.

2. The equipment must be permanently earthed due to the high earth leakage current, and the drive motor must be connected to an appropriate safety earth.

3. Ensure all incoming supplies are isolated before working on the equipment. Be aware that there may be more than one supply connection to the drive.

4. There may still be dangerous voltages present at power terminals (motor output, supply input phases, DC bus and the brake, where fitted) when the motor is at standstill or is stopped.

5. For measurements use only a meter to IEC 61010 (CAT III or higher). Always begin using the highest range.
   CAT I and CAT II meters must not be used on this product.

6. Allow at least 10 minutes for the drive's capacitors to discharge to safe voltage levels (<50V). Use the specified meter capable of measuring up to 1000V dc & ac rms to confirm that less than 50V is present between all power terminals and between power terminals and earth.

7. Unless otherwise stated, this product must NOT be dismantled. In the event of a fault the drive must be returned. Refer to "Routine Maintenance and Repair".

Safety Information

WARNING! - Ignoring the following may result in injury or damage to equipment

SAFETY

Where there is conflict between EMC and Safety requirements, personnel safety shall always take precedence.

- Never perform high voltage resistance checks on the wiring without first disconnecting the drive from the circuit being tested.
- Whilst ensuring ventilation is sufficient, provide guarding and /or additional safety systems to prevent injury or damage to equipment.
- When replacing a drive in an application and before returning to use, it is essential that all user defined parameters for the product's operation are correctly installed.
- All control and signal terminals are SELV, i.e. protected by double insulation. Ensure all external wiring is rated for the highest system voltage.
- Thermal sensors contained within the motor must have at least basic insulation.
- All exposed metalwork in the Drive is protected by basic insulation and bonded to a safety earth.
- RCDs are not recommended for use with this product but, where their use is mandatory, only Type B RCDs should be used.

EMC

- In a domestic environment this product may cause radio interference in which case supplementary mitigation measures may be required.
- This equipment contains electrostatic discharge (ESD) sensitive parts. Observe static control precautions when handling, installing and servicing this product.
- This is a product of the restricted sales distribution class according to IEC 61800-3.
- It is designated as "professional equipment" as defined in EN61000-3-2. Permission of the supply authority shall be obtained before connection to the low voltage supply.

Cont. 5

Safety Information

CAUTION!

APPLICATION RISK

- The specifications, processes and circuitry described herein are for guidance only and may need to be adapted to the user's specific application. We can not guarantee the suitability of the equipment described in this Manual for individual applications.
- It is advised that motors with significantly lower voltage ratings than the supply voltage are **NOT** used with the drive.

RISK ASSESSMENT

Under fault conditions, power loss or unintended operating conditions, the drive may not operate as intended. In particular:

- Stored energy might not discharge to safe levels as quickly as suggested, and can still be present even though the drive appears to be switched off
- The motor's direction of rotation might not be controlled
- The motor speed might not be controlled
- The motor might be energised

A drive is a component within a drive system that may influence its operation or effects under a fault condition. Consideration must be given to:

- Stored energy
- Supply disconnects
- Sequencing logic
- Unintended operation

Contents

CHAPTER 1: Getting Started

About this Manual 1-1
- How the Manual is Organised 1-1
- Initial Steps 1-1

Equipment Inspection and Storage 1-2

Packaging and Lifting Details 1-2

CHAPTER 2: Product Overview

Product Range 2-1
- 590+ Controller (Frames 1 & 2) 2-3
- 590+ Controller (Frame 3) 2-4
- 590+ Controller (Frames 4 & 5) 2-5
- 590+ Controller (Frame 6) 2-6
- 590+ Product (Frame H) 2-7
- 590+ Door Assembly (Frames 3, 4, 5, 6 & H) 2-8

How it Works 2-9

Control Features 2-10

Keypads 2-11

Option Boards 2-11

CHAPTER 3: Installing the Drive

Mechanical Installation 3-1
- Unpacking the Drive 3-1
- Lifting the Drive 3-1
- Mounting the Drive 3-5
- Ventilation and Cooling Requirements 3-6
- AC Line Choke 3-7
- Filtering 3-8

Electrical Installation 3-9
- Minimum Connection Requirements 3-11
  - Connection Diagrams 3-13
  - Power Connections 3-17
  - Control Connections 3-22
- Motor Field Options 3-30
  - Internal/External Supply (Frames 2, 3, 4 & 5) 3-30
- DC Contactor - External Va Sensing 3-34
  - Power Board - PCB Reference 385851 (Frame 3) 3-34
  - Power Board – PCB Reference 466701 (Frames 4 & 5) 3-35
  - External Connections (Frames 6 & H) 3-36
- Power Board Circuit Descriptions 3-37
  - AH470280U001, U002, U003, U004 (Frame 1) 3-37
  - AH470330 (Frame 2) 3-39
  - AH385851U002, U003, U004, U005 (Frame 3) 3-41
  - AH466701U001, U002, U003 (Frames 4 & 5) 3-46
  - AH469419 (Frame 6) 3-49
  - AH466001U001, U101 (Frame H) 3-50

Optional Equipment 3-53
- Remote Mounting the Keypad 3-54
  - Speed Feedback and Technology Options 3-56
  - External AC Supply EMC Filter Installation 3-60
  - Earth Fault Monitoring Systems 3-62

Frame 6: Assembly and Installation 3-63
- Assembly 3-65
- Electrical Installation 3-73

Frame H: Additional Information 3-74

Installation Drawings 3-75
Drive Installation Drawings 3-75
Filter Installation Drawings 3-87
Line Choke Installation Drawings 3-94

CHAPTER 4: Operating the Drive

Pre-Operation Checks 4-1
Control Philosophy 4-2
Start/Stop and Speed Control 4-2
- Selecting Local or Remote Control 4-3

Reading the Status LEDs 4-4
Setting-up the Drive 4-5
Calibrating the Control Board 4-5
Selecting Speed Feedback 4-7
- Speed Feedback Option Boards 4-7

Initial Start-Up Routine 4-9
Performance Adjustment 4-16
- Current Loop - The ARMATURE Autotune Feature 4-16
- Speed Loop Adjustment 4-17

Starting and Stopping Methods 4-19
Stopping Methods 4-19
- Normal Stop (C3) 4-19
- Program Stop (B8) 4-22
- Coast Stop (B9) 4-24
- Standstill 4-24
- The Trip Condition 4-24

Normal Starting Method 4-24
Advanced Starting Methods 4-25
- Starting Several Drives Simultaneously 4-25
- Jog 4-25
- Crawl 4-25
- Take Up Slack 4-26

CHAPTER 5: Control Loops

Control Loops - Principle of Operation 5-1
Current Loop 5-1
Speed Loop 5-4
Field Control 5-5
- Set-Up Notes 5-5
- Field Weakening 5-6
- Standby Field 5-7

CHAPTER 6: The Keypad

Connecting the 6911 Keypad 6-1
Control Key Definitions 6-2
- Keys for Programming the Drive 6-2
- Keys for Operating the Drive Locally 6-3

Indications 6-3
- Keypad Alarm Messages 6-3
- Keypad LEDs 6-4

The Menu System 6-5
The Local Menu 6-6
- The L/R Key 6-6
- The PROG Key 6-6

Navigating the Menu System 6-7
Changing a Parameter Value 6-7
The Menu System Map 6-8
The Keypad Menus 6-10
- DIAGNOSTICS 6-10
- SETUP PARAMETERS 6-15
- PASSWORD 6-16
- ALARM STATUS 6-17
- MENUS 6-17
- SERIAL LINKS 6-18
- SYSTEM 6-18

- PARAMETER SAVE 6-18
- CONFIGURE DRIVE 6-19
- FUNCTION BLOCKS 6-20

Menu Shortcuts and Special Key Combinations 6-21
- Quick Tag Information 6-21
- Changing the Stack Size (3-button reset) 6-21
- Resetting to Factory Defaults (2-button reset) 6-22
- Cloning Feature 6-22

How to Save, Restore and Copy your Settings 6-23
Saving Your Application 6-23
Restoring Saved Settings 6-24
Copying an Application 6-24

CHAPTER 7: Trips and Fault Finding

Trips and Fault Finding 7-1
Trips 7-1
- What Happens when a Trip Occurs 7-1
- Resetting a Trip Condition 7-1

Fault Finding 7-2
- Calibration Checks 7-3
- Alarm Messages 7-7
- Hexadecimal Representation of Trips 7-8

Power Board LED Trip Information (Frame 4, 5, 6 & H) 7-9
- Using the MMI to Manage Trips 7-13
- Test Points 7-19

CHAPTER 8: Routine Maintenance & Repair

Maintenance 8-1
Service Procedures 8-1
- Preventive Maintenance 8-1

Repair 8-2
Saving Your Application Data 8-2
Returning the Unit to Parker SSD Drives 8-2
Disposal 8-3
Technical Support Checks 8-3
Repairs for Frames 4 & 5 8-5
- Replacing the Fan (Frames 4 & 5) 8-5

Repairs for Frame 6 8-6
- AC Fuse Replacement (Frame 6 Non-Regen Unit - 2Q) 8-6
- DC Fuse Replacement (Frame 6 Regen Unit - 4Q) 8-7
- Replacing a Phase Assembly (Frame 6) 8-9
- Replacing a Fan (Frame 6) 8-10

Repairs for Frame H 8-11
- Fuse Replacement (Frame H) 8-11
- Phase Assembly Replacement (Frame H) 8-14

APPENDIX A: Serial Communications

System Port (P3) A-1
UDP Support A-2
- System Port (P3) Set-up A-2
- UDP Transfer Procedure A-2
- MMI Dump Procedure A-3

ConfigEd Lite Support A-4
- System Port (P3) Set-up A-4

5703 Support A-5
- System Port (P3) Set-up A-7

EI Bisynch ASCII Support A-8
- System Port (P3) Set-up A-8

EI Binary Support A-13
- System Port (P3) Set-up A-13
- EI Bisynch Binary Message Protocol A-15
- EI Bisynch Binary Parameter Specification Tables A-19

Error Codes A-28
- ERROR REPORT (EE) A-28

Cont. 9

APPENDIX B: Certification

Introduction B-1
Europe B-1
What are the European Directives? B-1
CE Marking for the Low Voltage Directive (LVD) 2006/95/EC B-2
CE Marking for the EMC Directive 2004/108/EC B-2
United States of America & Canada B-4
Compliance B-4
Conditions for Compliance with UL508c B-4
Australia & New Zealand B-10
EMC Standards B-10
EMC..... B-11
Emissions Limits B-11
Which Standards Apply? B-13
EMC General Installation Considerations B-14
Certificates..... B-16

APPENDIX C: Parameter Specifications

Introduction B-1
Europe B-1
What are the European Directives? B-1
CE Marking for the Low Voltage Directive (LVD) 2006/95/EC B-2
CE Marking for the EMC Directive 2004/108/EC B-2
United States of America & Canada B-4
Compliance B-4
Conditions for Compliance with UL508c B-4
- Solid-State Motor Overload Protection B-4
- Branch Circuit/Short Circuit Protection Requirements B-5
- Short Circuit Rating B-6
- Field Wiring Temperature Rating B-6
- Operating Ambient Temperature B-6
- Field Wiring Terminal Markings B-6
- Power and Control Field Wiring Terminals B-6
- Field Grounding Terminals B-7
- Field Terminal Kits B-7
- Recommended Wire Sizes B-8
- Field Grounding Terminals B-9
- Operating Ambient Temperature B-9
- External Power Semiconductor Protection Fuses B-9

Australia & New Zealand B-10
EMC Standards B-10
EMC B-11
Emissions Limits B-11
EMC General Installation Considerations B-13
- Earthing Requirements B-13
- Increasing Motor Cable Length B-14

Certificates B-15

APPENDIX D: Programming

Programming Your Application D-1
Programming with Block Diagrams D-1
- Modifying a Block Diagram D-1
- Saving Your Modifications D-4
- Understanding the Function Block Description D-4
- MMI Menu Maps D-5
- Function Blocks By Category D-6
- Compatibility with Earlier Versions of Firmware D-7

Function Block Descriptions..... D-10
- 5703 IN D-10
- 5703 OUT D-11
- ADVANCED D-12
- ALARM HISTORY D-15
- ALARMS D-16
- ANALOG INPUTS D-20

- ANALOG OUTPUTS D-22
- AUTOTUNE D-23
- AUX I/O D-25
- CALIBRATION D-26
- COMMS PORT D-29
- CONFIGURE DRIVE D-31
- CURRENT LOOP D-32
- CURRENT PROFILE D-37
- DEADBAND D-38
- DEMULTIPLEXER D-39
- DIAMETER CALC. D-40
- DIGITAL INPUTS D-48
- DIGITAL OUTPUTS D-51
- DRIVE INFO D-54
- ENCODER D-56
- FEEDBACKS D-59
- FIELD CONTROL D-60
- INERTIA COMP D-68
- LINK D-69
- INVERSE TIME D-70
- JOG/SLACK D-71
- LOGIC FUNC D-74
- MENUS D-80
- MIN SPEED D-81
- miniLINK D-82
- MULTIPLEXER D-83
- OP STATION D-84
- PID D-86
- PLL (PHASE LOCKED LOOP) D-91
- PNO CONFIG D-92
- PRESET SPEEDS D-93
- PROFILED GAIN D-96
- RAISE/LOWER D-98
- RAMPS D-101
- SELECT D-107
- SEQUENCING D-108
- SETPOINT SUM D-111
- SPEED LOOP D-114
- SRAMP D-121
- STANDSTILL D-124
- STOP RATES D-126
- TEC OPTION D-129
- TORQUE CALC. D-131
- VALUE FUNC D-132

The Default Application D-143

Block Diagrams D-143
- Programming Block Diagram - Sheet 1 D-144
- Programming Block Diagram - Sheet 2 D-145
- Programming Block Diagram - Sheet 3 D-146
- Programming Block Diagram - Sheet 4 D-147
- Main Block Diagram D-148
- Field Control Block Diagram D-149
- Start/Healthy Logic Block Diagram D-150
- Functional Block Diagram D-151

APPENDIX E: Technical Specifications

Understanding the Product Code..... E-1

Model Number E-1
- Door Assembly Product Code E-4

Technical Specifications E-5
- Environmental Details E-5
- Electrical Ratings - Power Circuit E-6
- Electrical Ratings - Power Circuit E-7
- EMC Compliance E-7
- Power Supply Details E-8

Cont. 11

- Auxiliary Power Supply Details E-8
- AC Line Choke (Frames 1-5) E-9
- AC Line Choke (Frames 6 & H) E-11
- External AC Supply (RFI) Filters E-12
- External Power Semiconductor Protection Fuses (Frames 1-5) E-13
- Internal Power Semiconductor Protection Fuses (Frames 6 & H) E-14
- Earthing/Safety Details E-14
- Power Supply Fuses E-15
- Field Fuses E-15
- Terminal Definitions (Digital/Analog Inputs & Outputs) E-16
- Terminal Information - Power Board (Frames 1-5) E-17
- Terminal Information – Control Board E-21
- Terminal Information (Frames 6 & H) E-26
- Terminal Information – Option Boards E-27
- Wiring Requirements for EMC Compliance E-28
- Wire Sizes and Termination Tightening Torques (Frames 1-5) E-29
- Termination Tightening Torque (Frame 6) E-31
- Termination Tightening Torque (Frame H) E-31
- Cooling Fans E-32
- Spares List (Frames 1-5 & H) E-33
- Spares List (Frame 6) E-39

Chapter 1

Getting Started

A few things you should do when you first receive the unit.

About this Manual 1-1
How the Manual is Organised 1-1
Initial Steps 1-1
Equipment Inspection and Storage 1-2
Packaging and Lifting Details 1-2

About this Manual

This manual is intended for use by the installer, user and programmer of the DC590+ Series DC Digital Drive. It assumes a reasonable level of understanding in these three disciplines.

NOTE **Please read all Safety Information before proceeding with the installation and operation of this unit.**

Enter the “Model No” from the rating label into the "Installation Details" table at the front of this manual. It is important that you pass this manual on to any new user of this unit.

This manual is for the following models from the DC590+ Series DC Digital Drive:

- Three phase, regenerative, four quadrant armature controllers: 590+
- Three phase non-regenerative, two quadrant armature controllers: 591+
- 590+ Door

How the Manual is Organised

This Engineering Reference manual is organised into chapters and appendices, indicated by the numbering on the edge of each page.

The manual is more detailed than the QuickStart manual, and so is of use to the unfamiliar as well as the high-end user.

Application Block Diagram

You will find this at the rear of Appendix D: "Programming" . These will become your programming tool as you become more familiar with the software.

Initial Steps

Use the manual to help you plan the following:

Installation

Know your requirements:

- certification requirements, CE/UL/c-UL conformance
- conformance with local installation requirements
- supply and cabling requirements

Operation

Know your operator:

- how is it to be operated, local and/or remote?
- what level of user is going to operate the unit?
- decide on the best menu level for the Keypad (where supplied)

Programming (Keypad or suitable PC programming tool only)

Know your application:

- plan your "block diagram programming"
- enter a password to guard against illicit or accidental changes
- learn how to back-up your application data
- customise the Keypad to the application

Equipment Inspection and Storage

- Check for signs of transit damage
- Check the product code on the rating label conforms to your requirement.

If the unit is not being installed immediately, store the unit in a well-ventilated place away from high temperatures, humidity, dust, or metal particles.

Refer to Chapter 2: "Product Overview" to check the rating label/product code.
Refer to Chapter 8: "Routine Maintenance and Repair" for information on returning damaged goods.
Refer to Appendix E: "Technical Specifications" - Environmental Details for the storage temperature.

Packaging and Lifting Details

WARNING

The packaging is combustible. Igniting it may lead to the generation of lethal toxic fumes.

- Save the packaging in case of return. Improper packaging can result in transit damage.
- Use a safe and suitable lifting procedure when moving the unit. Never lift the unit by its terminal connections.

Prepare a clear, flat surface to receive the drive before attempting to move it. Do not damage any terminal connections when putting the unit down.

Chapter 2

Product Overview

An introduction to the 590+ range of products, and a quick look at the Keypads and available plug-in Options.

Product Range 2-1
590+ Controller (Frames 1 & 2) 2-3
590+ Controller (Frame 3) 2-4
590+ Controller (Frames 4 & 5) 2-5
590+ Controller (Frame 6) 2-6
590+ Product (Frame H) 2-7
590+ Door Assembly (Frames 3, 4, 5, 6 & H) 2-8
How it Works 2-9
Control Features 2-10
Keypads 2-11
Option Boards 2-11

Product Range

The DC590+ Series DC Digital Drive is designed for use in a suitable enclosure, with associated control equipment. The unit accepts a variety of standard three-phase ac supply voltages depending upon the model, and is suitable for the powering of DC shunt field and permanent magnet motors, providing controlled dc output voltage and current for armature and field.

All units are designed for simple and economical panel mounting using keyhole slots. Plug-in control connectors simplify the fitting and removal of the unit to the panel.

Where possible, standard parts are used throughout the range thereby reducing the variety of spare parts required to maintain a multi-drive system. For example, the same basic control boards are used in all types of three-phase armature controller regardless of horsepower or bridge configuration.

The control circuit is totally isolated from the power circuit thus simplifying the interconnection of controllers within a system and improving operator safety. The coding circuitry adjusts automatically to accept supply frequencies between 45-65Hz and possesses high immunity to supply-borne interference. The armature controllers are phase rotation insensitive.

Control and Communications

The drive is controlled by a 32 bit Microcontroller providing advanced features such as:

- **Complex control algorithms** which are not achievable by simple analog techniques.
- **Software-configurable control circuitry** built around standard software blocks.
- **Serial link communications** with other drives or a PC for advanced process systems.

The Keypad gives access to parameters, diagnostic messages, trip settings and full application programming.

Regenerative and Non-Regenerative Models

The motor armature controllers include both regenerative and non-regenerative models:

- **Regenerative controllers** consist of two fully-controlled thyristor bridges and a field bridge with full transient and overload protection, together with sophisticated electronic control of acceleration and deceleration, speed and torque in both directions of rotation.
- **Non-regenerative controllers** consist of one fully-controlled thyristor bridge and a field bridge with full transient and overload protection, together with its associated electronic control circuitry, and provide accurate speed and/or torque control in one selected direction of rotation.

Field Regulator

A field regulator is fitted as standard. The regulator consists of a full-wave half controlled single phase thyristor bridge with transient and overload protection. It provides either a fixed voltage or fixed current source, depending upon the selected mode of operation for constant torque applications. The field current mode of operation can be further enhanced to provide field weakening for drive control motors which require extended speed or constant horsepower control.

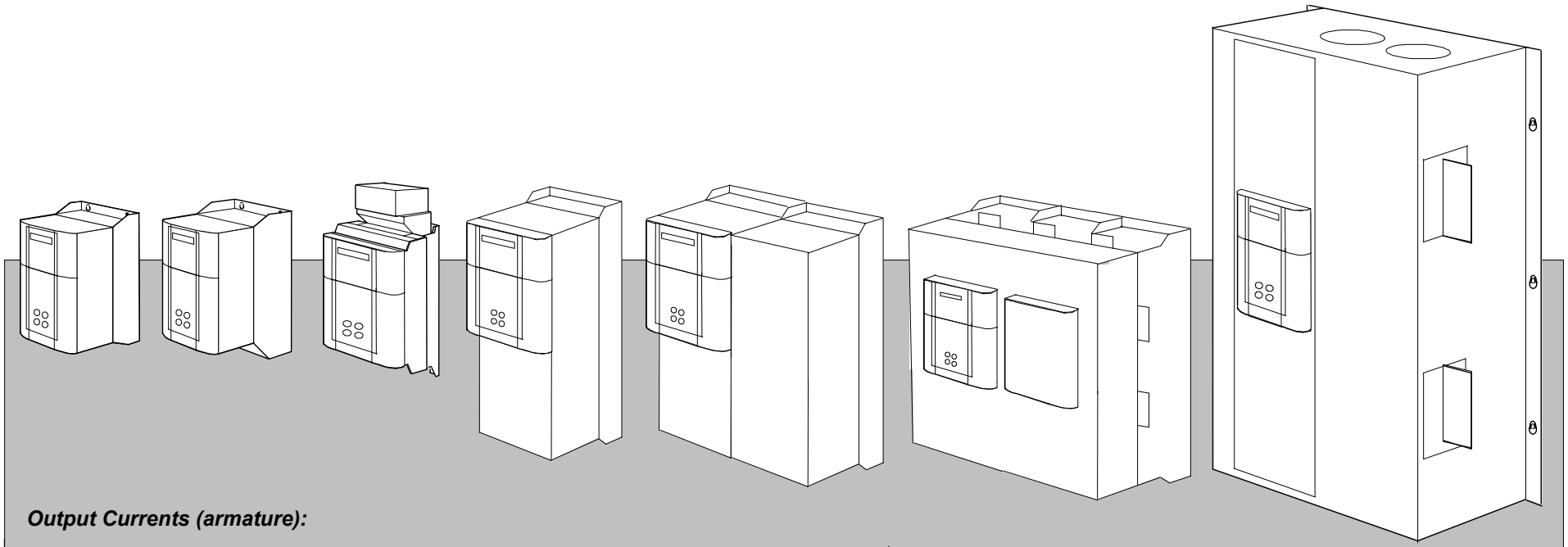

Output Currents (armature):

Frame 1	Frame 2	Frame 3	Frame 4	Frame 5	Frame 6	Frame H
15A 35A	40A 70A 110A 165A	180A 270A	380A 500A 725A 830A	1580A	1250A 1600A 1950A	1200A 1700A 2200A 2700A

All units are available as a:

590+ : 4Q 3-phase, fully controlled, anti-parallel thyristor bridge configuration

591+ : 2Q 3-phase, fully controlled thyristor bridge configuration

590+ Controller (Frames 1 & 2)

1	Main drive assembly
2	Terminal cover
3	Terminal cover retaining screw
4	Blank cover
5	6901 keypad (optional)
6	COMMS technology box (optional)
7	Speed feedback technology card (optional)
8	Gland plate
9	Power terminal shield
10	Power terminals
11	Control terminals
12	Earthing points
13	Keypad port
14	RS232 programming port
15	Auxiliary power, external contactor and isolated thermistor terminals

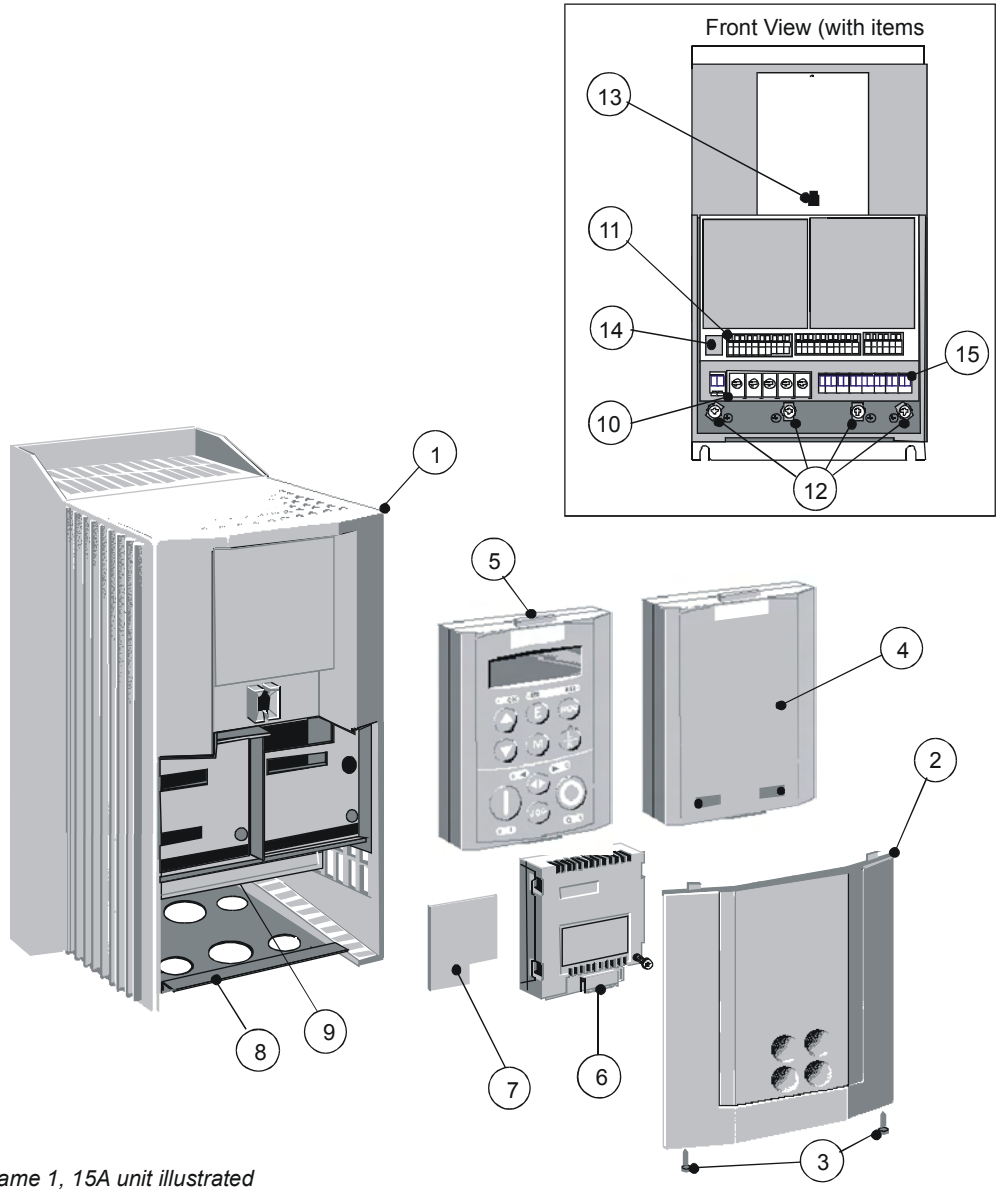

Frame 1, 15A unit illustrated

590+ Controller (Frame 3)

1	Main drive assembly
2	Door assembly
3	Field wiring terminals
4	Busbars - main power input
5	Busbars - main power output
6	IP20 Top Cover
7	IP20 Fan Housing (where fitted)

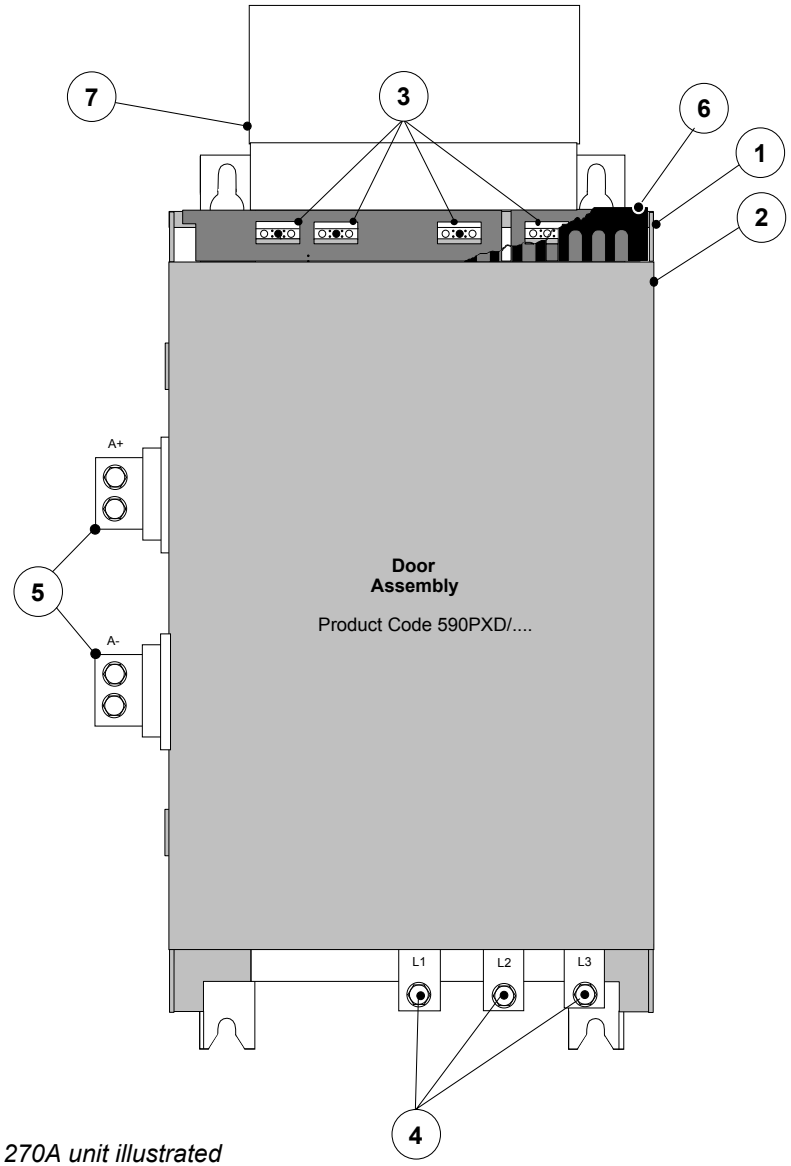

270A unit illustrated

590+ Controller (Frames 4 & 5)

1	Main drive assembly
2	Standard door assembly
3	Motor field terminals
4	Busbars - main power input
5	Busbars - main power output
6	Auxiliary supply, contactor and motor thermistor terminals
7	Frame 4 External vent (where fitted)
8	Contactor Control Select
9	Frame 5 External vent (where fitted)
10	Terminal Cover (Frame 5)

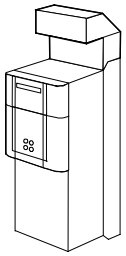

Frame 4

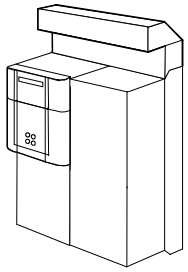

Frame 5

On the Frame 5,
both the Master and Slave drives must be individually earthed

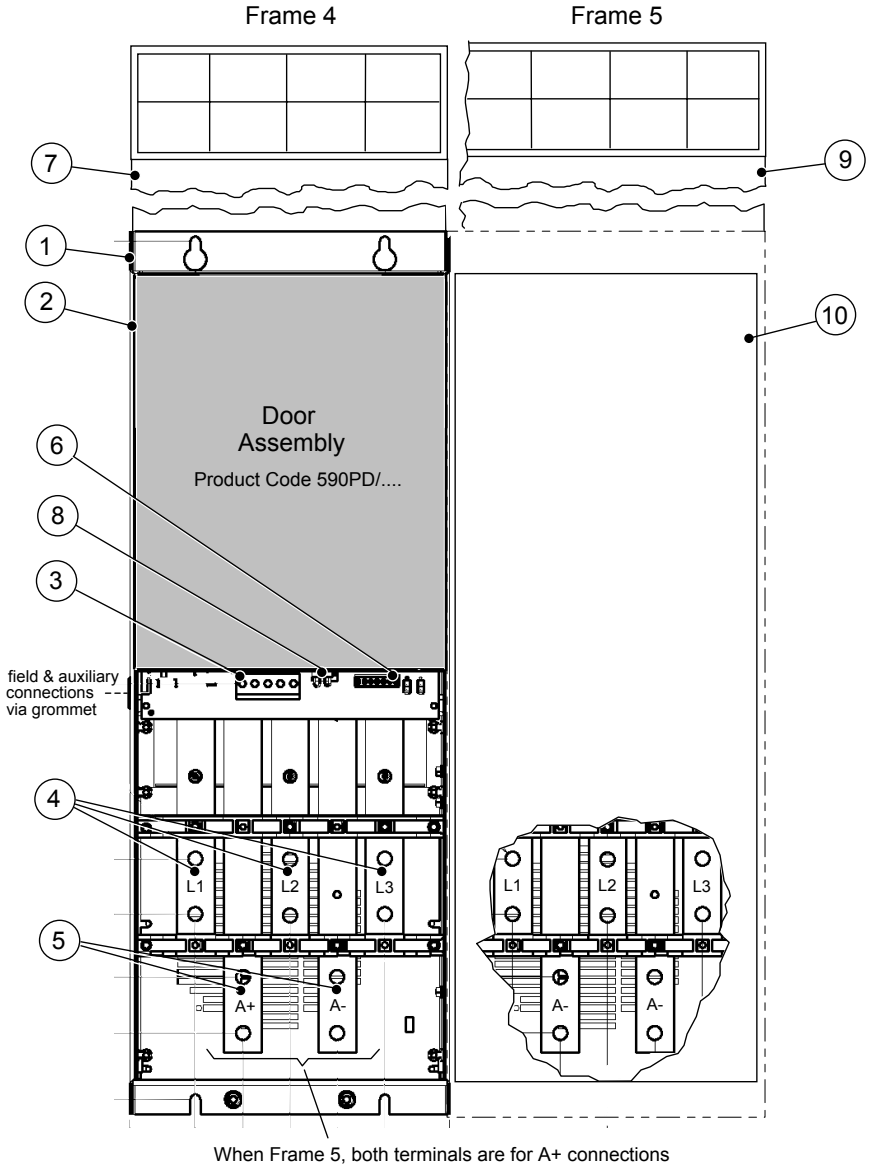

590+ Controller (Frame 6)

1	Phase assemblies - L1, L2, L3
2	Fishplate
3	Control Panel Assembly
4	Front Cover
5	Standard Door Assembly
6	Field Controller
7	Busbars - main power input
8	Busbars - main power output

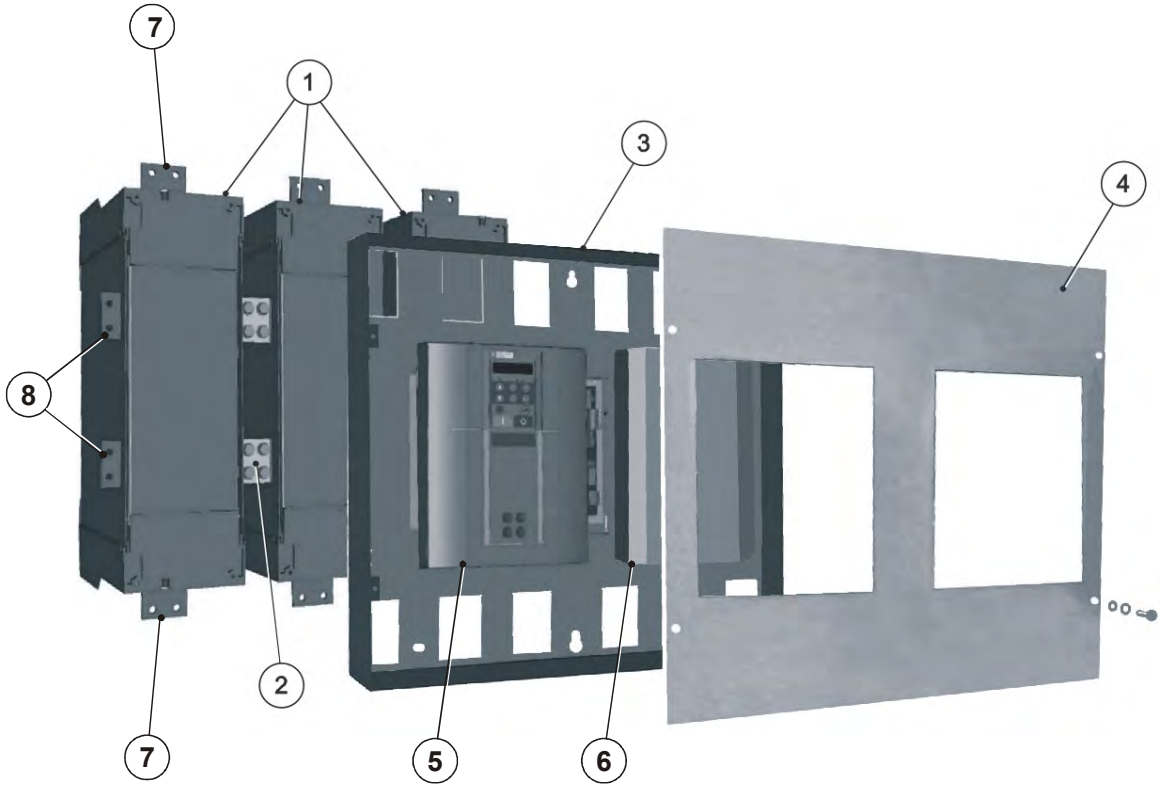

590+ Product (Frame H)

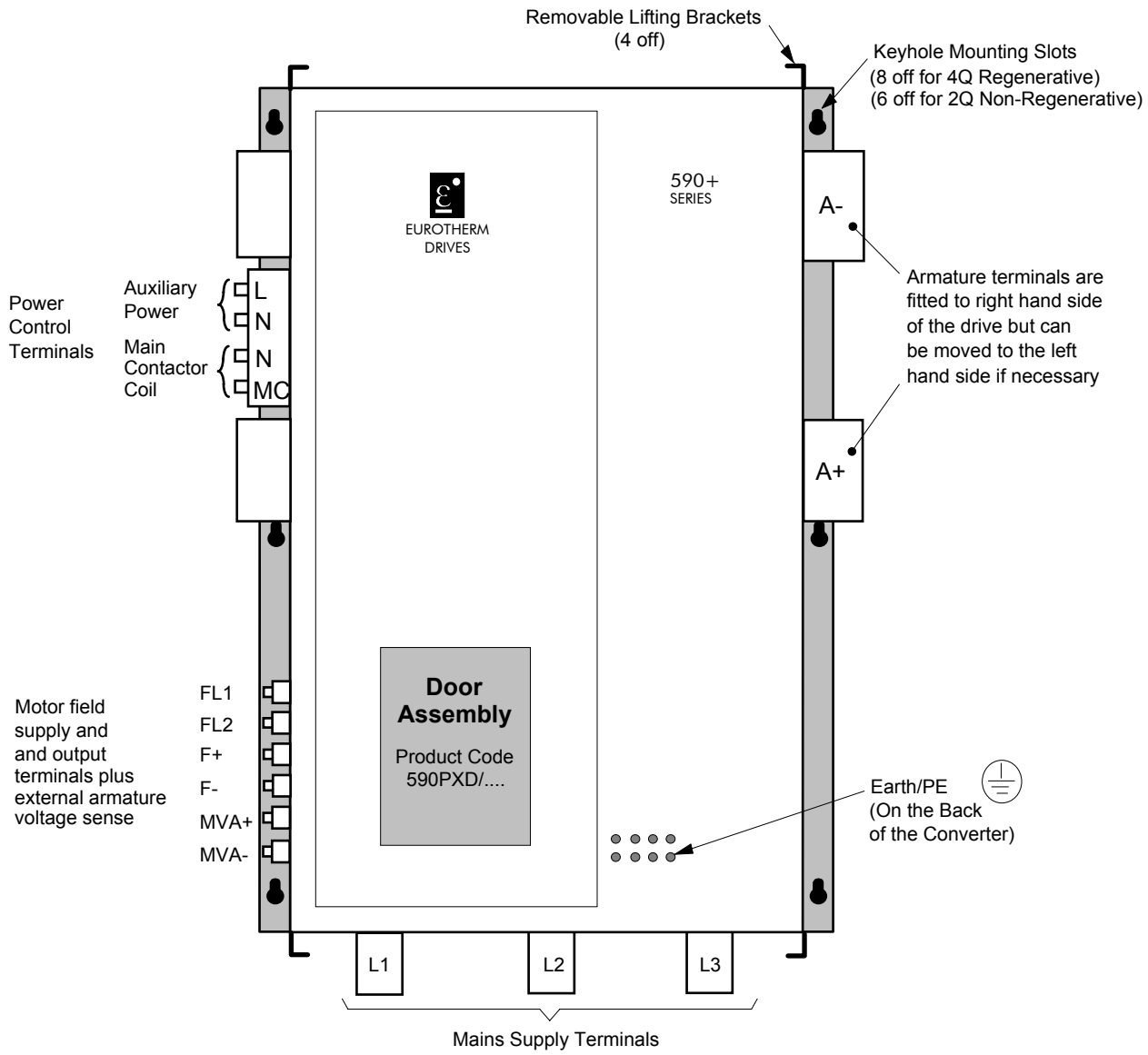

590+ Door Assembly (Frames 3, 4, 5, 6 & H)

1	Main door assembly
2	Terminal cover
3	Terminal cover retaining screw
4	Blank cover
5	6901 keypad (optional)
6	COMMS technology box (optional)
7	Speed feedback technology card (optional)
8	Control terminals
9	Keypad port
10	RS232 programming port (P3)

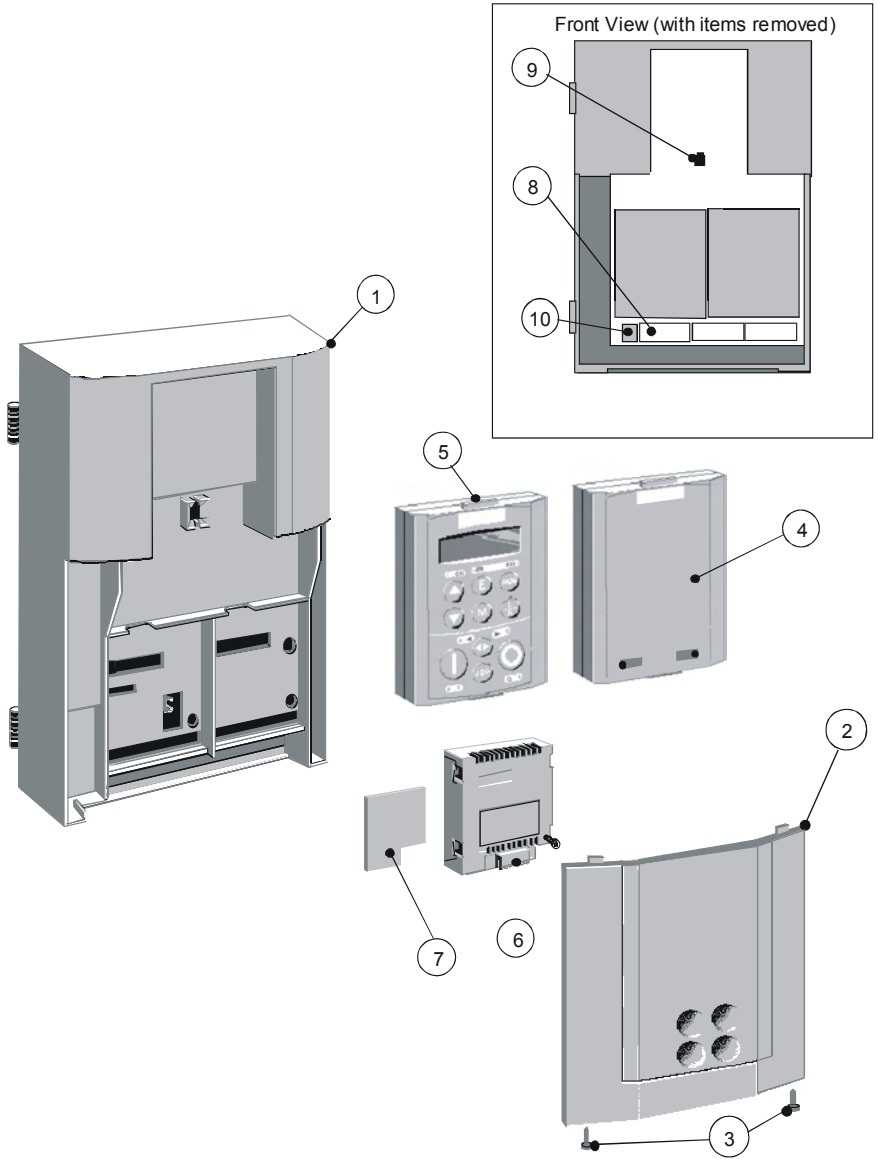

Frames 4 & 5 : Product Code 590PD/.... (illustrated)
Frames 3 & H : Product Code 590PXD/.... (with additional motor thermistor terminals)

How it Works

NOTE **Refer to Chapter 5: "Control Loops" for a more detailed explanation.**

In ***very*** simple terms, the drive controls the dc motor with the use of *Control Loops* - an inner Current Loop and an outer Speed Loop. These control loops can be seen in the Application Block Diagram. The block diagram shows all the drive's software connections.

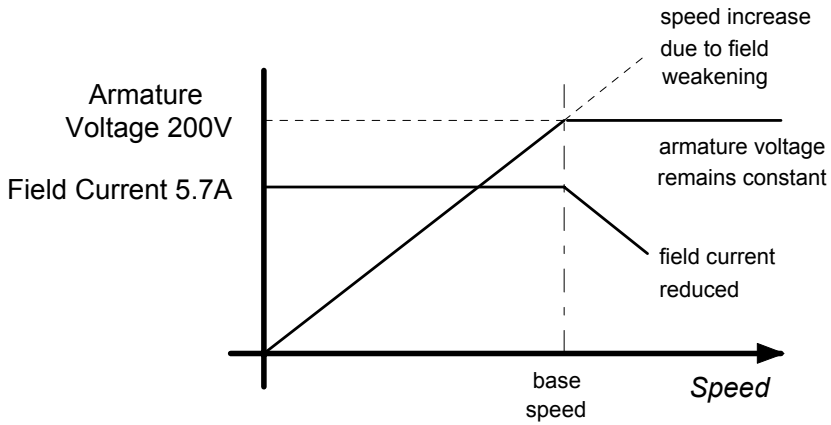

Using the Keypad, you can select the control loops to be used by the drive to provide either:

- Current Control
- Speed Control (default)

It is usual to supply a Current or Speed Feedback signal to the appropriate loop for more effective control of the drive. Current Feedback sensors are built-in, whereas Speed Feedback is provided directly from the armature sensing circuit (default), or by tachogenerator, encoder or Microtach connection to the relevant option board.

When in Speed Control, you can modify the performance of the drive further by controlling the motor field, i.e. Field Control. By weakening the field current, you can obtain an increase in motor speed beyond that normally achievable for the rated Armature Voltage of the dc motor.

The drive is controlled remotely using digital/analog inputs and outputs, or locally using the Keypad. By plugging in a COMMS Option Technology Box, the drive can be linked into a network and controlled by a PLC/SCADA or other intelligent device.

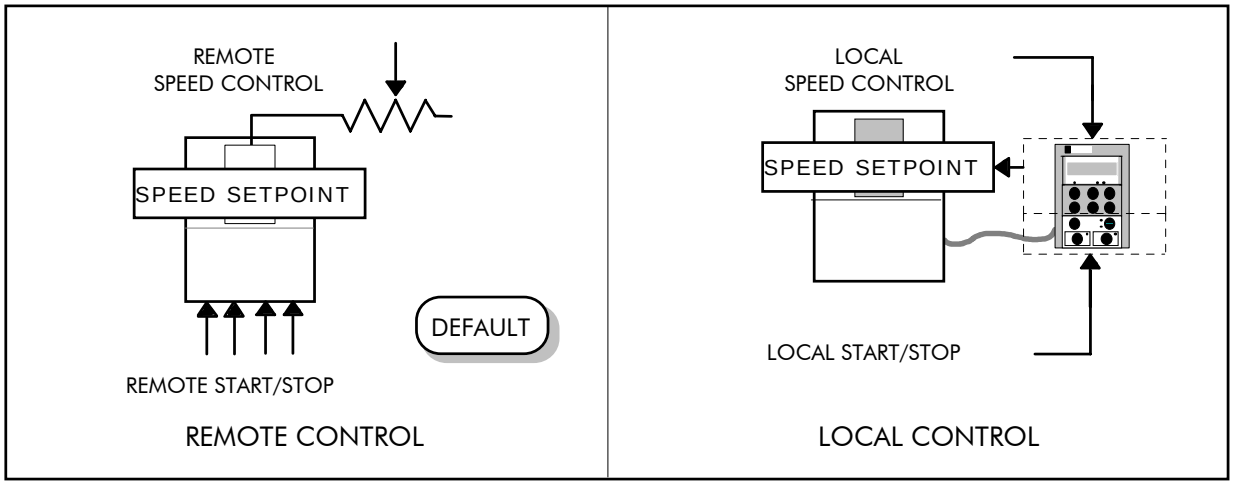

Control Features

Control	Control Circuits	Fully isolated from power circuit (SELV)
	Output Control	• Fully controlled 3-phase thyristor bridge • Microprocessor implemented phase control extended firing range • For use on 50 or 60Hz supplies with a frequency compliance range of 45 to 65Hz • Phase control circuits are phase rotation insensitive
	Control Action	• Fully digital • Advanced PI with fully adaptive current loops for optimum dynamic performance • Self Tuning Current Loop utilising "Autotune" algorithm • Adjustable speed PI with integral defeat
	Speed Control	• By Armature Voltage feedback with IR compensation • By Encoder feedback or analog tachogenerator
	Speed Range	100 to 1 typical with tachogenerator feedback
	Steady State Accuracy	• 0.01 % Encoder Feedback with Digital setpoint (serial link or P3) • 0.1 % Analog Tach Feedback • 2 % Voltage Feedback • Absolute (0.0% error) using QUADRALOC Mk II 5720 Digital Controller **NOTE Long term analog accuracy is subject to tachogenerator temperature stability.**
	Adjustments	All adjustments in software can be altered by the Keypad or via serial communications. The Keypad provides monitoring and adjustment of parameters and levels, in addition to diagnostic facilities.
Protection		• High energy MOVs • Overcurrent (instantaneous) • Overcurrent (inverse time) • Field failure • Speed feedback failure • Motor overtemperature • Thyristor Stack overtemperature • Thyristor "Trigger" failure • Thyristor Snubber Network • Zero-speed detection • Standstill logic • Stall protection
Diagnostics		• Fully computerised with first fault latch and automatic display • Digital LCD monitoring • Full diagnostic information available on RS422/RS485 • LED circuit state indication

Table 2-1 Control Features

Keypads

The drive is fitted with the 6901 Keypad.

It provides Local control of the drive, monitoring and complete access for application programming.

For example, you can start and stop the motor, check on diagnostic information, and change parameters values on the drive.

The keypad fits to the front of the drive, however, you can also remote-mount the keypad up to 3 metres away.

Alternatively, you can fit a 6911 keypad. The 6911 provides a larger screen and improved functionality.

For remote-mounting, you'll need the correct Remote Mounting Kit. Refer to Chapter 6: "The Keypad".

6901 Keypad

6911 Keypad

Option Boards

A range of Option Boards are available for the DC590+ drive. The boards provide for Speed Feedback and Communications.

Refer to Chapter 3 : "Installing the Drive" - Speed Feedback and Technology Options.

Chapter 3

Installing the Drive

This chapter describes the installation of the DC590+ drive and associated equipment.

Mechanical Installation 3-1
- Unpacking the Drive 3-1
- Lifting the Drive 3-1
- Mounting the Drive 3-5
- Ventilation and Cooling Requirements 3-6
- AC Line Choke 3-7
- Filtering 3-8

Electrical Installation 3-9
- Minimum Connection Requirements 3-11
- Connection Diagrams 3-13
- Power Connections 3-17
- Control Connections 3-22
- Motor Field Options 3-30
- Internal/External Supply (Frames 2, 3, 4 & 5) 3-30
- DC Contactor - External Va Sensing 3-34
- Power Board - PCB Reference 385851 (Frame 3) 3-34
- Power Board – PCB Reference 466701 (Frames 4 & 5) 3-35
- External Connections (Frames 6 & H) 3-36
- Power Board Circuit Descriptions 3-37
  - AH470280U001, U002, U003, U004 (Frame 1) 3-37
  - AH470330 (Frame 2) 3-39
  - AH385851U002, U003, U004, U005 (Frame 3) 3-41
  - AH466701U001, U002, U003 (Frames 4 & 5) 3-46
  - AH469419 (Frame 6) 3-49
  - AH466001U001, U101 (Frame H) 3-50

Optional Equipment 3-53
- Remote Mounting the Keypad 3-54
- Speed Feedback and Technology Options 3-56
- External AC Supply EMC Filter Installation 3-60
- Earth Fault Monitoring Systems 3-62

Frame 6: Assembly and Installation 3-63
- Assembly 3-65
- Electrical Installation 3-73

Frame H: Additional Information 3-74

Installation Drawings 3-75
- Drive Installation Drawings 3-75
- Filter Installation Drawings 3-87
- Line Choke Installation Drawings 3-94

Mechanical Installation

IMPORTANT ***Read Appendix B: "Certification" before installing this unit. Refer to "Installation Drawings", page 3-75 for further information. Note the additional information for Frame 6 and Frame H at the end of this Chapter.***

Unpacking the Drive

Caution

The packaging is combustible and this action may produce lethal toxic fumes.

Save the packaging in case of return. Improper packaging can result in transit damage.

Frame H Packaging

Large drives (Frame H) are supplied in special packaging bolted to a pallet with removable sides. Remove all fixings from the pallet.

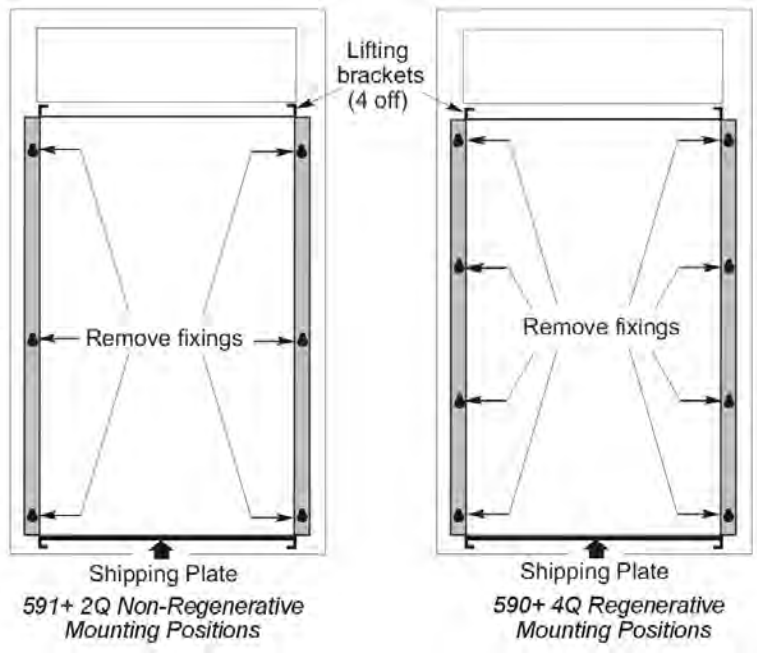

Figure 3- 1 Lifting Details (Frame H)

Lifting the Drive

Use a safe and suitable lifting procedure when moving the drive. Never lift the drive by its terminal connections. Prepare a clear, flat surface to receive the drive before attempting to move it. Do not damage any terminal connections when putting the drive down.

Frame 4 & 5 drives have lifting eyes and a shipping plate fitted to the base to enable the drive to be lifted into position, or to be set-on-end by a forklift. Remove the shipping plate before wiring the power terminals.

Frame H drives require the following:

- The drive is supplied with a lifting bracket fitted to each corner for hoisting. Remove the brackets when the drive is in its final position, however, **the bracket fixings MUST be re-fitted.** Refer to Appendix E: "Technical Specifications" - Termination Tightening Torques (Frame H).

- A shipping plate is fitted to the base to enable the drive to be set-on-end by a forklift. Remove the plate before wiring the power terminals.

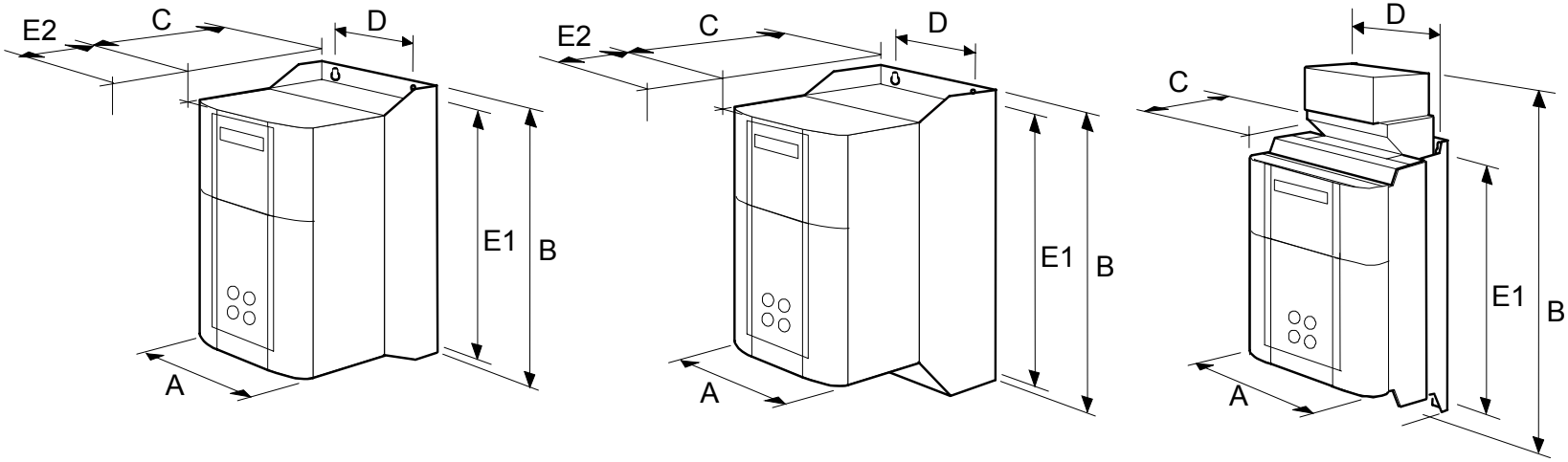

15A - 35A
Frame 1

40A - 165A
Frame 2

180A - 270A
Frame 3

Current Rating (A)	Weight in Kg (lbs)	Overall Dimensions			Fixing Centres	
		A	B	C	D	E1
15 - 35	6.4 (14)	200 (7.9)	375 (14.8)	220 (8.7)	140 (5.5)	360 (14.2)
40 - 165	10.5 (23)	200 (7.9)	434 (17.1)	292 (11.5)	140 (5.5)	418 (16.5)
180	20 (44)	250 (9.8)	485 (19.1)	234 (9.2)	200 (7.9)	400 (15.7)
270	20 (44)	300 (11.8)	485 (19.1)	234 (9.2)	200 (7.9)	400 (15.7)

Dimensions are in millimetres (inches)
Refer to "Installation Drawings", page 3-75.

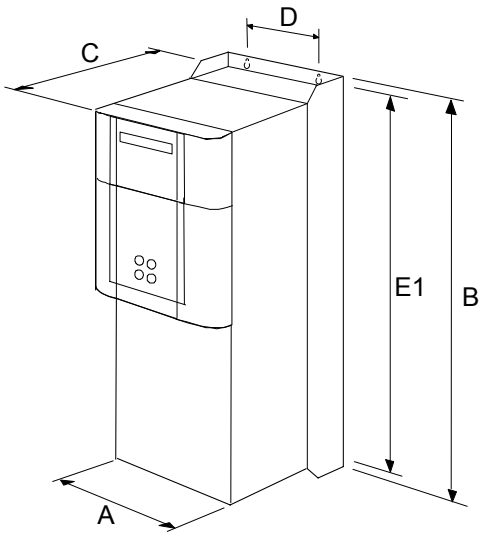

380A - 830A
Frame 4
(vent kit assemblies not shown)

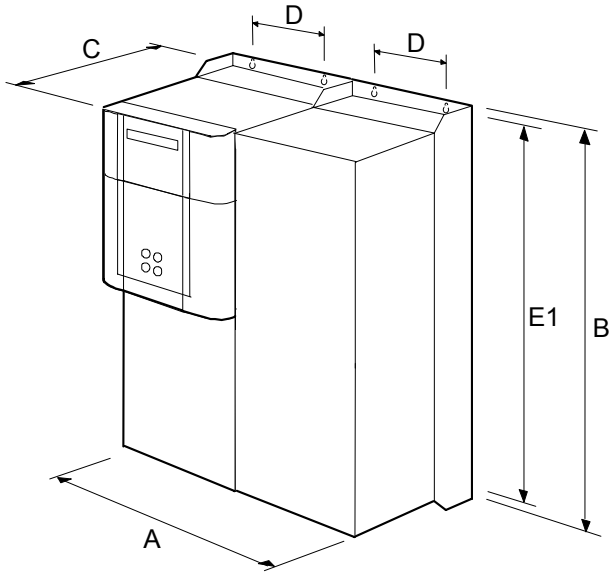

1580A
Frame 5
(vent kit assemblies not shown)

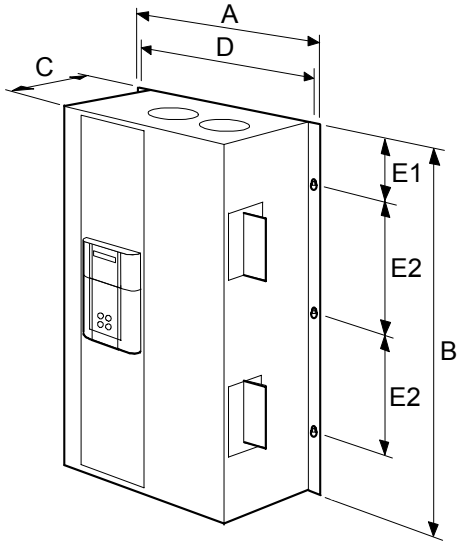

1200A - 2700A
Frame H

Current Rating (A)	Weight Kg (lbs)	Overall Dimensions			Fixing Centres		
		A	B	C	D	E1	E2
380	32 (71)	253 (10.0)	700 (27.6)	358 (14.2)	150 (5.9)	680 (26.8)	-
500	32 (71)	253 (10.0)	700 (27.6)	358 (14.2)	150 (5.9)	680 (26.8)	-
725	44 (97)	253 (10.0)	700 (27.6)	358 (14.2)	150 (5.9)	680 (26.8)	-
830	44 (97)	253 (10.0)	700 (27.6)	358 (14.2)	150 (5.9)	680 (26.8)	-
1580	90 (200)	506 (20.0)	700 (27.6)	358 (14.2)	150 (5.9)	680 (26.8)	-
1200 - 2700	See *	850 (33.5)	1406 (55.3)	417 (16.4)	810 (31.9)	78 (3.1)	4 x 400 (15.7)
1200 - 2700	See *	850 (33.5)	956 (37.6)	417 (16.4)	810 (31.9)	78 (3.1)	3 x 400 (15.7)

*590+ drive weighs 270Kg (595.4 lbs) without packaging and fan assembly
591+ drive weighs 160kg (352.8 lbs) without packaging and fan assembly
Fan weighs 18.5Kg (40.8 lbs)
Dimensions are in millimetres (inches)
Refer to "Installation Drawings", page 3-75.

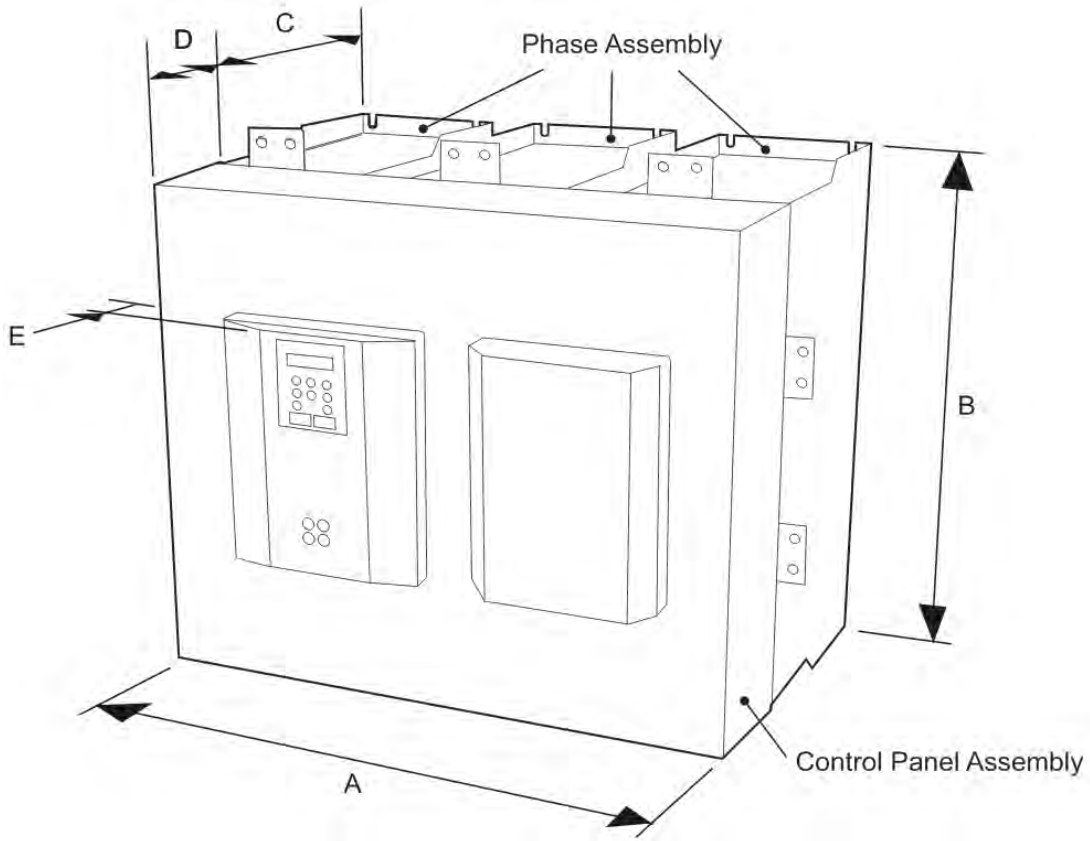

1250 - 1950A
Frame 6

A	B	C	D	E
686 (27.00)	715 (28.15)	378 (14.88)	62 (2.44)	57 (2.24)
Dimensions are in millimetres (inches)				

Weights:		
Control Panel Assembly	11.25kg (25 lbs)	The DC590+ Frame 6 drive is assembled *in-situ*. Refer to "Frame 6: Assembly and Installation" page 3-63 for detailed build instructions.
Regen Phase Assembly (4Q)	33kg (73 lbs) each	
Non-Regen Phase Assembly (2Q)	28kg (62 lbs) each	

Mounting the Drive

NOTE **General installation details are given below for mounting the Drive, however, if you are installing the unit with an EMC filter refer to "External AC Supply EMC Filter Installation, page 3-60.**

Mount the unit vertically on a solid, flat, vertical surface. It is mounted using bolts or screws into four fixing points (keyhole slots). The design allows the use of 100mm grid fixing.

It must be mounted inside a suitable cubicle. To comply with the European safety standards VDE 0160 (1994)/EN50178 (1998), the cubicle must require a tool for opening.

NOTE **Holes for the mounting bolts or screws must be placed accurately.**

Cover any units all ready mounted to the panel to protect them from stray metal filings while drilling mounting holes.

General Mounting Hints

Caution

Use proper lifting techniques when lifting and moving.

Drill the mounting holes into the backplate. The holes must be positioned accurately. Fit the nut inserts. Fit bolts and washers into the top inserts so that the drive can be hung using the keyhole slots.

Hang the drive on the bolts, between the panel and washers you have just fitted. Fit bolts and washers to the lower nut inserts. Finally, use the socket wrench to tighten all nuts securely.

Check the drive and its housing for packing material, mounting debris, or any other material that could damage and/or restrict the operation of the equipment.

Recommended Tools

Socket wrench	With a 6 Inch extension
Deep sockets	M6, M10, M13, M17, 7/16", 1/2"
Screwdrivers	Phillips No.2, flat blade - 0.5 x 3.0mm, 0.8 x 4.0mm
Wire cutters	Small

Ventilation and Cooling Requirements

NOTE **When fitting a drive into a sealed enclosure additional cooling MUST be provided, otherwise the internal air will overheat causing the drive to trip on "overtemperature".**

Refer to Appendix E: “Technical Specifications” - Cooling Fans.

The Drive gives off heat during normal operation and must therefore be mounted to allow the free flow of air through the air entries and exits. Maintain the minimum air clearances given on the drawings to ensure that heat generated by other adjacent equipment is not transmitted to the Drive. Be aware that other equipment may have its own clearance requirements. When mounting two or more DC590+’s together, these clearances are cumulative.

Ensure that the mounting surface is normally cool.

Installing the Fan (Frame H)

Refer to Appendix E: “Technical Specifications” - Cooling Fans.

The fan unit supplied should be installed on the cubicle, with or without ducting (refer to the Installation Drawing). The drive is force-cooled using the fan units supplied with the drive. As a general rule allow at least 150mm (6 inches) of clear space above and below the drive for free air flow. We suggest the cubicle has an air inlet at the base of the cubicle equivalent to 0.37m^2 (4ft^2), variable depending upon the filter type used, to allow the maximum throughput of air.

The fan assembly provided is permanently wired as shown below.

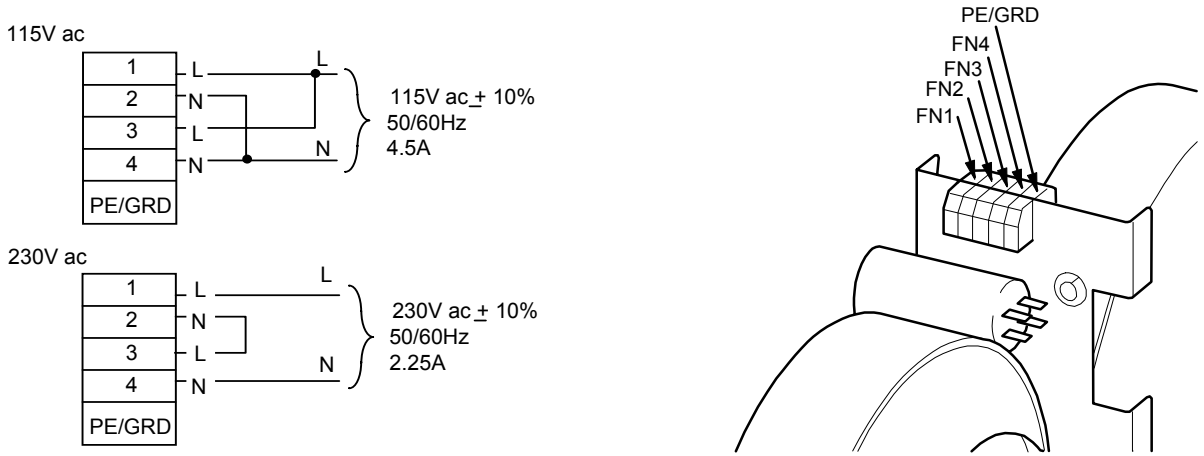

Figure 3- 2 Frame H Fan Wiring Diagram

Installing the External Vent Kit (Frames 4 & 5)

Parker SSD Part Drives Numbers:

Frame 4 : LA466717U001

Frame 5 : LA466717U002

Refer also to page 3-80 and page 3-85.

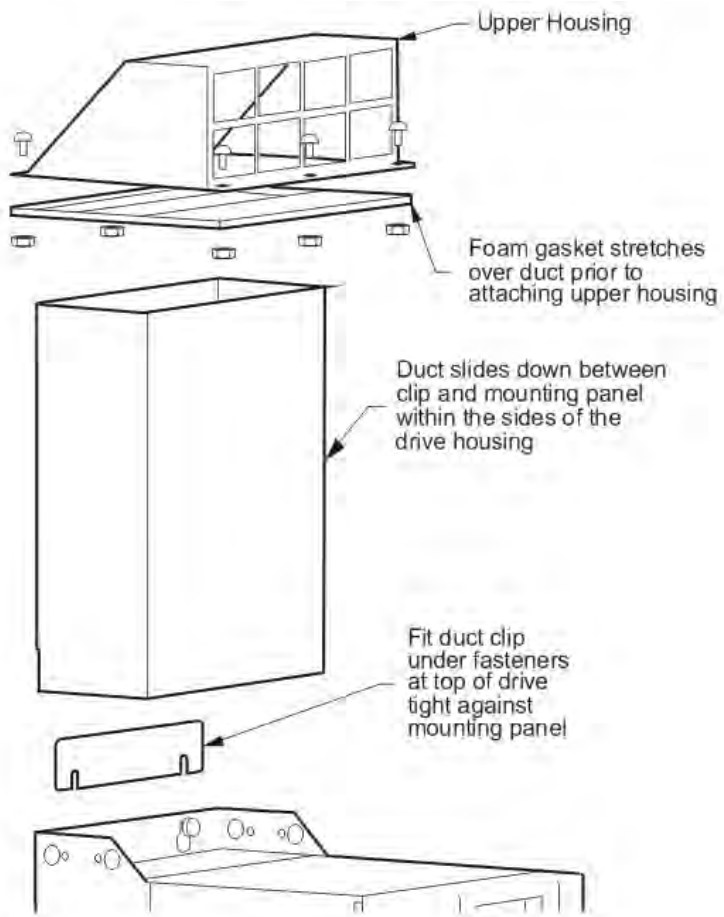

Figure 3- 3 Frames 4 & 5 External Vent Kit

AC Line Choke

We recommend that you always use the specified ac line choke with the Drive
to provide a known supply impedance for effective operation of the thyristor transient suppression circuits. At least 1% line impedance should be provided in the supply side of the drive.

Refer to Appendix E: “Technical Specifications” - AC Line Choke for selection details.

Filtering

NOTE **Refer to Appendix B: "Certification" - EMC.**

For compliance in Europe with EN61800-3 Table 11:

- The CE marking of drives whose armature current >100A is applicable without filtering.
- The CE marking of drives whose armature current <100A is **only** applicable with filtering. The drive requires one of the following:
  1. The specified filter given in Appendix B
     (also refer to External AC Supply EMC Filter Installation, page 3-60)
  2. Compliant filtering offered by the System
  3. Capacitors fitted between phase and earth (see Figure 3- 4 below)

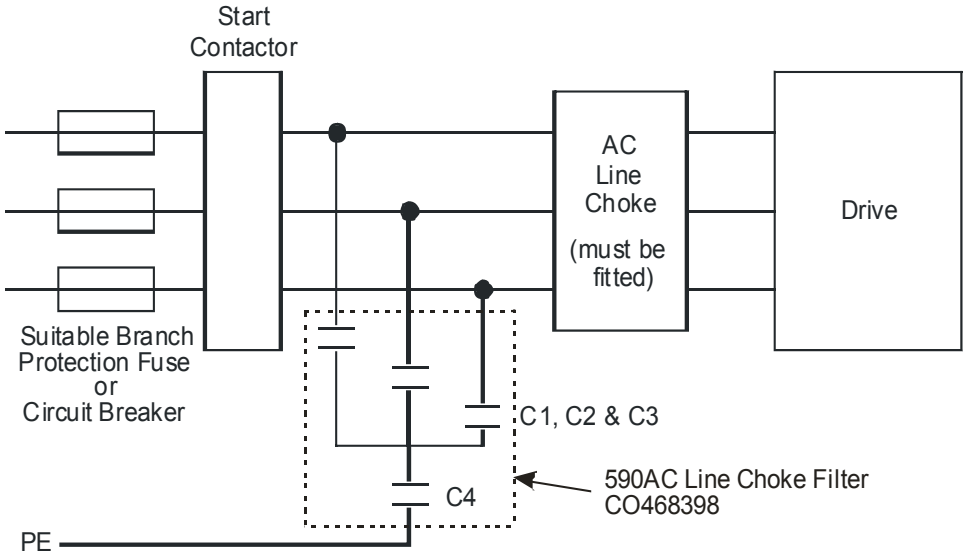

Capacitor Reference Number	Capacitor Value/Type
C1, C2, C3	3.0µF 400V, EMI suppressor type Class X1
C4	1.0µF 400V, EMI suppressor type Class X1

Figure 3- 4 AC Line Choke and Capacitors fitted to Frame 1 (15A & 35A) & Frame 2 (40A & 70A) Drives

Electrical Installation

IMPORTANT ***Please read the Safety Information on page Cont. 3 & 4 before proceeding.***

WARNING

Ensure that all wiring is electrically isolated and cannot be made "live" unintentionally by other personnel.

NOTE **Refer to Appendix E: "Technical Specifications" for additional *Wiring Requirements for EMC Compliance* and *Wire Sizes and Termination Tightening Torques*.**

Cables are considered to be electrically *sensitive*, *clean* or *noisy*. You should already have planned your cable routes with respect to segregating these cables for EMC compliance.
If not, refer to Appendix B: "Certification".

If the controller is to be operating in a regenerating mode for extended periods acting as a load generator for another machine, it is advisable to fit additional protection in the armature circuit. A dc fuse or high speed circuit breaker will provide this protection. If in doubt, contact Parker SSD Drives.

If fitted, the AC filter MUST be placed between the supply and the choke.

Failure to do so will result in unreliable operation of the drive and reduced lifetime of the filter.

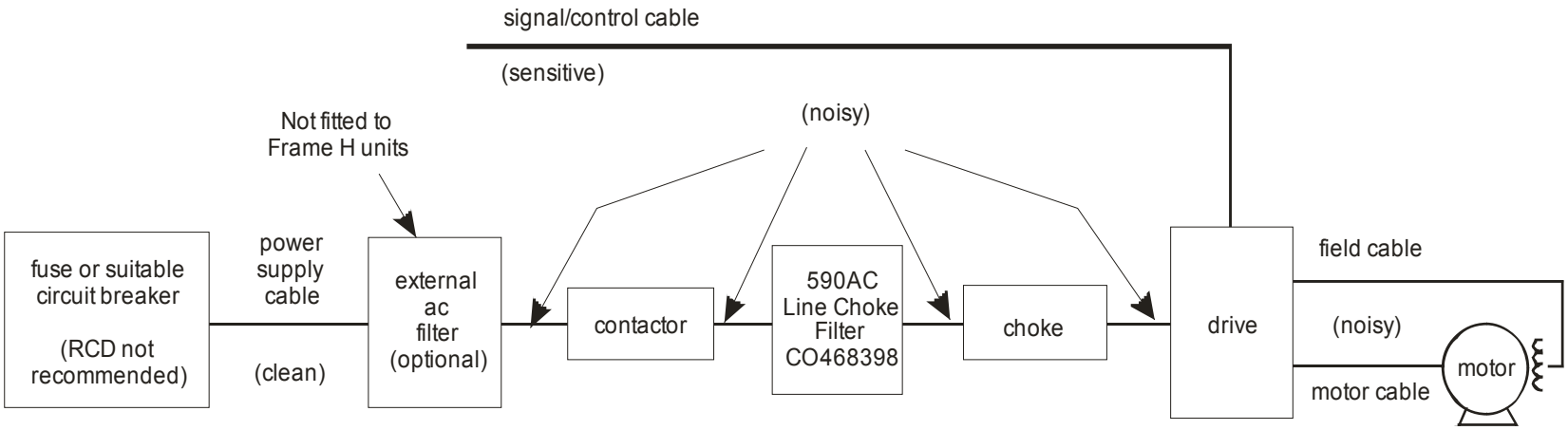

Figure 3- 5 Cabling Requirements

Cable Gland Requirements

Use a metal gland to connect to the cubicle backplate, near the VSD (variable speed drive). It must be capable of securing a 360 degree screened connection to give EMC compliance. A 360 degree screened connection can be achieved as shown.

We suggest a rubber grommet is fitted on holes where a cable gland is not used.

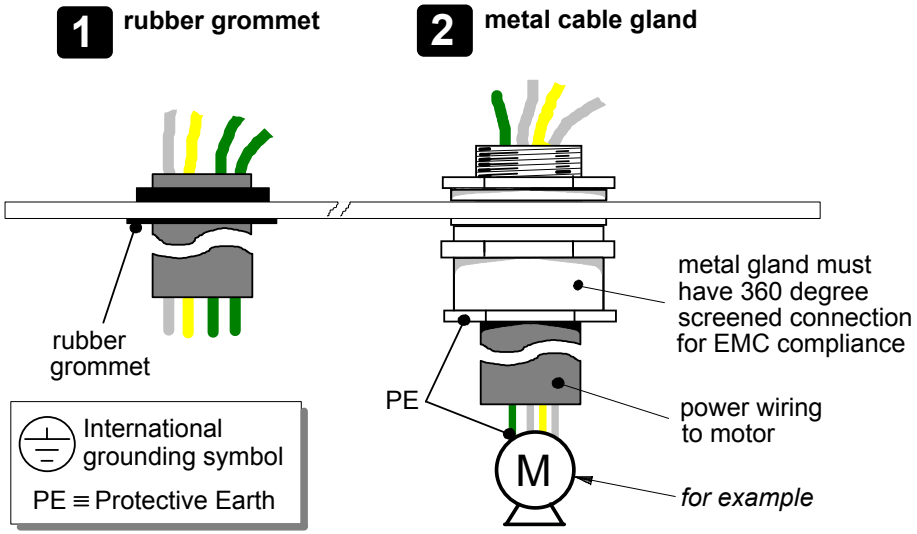

Figure 3- 6 Cable and Screen Fixings

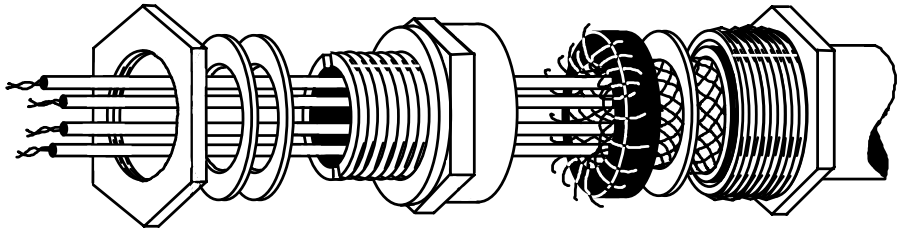

Figure 3- 7 360 Degree Screened Connection

Minimum Connection Requirements

IMPORTANT ***If in doubt about the connection of the DC motor to the drive, contact Parker SSD Drives.***

NOTE **Because of the complexity of showing all possible configurations, this Chapter deals only with a `general purpose' operation as a basic speed controller. Special wiring options usually form part of a customer-specific system and connection details will be provided separately.**

Minimum connections to operate the drive safely are shown using bold lines in the following circuit diagrams. These connections are highlighted in text with the symbol opposite. The remaining connections are not necessary for a "quick start-up".

The Drive is using the default Armature Voltage feedback when following the `minimum connection' instructions.

WARNING

Power terminals carry an electrical voltage which can be lethal. Never work on any control equipment or motors without first removing all power supplies from the equipment.

Caution

Make sure all wiring connections meet or exceed applicable local and National Electrical Codes. Be sure to fit branch circuit and motor overload protection.

IMPORTANT ***If fitting your own "Power On" indicator lamp, annunciator, etc., this should be switched by an auxiliary contactor of the main contactor, not by the controller auxiliary relay.***

To avoid damaging the drive NEVER carry out high voltage resistance or dielectric strength tests without first completely disconnecting the drive from the circuit being tested.

Power Cables

NOTE **Refer to Appendix E: "Technical Specifications" - Wire Sizes and Termination Tightening Torques.**

- minimum rating of 1.1 x full load current (Europe)
- minimum rating of 1.25 x full load current (UL)

Control Wiring

NOTE **Refer to Appendix E: "Technical Specifications" for Control Terminal information.**

- Control wiring must have a minimum cross-section area of 0.75mm^2 (18AWG).
- Use screened control cables to comply with EMC requirements.
- Feed the control cables into the drive and connect to the control terminals. Refer to the connection label on the inside of the terminal cover. Close the terminal cover.

IMPORTANT ***All connections made to terminal blocks A, B and C must be isolated signal voltages.***

Important Connections

The following connections must be made for the drive to run:

- Terminals TH1 and TH2 must be linked if a motor thermostat is not fitted.
- Terminals C1 and C2 must be linked if an External Trip interlock is not required.

Connection Diagrams

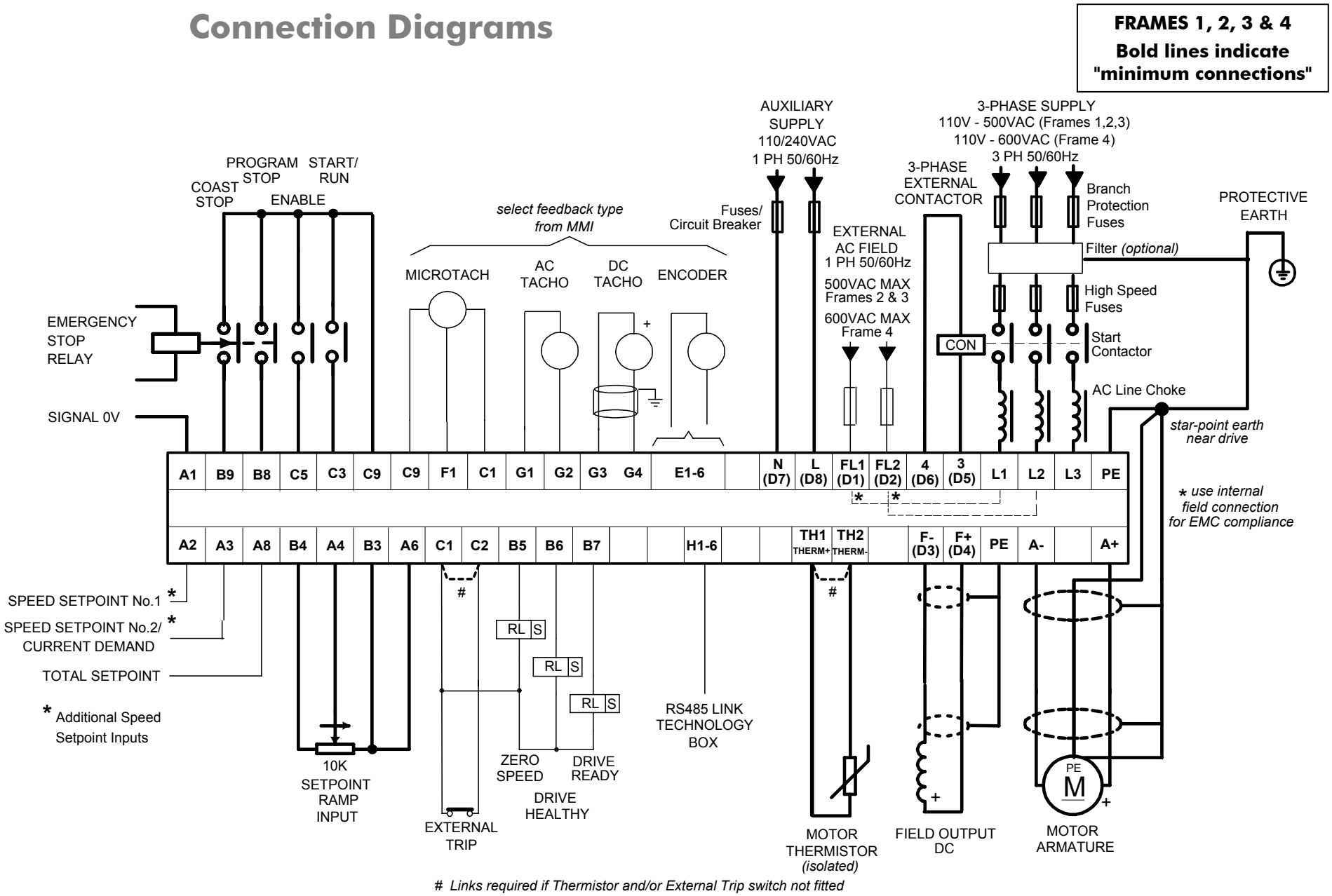

Figure 3- 8 Power Connections: Frames 1, 2, 3 & 4 (`general purpose' configuration)

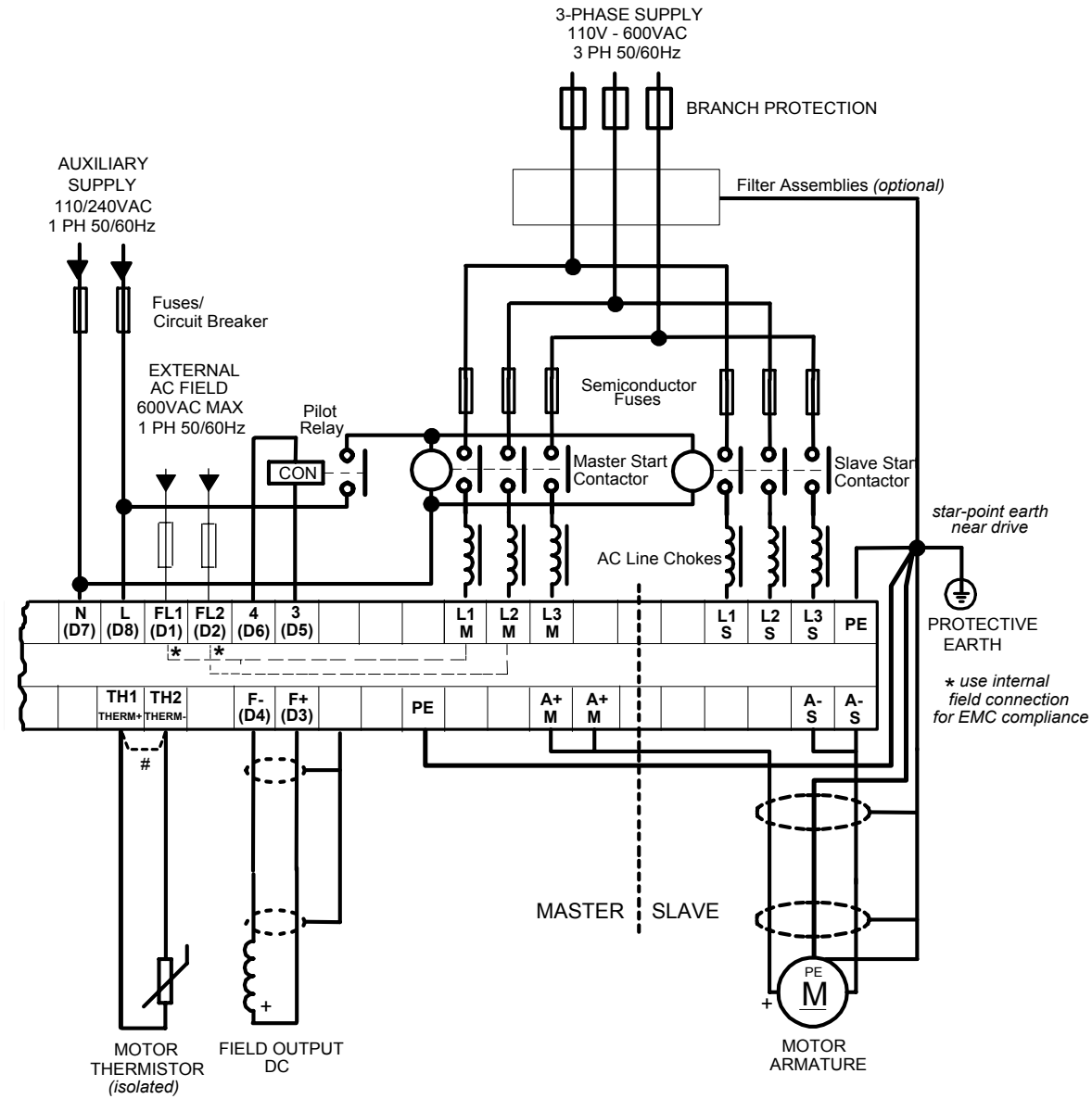

FRAME 5
Bold lines indicate "minimum connections"

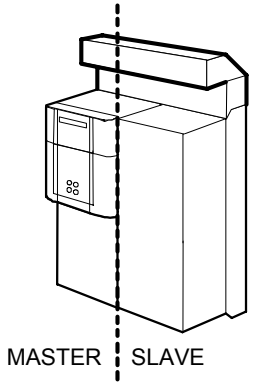

Notes:

a) You must use two identical line chokes to guarantee sharing of motor current

b) One or two Start Contactors can be used

c) Use separate semiconductor fuses for Master and Slave

d) L1M, L2M & L3M are the Master AC Input Busbars
L1S, L2S & L3S are the Slave AC Input Busbars
There are two A+M Master DC Output Busbars
There are two A-S Slave DC Output Busbars

e) Use both of the A+M terminals, and also both A-S terminals

f) PE connections MUST be made to both the Master and Slave drives

g) A single dc contactor can be fitted but MUST be used with an interlock to enable input C5

Figure 3- 9 Power Connections: Frame 5 (`general purpose' configuration)

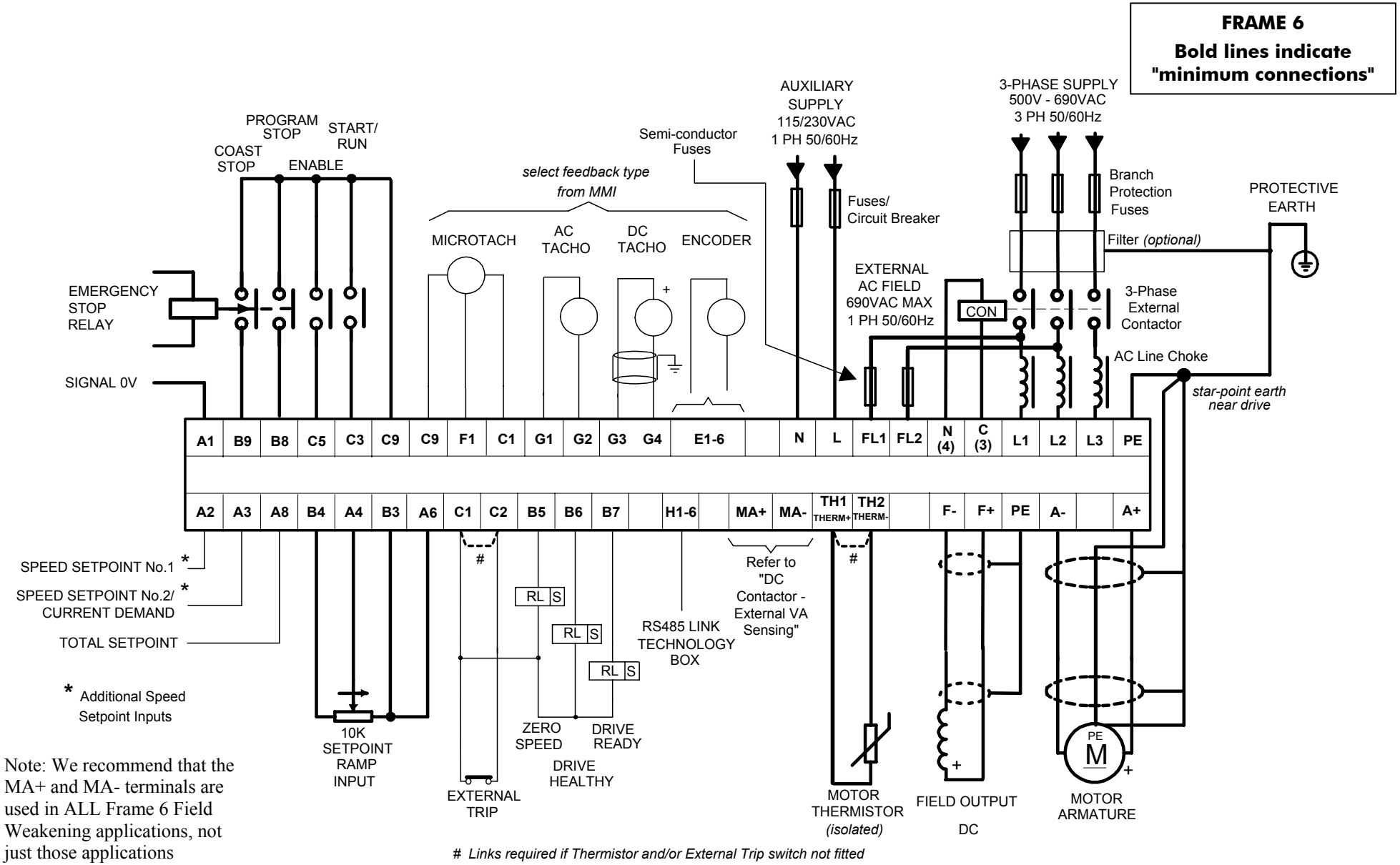

Note: We recommend that the MA+ and MA- terminals are used in ALL Frame 6 Field Weakening applications, not just those applications involving an external DC contactor.

Figure 3- 10 Power Connections: Frame 6 (`general purpose' configuration)

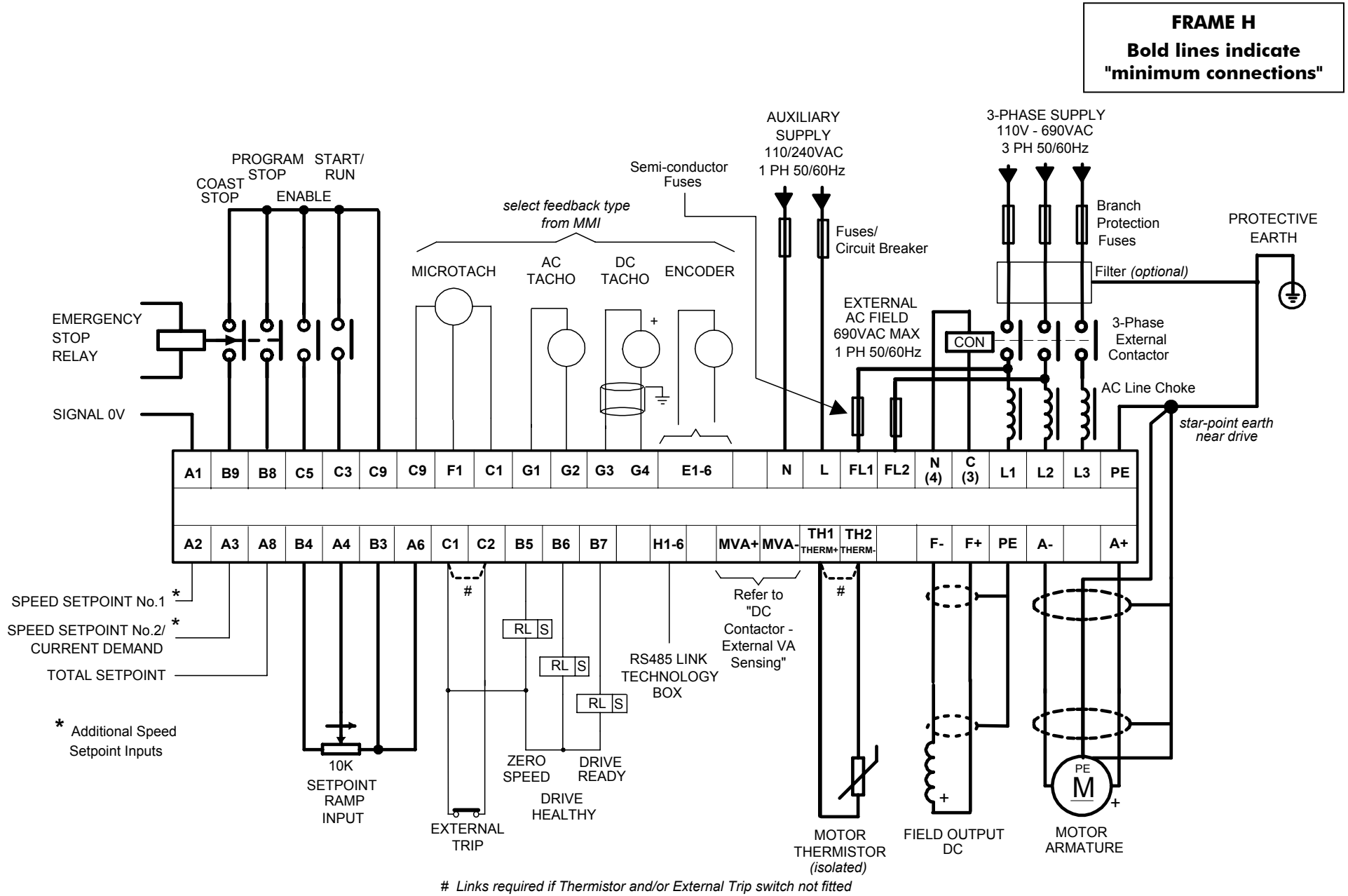

Figure 3- 11 Power Connections: Frame H (`general purpose' configuration)

3-Phase Supply, 3-Phase External Contactor

L1
L2
L3
3
4

Connect the main ac power to busbar terminals L1, L2 & L3 via the Branch Protection, AC Filter (optional), 3-Phase External Contactor, and AC Line Choke.

Connect the contactor coil to terminals 3 (Line) and 4 (Neutral).

Frame 3: Terminals 3 & 4 = D5 & D6 : Frame H & Frame 6: Terminals 3 & 4 = C & N

Main AC Power

There is no specific phase connection to terminals L1, L2 and L3 as the controller is phase rotation independent.

Branch Protection

AC current = 0.83 x DC Armature Current

You must provide branch circuit protection using a suitable fuse or Type 2 circuit breaker (RCD, ELCB, GFCI circuit breakers are not recommended, refer to “Earth Fault Monitoring Systems”, page 3-62). Also refer to Appendix B: “Certification” - Conditions for Compliance with UL508c.

Semi-Conductor Protection

Frame H drives contain high speed semi-conductor fuses. For all other frame sizes, always provide high-speed thyristor fusing to protect the thyristor stack in the case of direct output short circuits. Semiconductor fuses may be used as Branch Protection on single-drive systems.

IMPORTANT ***If a motor becomes completely short-circuited, the current trip (OVER I TRIP)*** *will not* ***protect the Drive.***

Refer to Appendix E: “Technical Specifications” - External Power Semiconductor Protection Fuses.

AC Filter (optional)

Refer to "External AC Supply EMC Filter Installation", page 3-60.

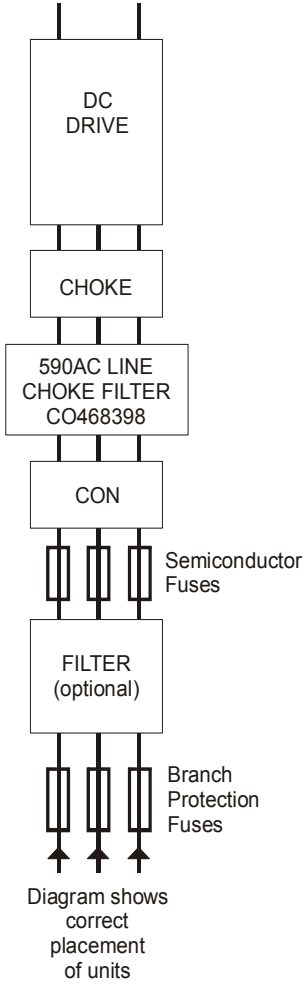

Power Connections continued

3-Phase Supply, 3-Phase External Contactor continued

3-Phase External Contactor

The contactor does not switch current and is primarily for disconnection and sequencing of the power bridge. It must be energised directly from the controller by a coil with a rating suitable (AC1) for the controller concerned. No additional series contacts or switches are permitted since they will interfere with the sequencing of the controller and cause unreliability and possible failure.

Connect to main contactor terminals Con L and Con N only as described in Appendix E, otherwise unreliable or dangerous operation may occur - do not connect to a PLC input or sensitive relay.

Slave Relay : If the 3-phase contactor has a coil with an inrush greater than 3A, a slave relay **MUST** be used to drive the contactor coil. The contactor and slave relay (if required) **MUST** have coil voltages compatible with the controller auxiliary supply voltage.

DO NOT use a slave relay with a coil current less than 25mA as it may be energised by the contact suppression network.

Frames 4 & 5 : A relay jumper (CONN1) is provided on the power board enabling terminals 3 & 4 to be powered (auxiliary supply - default position), or to be volt-free (for customers own contactor supply). Refer to "AH466701U001, U002, U003 (Frames 4 & 5)", page 3-46.

DC Contactor : A DC contactor can be used but the sequencing must be adjusted to accomodate its use: an auxilliary normally open volt-free contact of the contactor must be connected in series with the "ENABLE" input (C5) to disable the drive until after the contactor is closed.

AC Line Choke

IMPORTANT ***Always fit the recommended choke. Refer to Appendix E: "Technical Specifications" - AC Line Choke.***

We can provide suitable chokes, designed to connect directly to the drive terminals. Refer to Appendix E: "Technical Specifications" - AC Line Choke.

PE Protective Earth Connections

Connect the drive's PE terminal to an independent earth/ground star point.

Connect this earth/ground star point to Protective Earth.

IMPORTANT ***The drive and filter (if fitted) must be*** *permanently earthed.* ***Each conductor used for permanent earthing must*** **individually** ***meet the requirements for a protective earth conductor.***

For installations to EN 60204 in Europe:

- For permanent earthing, the drive requires either two individual incoming protective earth conductors (<10mm² cross-section), or one conductor (≥10mm² cross-section) connected to an independent protective earth/ground point near the drive.
- Run the motor protective earth/ground connection in parallel with the motor supply conductors, ideally in the same conduit/screen/armour, and connect to an independent protective earth/ground point near the drive.

Refer to Appendix B: “Certification” - EMC General Installation Considerations.

Caution

On the Frame 5, both the Master and Slave drives must be individually earthed.

A+ A- Motor Armature

Connect the motor armature to terminals A+ and A-.

Connect the cable screen to the motor's PE terminal and the earth/ground star point.
Connect the motor's PE terminal to the earth/ground star point.

For cable information refer to Appendix B: "Certification" - Recommended Wire Sizes.

NOTE **If the drive is to operate in regenerating mode for long periods, it is advisable to fit a dc fuse or high speed circuit breaker in the armature circuit. If in doubt consult Parker SSD Drives.**

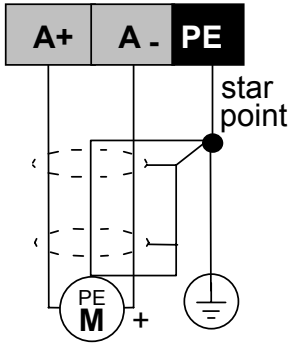

Power Connections continued

F- F+

Motor Field

Connect the motor field (-) to terminal F-, and connect field (+) to terminal F+.

Frame 3: Terminals F- & F+ = D3 & D4

Connect the cable screen to the independent earth/ground point.
If the motor has no field connections, is a permanent magnet motor, or if the field is derived externally, you must either:

disable the FIELD ENABLE parameter (Tag No. 170) later during Set-up (disables the Field Fail alarm automatically)

or

disable the Field Fail alarm

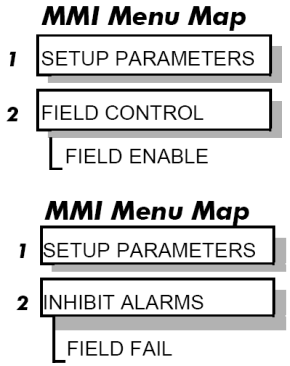

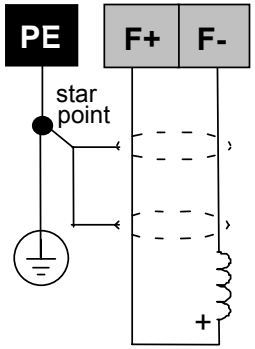

Th1 Th2

Motor Thermistor

Connect the motor thermistor to terminals Th1 and Th2

or

link terminals if sensors are not fitted.

Frames 3, 6 & H: Terminals Th1 & Th2 = THERM1 & THERM 2

Terminals Th1 and Th2 must be linked if motor sensors are not fitted.

(Thermistor terminals for Frames 3, 6 & H are on the Control Door Board).

We recommend that you protect the dc motor against overtemperature by the use of temperature sensitive resistors or switches in the field and interpole windings of the machine. When the motor is fitted with over-temperature sensing devices, such as thermostats or PTC thermistors, these should be connected (in series) between terminals TH1 and TH2.

- Thermistors must have a combined working resistance of 750Ω or less, rising to 4kΩ at over-temperature. These thermistors are classified by IEC34-II as Mark A.
- Temperature switches must be normally closed, and open at rated temperature.

The over temperature alarm will activate at 3kΩ. It is latched in software and must be reset by re-starting the Drive.

NOTE **The motor temperature alarm (THERMOSTAT) cannot be inhibited in software.**

FL1 FL2	**External AC Field**	These terminals must be used on Frame 6 and Frame H drives ☐ ✔
	Connect the external field supply to terminals FL1 and FL2.	Frame 3: Terminals FL1 & FL2 = D1 & D2 (Not available on Frame 1 units) Used if an external field supply is required to the controller for application reasons. The magnitude of this voltage is determined by the desired field voltage. The supply must be protected externally with suitable fuses. **IMPORTANT** ***The connection of the controller and the external field supply must be consistent when using an externally supplied field regulator. Always derive the 1phase, 50/60Hz supply from the L1 (Red) and L2 (Yellow) phases of the main power supply, directly or indirectly through a single-phase transformer, with the Red phase connected to terminal FL1 and the Yellow phase to terminal FL2.*** **NOTE** **You must provide branch circuit and overload protection.** To change the drive from an internal to an external field type refer to "Motor Field Options", page 3-30.
L N	**Auxiliary Supply**	☐ ✔
	Connect the control supply to terminals L (Live) and N (Neutral).	Frame 3: Terminals L & N = D8 & D7 Single phase, 110/240V ac, 50/60Hz. ***Note:*** **The auxiliary supply chosen must equate to the contactor coil voltage used.** **IMPORTANT** ***The auxiliary supply terminals must be connected directly to the incoming supply via a fuse or circuit breaker. No series sequencing switches or contacts are permitted without consultation from SSD Drives.*** Use suitable external fuse protection: the steady state current absorbed by the controller is nominal, the external fuse is determined chiefly by considering the contactor holding VA and the controller cooling fans. (Frame H fans are powered separately). Refer to Appendix E: “Technical Specifications” - Power Supply Fuses.

Control Connections

A1 A4 B3 B4

Ramp Speed Setpoint

Connect a 10k potentiometer between terminals A1 and B3. Connect the wiper to A4.

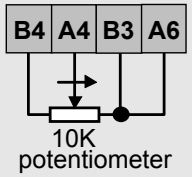

Speed Demand Controls the speed of the motor

Uni-directional Speed Setpoint

This connection provides a Uni-Directional Speed Setpoint for non-reversing applications and the 2 Quadrant controller (591+):

Maximum forward speed setpoint (+100%) = Terminal B3, +10V input
Zero speed setpoint (0%) = Terminal B1, 0V input

Thus, zero speed is at the **left** (anti-clockwise) position on the potentiometer.

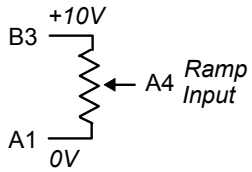

Bi-directional Speed Setpoint

Alternatively, substitute A1 for terminal B4 to scale the input such that:

Maximum forward speed setpoint (+100%) = Terminal B3, +10V input
Maximum reverse speed setpoint (-100%) = Terminal B4, -10V input

Thus, zero speed demand is at the **centre** position on the potentiometer.

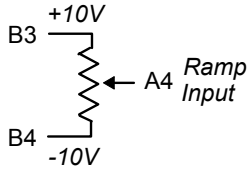

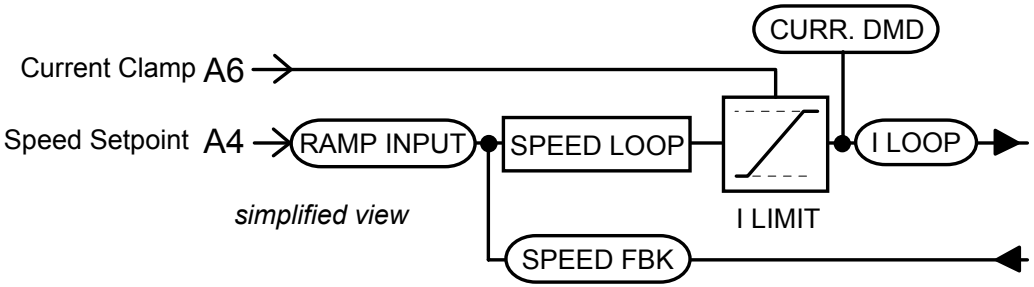

In both cases, the Current Limit is controlled via terminal A6 (ANIN5).

NOTE **Terminals A1, B1 and C1 (Signal 0V) are the common reference points for all analog signals used in the drive.**

A6 Current Limit

B3

Connect terminal A6 to B3.

Current Limit Controls the available motor torque

This connection provides control of the Positive and Negative Current Clamps and hence the Current Demand via terminal A6 (ANIN5). The "ANIN 5 (A6)" function block contains parameters to set up maximum/minimum values for the analog input, and a scaling ratio.

Adjust the main current limit using the MAIN CURR. LIMIT parameter [Tag No. 15]. Refer to Appendix D: "Programming" - CURRENT LOOP.

Fixed Current Limit

For normal operation of the main current limit, connect Terminal A6 (ANIN5) to Terminal B3 (+10V reference) and set the CURR.LIMIT/SCALER parameter to 200%. This allows the MAIN CURR.LIMIT parameter to adjust the current limit between 0 and 200% full load current.

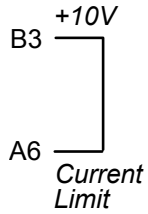

Variable Current Limit

If external control of the current demand is required, an additional 10K potentiometer connected between Terminal B3 (+10V Ref) and Terminal B1(0V), with the wiper connected to Terminal A6 (Analog I/P5) gives 0 to 200% of full load current provided that the MAIN CURR. LIMIT and CUR. LIMIT/SCALER parameters are set to 200%.

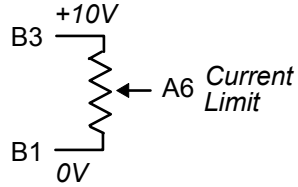

B8 Program Stop/Coast Stop

B9

C9

Connect terminals B8 & B9 to C9 via an Emergency Stop relay.

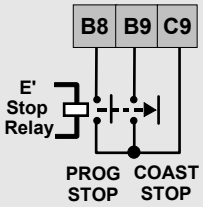

These connections provide a Program Stop (B8), and a Coast Stop (B9).
Refer to Chapter 4: "Operating the Drive" - Starting and Stopping Methods.

The "Emergency Stop" relay (normally-open, delay on de-energisation) should not be part of the normal sequencing system which is implemented via the Start contacts, but is a relay which can be operated in exceptional circumstances where human safety is of paramount importance.

- Removing 24V from B9 opens the main contactor via the relay
- Removing 24V from B8 provides regenerative braking for 4 Quadrant DC590+ drives

A regenerative drive can be stopped using a *Normal Stop*, a *Program Stop,* or an *Emergency Stop.* However, a non-regenerative drive can only be made to stop faster than friction and loading will allow by Dynamic Braking.

Control Connections continued

C5 C9	**Enable**	☐ ✔
	Connect terminal C5 to C9.	Terminal C5 (Enable) must be connected to C9 (+24V) to allow the drive to run. **Connection via a switch is useful to inhibit the drive without opening the main contactor, however, it is not a safe mode of operation as the drive dc output is only reduced to zero. If the equipment controlled by the drive is to be serviced, then this method should be avoided and the drive disabled and isolated.** **It is important that more than one stop input (ENABLE C5, START/RUN C3, COAST STOP B9, PROG STOP B8) is always used to ensure stopping of the drive under single fault conditions .**
C3 C9	**Start/Run**	☐ ✔
	Connect terminal C3 to C9 via a switch.	When the single contact between C3 and C9 is closed the drive will run provided that: • B8 & B9 are TRUE (+24V) - see "Emergency Stop" above • C5 is TRUE (+24V) - see "Enable" above When the single contact between C3 and C9 is opened the drive will decelerate the motor to zero speed at a rate determined by the STOP TIME parameter's value and the MAIN CURR. LIMIT value. Refer to Appendix D: "Programming" - STOP RATES for further details. **NOTE** **If Enable C5 is opened during a Normal Stop sequence, the drive is disabled, the contactor opens, and the drive will Coast To Stop.**
C4 C9	**Jog/Slack**	☐ ✔
	Connect terminal C4 to C9 via a switch or pushbutton.	• If the drive is stationary this switch provides a Jog facility. • If the drive is running, this switch provides a Take-Up Slack facility. For other user-definable operating modes, refer to Appendix D: "Programming" - JOG/SLACK for further details.

Control Connections continued

C1 C2	**External Trip**	☐✔
	Connect terminal C1 to C2, or link terminals if not required.	**Terminals C1 and C2 must be linked if an External Trip interlock is not required.** This input terminal provides an external trip facility to any normally-closed trip switch , e.g. for vent fan overload protection.
C1 B6	**Drive Healthy**	☐✔
	Connect terminal C1 to B6 via a lamp (for example).	This is one of three digital output terminals that provide a +24V dc output signal under certain conditions. They allow for the connection of relays which, in conjunction with the Enable, Start/Run and Emergency Stop relay, can be used to enhance the safe starting and stopping of the controller. The drive is "healthy" (TRUE) if there is no Start command. These are configurable outputs and can be used as required in the control system design, i.e. cubicle door lamps, connection to a suitable PLC.
B5 B6 B7	**Digital Outputs**	
	User connection to external equipment.	There are three digital output terminals that provide a +24V dc output signal under certain conditions. They allow for the connection of relays which, in conjunction with the Enable, Start/Run and Emergency Stop relay, can be used to enhance the safe starting and stopping of the controller. These are configurable outputs and can be used as required in the control system design, i.e. cubicle door lamps, connection to a suitable PLC. The default actions are: • B5 = Zero Speed Detected • B6 = Drive Healthy • B7 = Drive Ready Refer to Appendix E: "Technical Specifications" - Terminal Information - Control Board, also Chapter 6: "The Keypad" - DIAGNOSTICS.

Control Connections continued

A2	**Direct Speed Setpoints**	
A3 C8	**Connect your external setpoint(s) to terminal A2 and/or A3.**	**Speed Setpoint No. 1 (A2)** This input is configurable.Terminal A2 (Analog Input 1) is a direct speed demand by-passing the "Setpoint Ramp Generator", and should be used if direct control is required. **Speed Setpoint No. 2 / Current Demand (A3)** This input is **not** configurable. Terminal A3 (Analog Input 2) is a dual function terminal (either "Speed Setpoint No. 2" or "Current Demand") as selected by mode switch control "Current Demand Isolate", Terminal C8. As a speed setpoint, it can be used in the same way as Terminal A2. If more than one speed setpoint is used, they are additive. Also refer back to A4, Ramp Speed Setpoint, page 22.
A5	**Auxiliary Current Clamp (-ve)**	
B4 C6 C9	**Connect terminal A5 to B4 to provide -10V, or supply externally.** **Connect terminal C6 to C9 to enable bipolar current clamps.**	Used to allow separate control of positive and negative Main Current Clamps, for example, in Winder applications. Enable bipolar current clamps by providing 24V at terminal C6. Terminal A5 (ANIN4) is an Auxiliary Current Clamp (-ve), 0 to -10V. **NOTE** **If driven positive, it will form a current demand.** The "ANIN 4 (A5)" function block contains parameters to set up maximum/minimum values for the analog input, and a scaling ratio. With 24V at terminal C6, Terminal A6 (ANIN 5) acts only as the Auxiliary Current Clamp (+ve), 0 to +10V.

	Control Connections continued	
A7 A8	**Analog Outputs**	
	User connection to external equipment.	These are configurable outputs and can be used as required in the control system design, i.e. connection to a meter, for cascading to another drive. • Terminal A7, Analog Output 1 provides a Speed Feedback value, -10V to +10V • Terminal A8, Analog Output 2 provides a Total Speed Setpoint value, -10V to +10V The "ANOUT1" and "ANOUT2" function blocks contain parameters to configure the values.
A9	**Current Meter Output**	
	User connection to external equipment.	This connection is for a Current Meter. The "ARMATURE I (A9)" parameter is used to select either unipolar or bipolar output. Refer to Appendix D: "Programming" - CALIBRATION. This ouput is **not** configurable. It is driven directly by hardware.
C6 C7 C8	**Digital Inputs**	
	User connections to the drive.	These configurable 24V dc digital inputs are used to control the drive. The default configurations are: • C6 : Current Clamp Select (see A5 and A6) • C7 : Ramp Hold • C8 : Current Demand Isolate (see A3) Refer to Appendix E: "Technical Specifications" - Terminal Information - Control Board, also Appendix D: "Programming" - DIGITAL INPUTS.

Control Connections continued

G1 G2 G3 G4 Analog Tachometer

User connection to external equipment.

Fit the Tacho Calibration Option Board to the Drive.

This provides terminals G1 to G4.

Refer to Optional Equipment, page 3-53, for further information.

An Analog Tachometer is connected to the Drive using a screened twisted pair cable throughout its entire length to provide speed feedback via the Tacho Calibration Option Board. This provides facility for an AC or DC tachometer. The screen is grounded or earthed only at the drive end, any other grounding arrangement may cause problems.

- Terminals G1 & G2 are for AC tacho connections.
- Terminals G3 & G4 are for DC tacho connections.

NOTE **The speed loop is set-up for an analog tacho by the SPEED FBK SELECT parameter in the SPEED LOOP function block. Select ANALOG TACH for this parameter.**

If an AC tachogenerator is used the output is rectified to produce the dc feedback to the speed loop. Consequently, the controller can only be used with a positive setpoint.

Refer to Chapter 4: “Operating the Drive” for set-up information.

F1 C1 C9 Microtach

User connection to external equipment.

Fit the Microtach Option Board to the Drive.

This provides the fibre optic terminal F1.

Refer to Optional Equipment, page 3-53, for further information.

The Parker SSD Drives MICROTACH is available in two versions:

- 5701 Plastic Fibre Microtach
- 5901 Glass Fibre Microtach

A Microtach can be connected to provide speed feedback via the Microtach Option Board using the international standard “ST” fibre optic system.

F1 is the fibre optic receiver input socket. Terminals C9 (+24V dc) and C1 (0V) are used to provide the supply and return respectively.

NOTE **The speed loop is set-up for the Microtach by the SPEED FBK SELECT parameter in the SPEED LOOP function block. Select ENCODER for this parameter.**

The maximum Microtach frequency is 50kHz, thus with a standard 1000 lines per revolution Microtach the motor speed cannot exceed 3000 rpm.

For specification and connection information refer to Parker SSD Drives or the appropriate Technical Manual.

Control Connections continued

E1	**Wire-Ended Encoder**	
E2 E3 E4 E5 E6	**User connection to external equipment.** **Fit the Encoder Option Board to the Drive.** **This provides terminals E1 to E6.**	Refer to Optional Equipment, page 3-53, for further information. The wire-ended encoder is connected to the Drive using a screened cable throughout its entire length to provide speed feedback. Terminals E1 (0V) and E2 (+24V dc) are the return and supply respectively. **NOTE** **The speed loop is set-up for the Encoder by the SPEED FBK SELECT parameter in the SPEED LOOP function block. Select ENCODER for this parameter.** The maximum allowable encoder frequency is 100kHz, thus with a standard 1000 lines per revolution encoder the motor speed cannot exceed 6000 rpm. For specification and connection information refer to Parker SSD Drives or the appropriate Technical Manual.
H1	**Technology Box Option**	
H2 H3 H4 H5 H6	**User connection to external equipment.** **Fit the Technology Box Option to the Drive.** **This provides terminals H1 to H6.**	The Technology Box Option allows drives to be linked together to form a network. We can supply Options for most protocols. Refer to Appendix D: "Programming" - TEC OPTION for information about Technology Box Option types. For detailed information, refer to the appropriate Technical Manual supplied with the Technology Box.

Motor Field Options

WARNING
Isolate the drive before converting to internal/external supply.

The FIELD CONTROL function block controls the motor field. The FLD CTRL MODE parameter allows you to select either Voltage or Current Control mode.

- In Voltage Control mode, the FLD. VOLTS RATIO parameter is used to scale the motor field output voltage as a percentage of the input supply voltage.
- In Current Control mode, the SETPOINT parameter is used to set an absolute motor field output current, expressed as a percentage of the calibrated field current (IF CAL).

Internal/External Supply (Frames 2, 3, 4 & 5)

NOTE **The Frame 1 unit allows only an internal motor field supply. The Frame 6 and Frame H units always require an external motor field supply. For information about the following terminal/power boards refer to Appendix E: "Technical Specifications" - Terminal Information (Power Board).**

The internal motor field is more widely used, however, there is provision on the unit for an external motor field supply to be connected (perhaps for where the field voltage is greater than the input voltage and therefore not attainable, or where the motor field is switched separately for convenience).

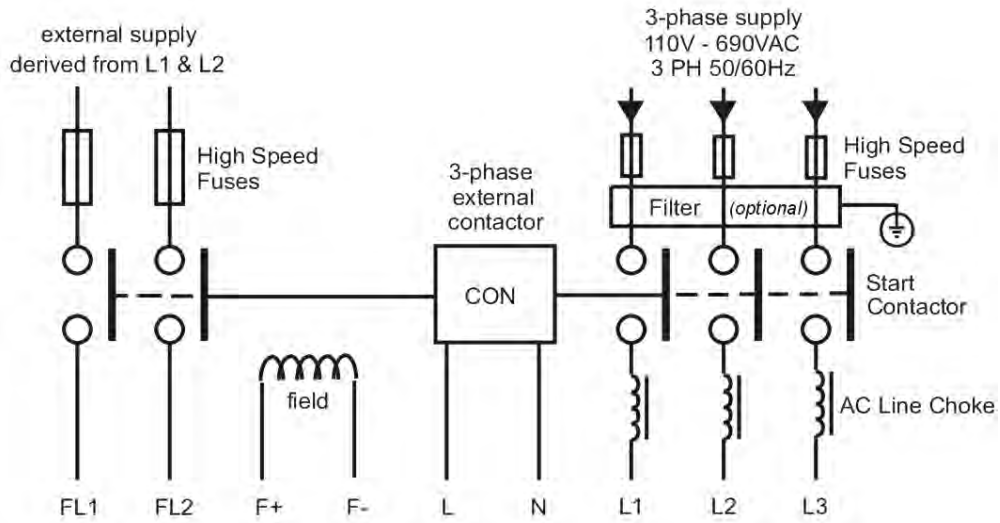

Figure 3- 12 Typical connection diagram

Terminal Board - PCB Reference 470330 (Frame 2)

The position of the jumper selects the board to use either an internal or external motor field.

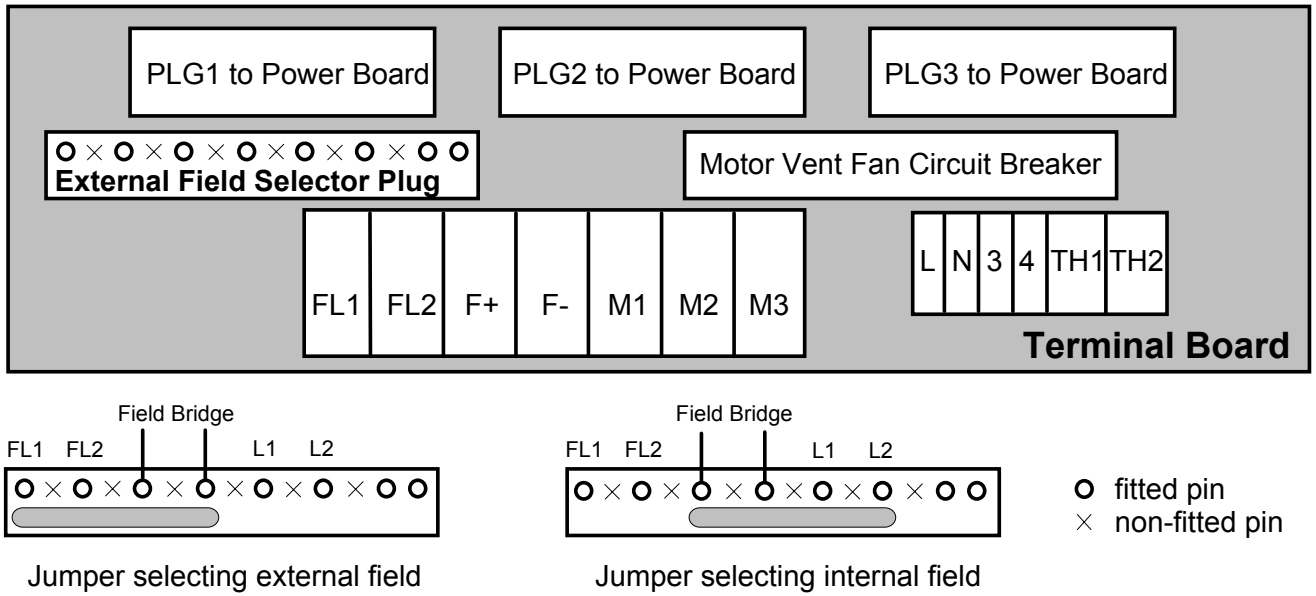

Internal Motor Field (default for this board)

Terminals F+ and F-, the motor field outputs, are energised when the 3-phase supply is connected to L1/L2/L3. Terminals FL1 and FL2 are not required. The internal motor field supply is fused by 10A fuses, FS5 & FS6.

External Motor Field Connections

Terminals FL1 and FL2 can be used for external ac supply connection for the Motor Field Supply. You should provide suitably rated external, fast-acting semi-conductor fusing, to a maximum of 10A.

Caution

When using an external ac input it is important to have the correct phase relationship on the terminals. The supply must be derived from L1 (Red) and L2 (Yellow) phases directly or indirectly through a single-phase transformer.
L1 must be connected to FL1, and L2 connected to FL2.

The external field supply can now be connected and power restored to the drive.

Power Board - PCB Reference 385851 (Frame 3)

This power board (printed with the above number) can be altered for use with either an internal or external motor field supply:

Internal Motor Field (default for this board)

Terminals D3 and D4, the motor field outputs, are energised when the 3-phase supply to L1/L2/L3 is energised and the internal motor field is used. Terminals D1 and D2 are not energised. The internal motor field supply is fused by the 10A fuses, FS2 & FS3.

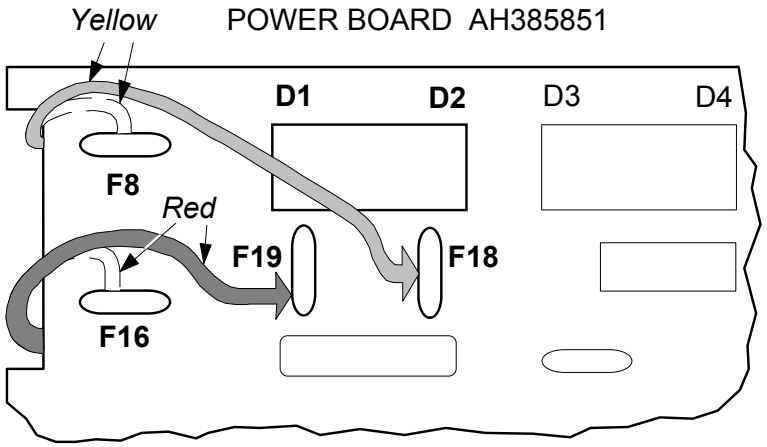

External Motor Field Connections

Terminals D1 and D2 on the Power Board can be used for an external ac supply connection for the Motor Field Supply.

A simple re-wiring procedure disconnects the internal motor field supply and prepares terminals D1 and D2 for the external ac supply connection.

You should provide suitably rated external, fast-acting semi-conductor fusing, to a maximum of 10A.

Re-Wiring Procedure

WARNING

Isolate all power to the drive.

1. Loosen the control board fixing screws (2 off) and position the control board to allow access to the power board.
2. Remove the **red** link from the Faston connector “F16” on the left-hand side of the board and connect it to staging post “F19”, located below terminal D1.
3. Remove the **yellow** link wire from the Faston connector **“**F8” on the left-hand side of the board and connect it to staging post **“**F18”, located below terminal D2.

Caution

When using an external ac input it is important to have the correct phase relationship on the terminals. The supply must be derived from L1 (Red) and L2 (Yellow) phases directly or indirectly through a single phase transformer.
L1 must be connected to D1, and L2 connected to D2.

The external field supply can now be connected and power restored to the drive.

Power Board – PCB Reference 466701 (Frames 4 & 5)

This power board (printed with the above number) can be altered for use with either an internal or external motor field supply:

Internal Motor Field (default for this board)

Terminals F+ and F-, the motor field outputs, are energised when the 3-phase supply to L1/L2/L3 is energised and the internal motor field is used. Terminals FL1 and FL2 are not energised. The internal motor field supply is fused by the 30A fuses FS1 and FS2.

External Motor Field Connections

Terminals FL1 and FL2 on the Power Board can be used for an external ac supply connection for the Motor Field Supply.

A simple re-wiring procedure disconnects the internal field supply and prepares terminals FL1 and FL2 for the external ac supply connection.

You should provide suitably rated external, fast-acting semi-conductor fusing, to a maximum of 30A.

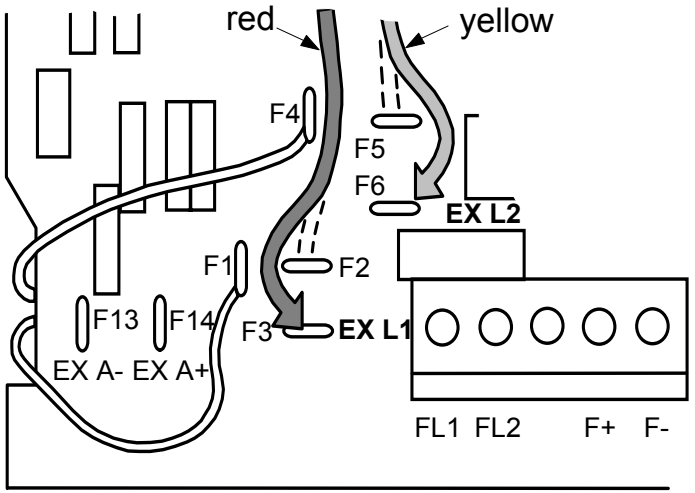

Re-Wiring Procedure

WARNING

Isolate all power to the drive.

1. Loosen the control board fixing screws (2 off) and position the control board to allow access to the power board.
2. Remove the **red** link from the Faston connector "F2" and connect it to the staging post "F3" nearby (EX L1).
3. Remove the **yellow** link wire from the Faston connector "F5" and connect it to the staging post "F6" nearby (EX L2).

Caution

When using an external ac input it is important to have the correct phase relationship on the terminals. The supply must be derived from L1 (Red) and L2 (Yellow) phases directly or indirectly through a single phase transformer.
L1 must be in phase with FL1, and L2 must be in phase with FL2.

The external field supply can now be connected and power restored to the drive.

DC Contactor - External Va Sensing

Connections are provided for external armature voltage sensing (at the motor) for when a dc contactor is used between the drive and motor.

Power Board - PCB Reference 385851 (Frame 3)

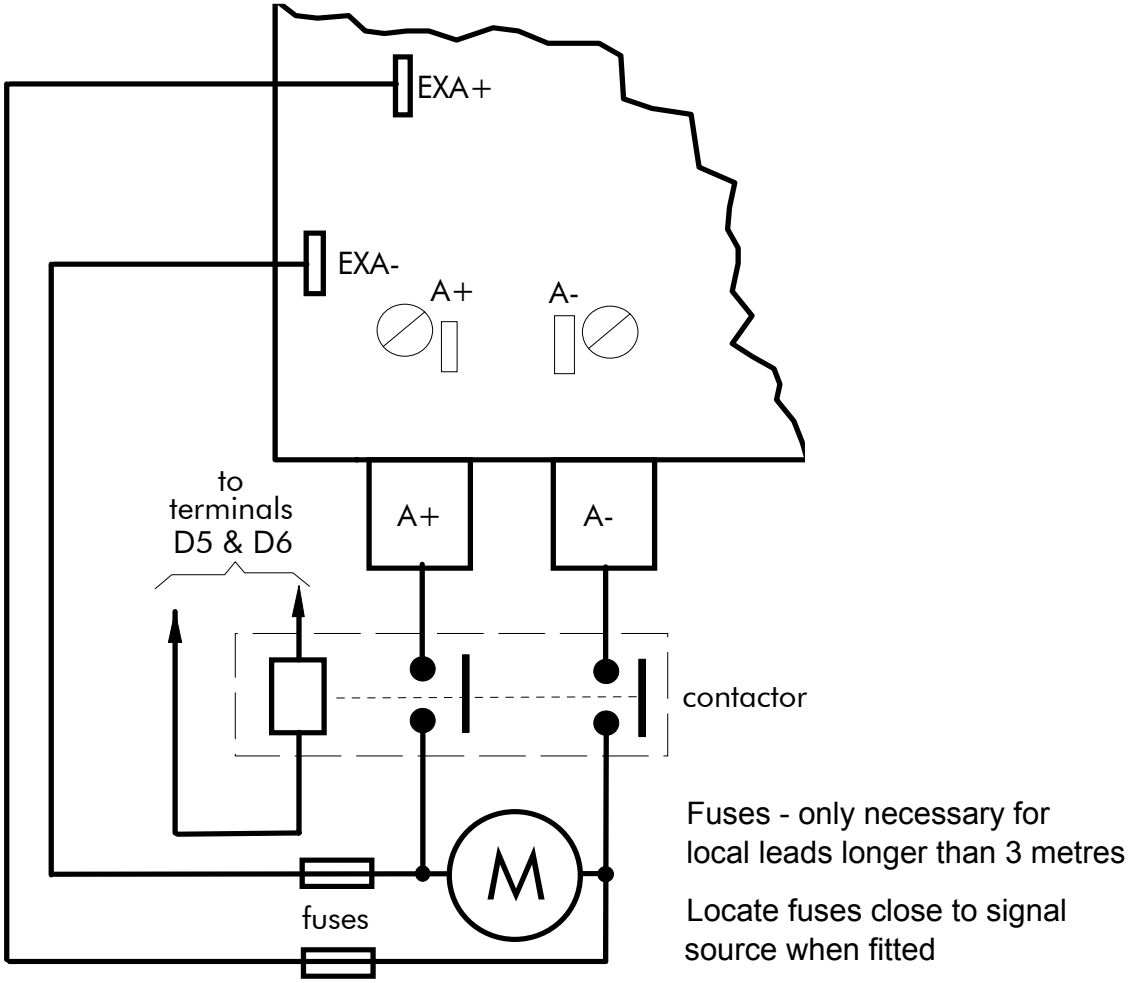

Power Board – PCB Reference 466701 (Frames 4 & 5)

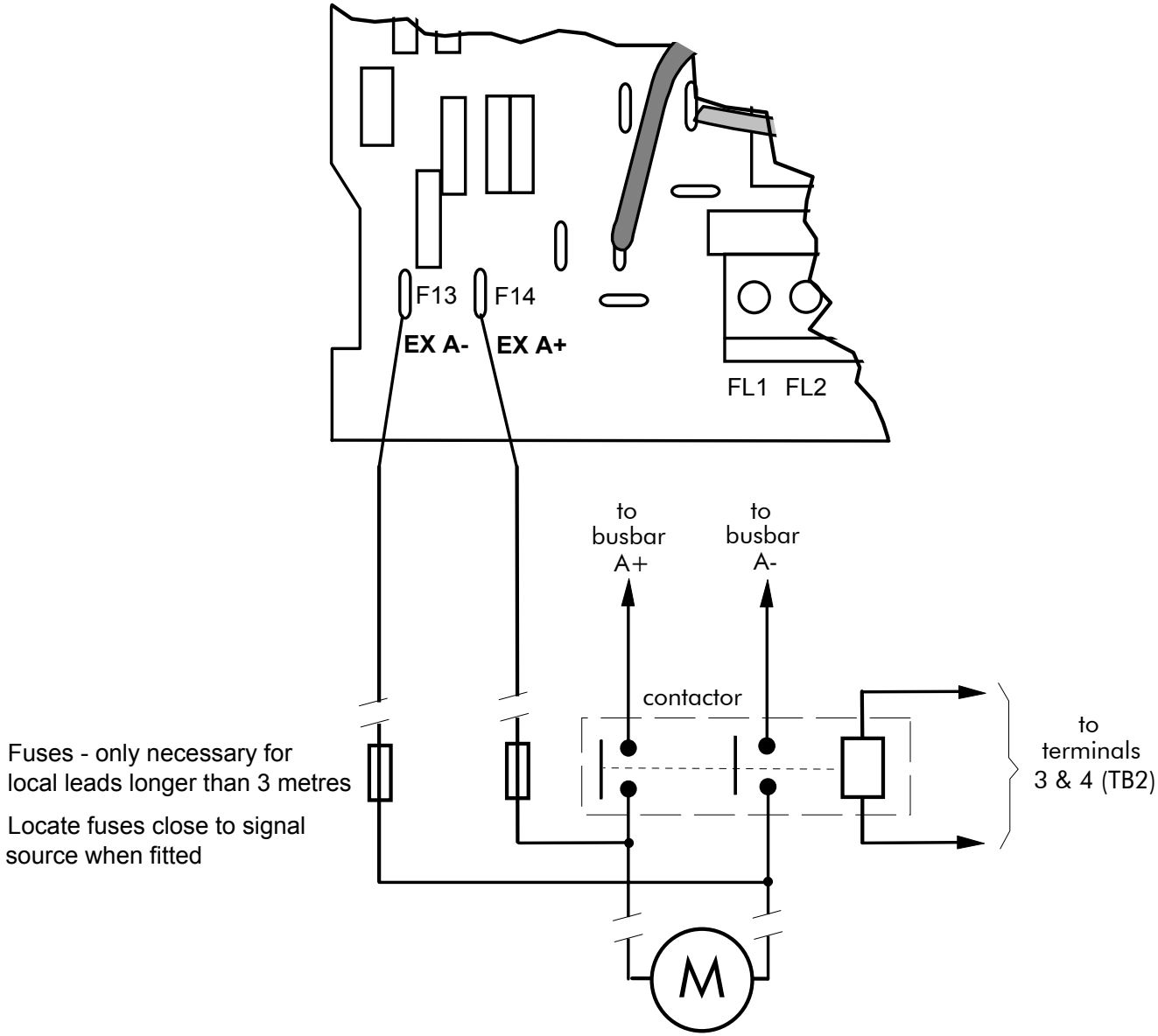

External Connections (Frames 6 & H)

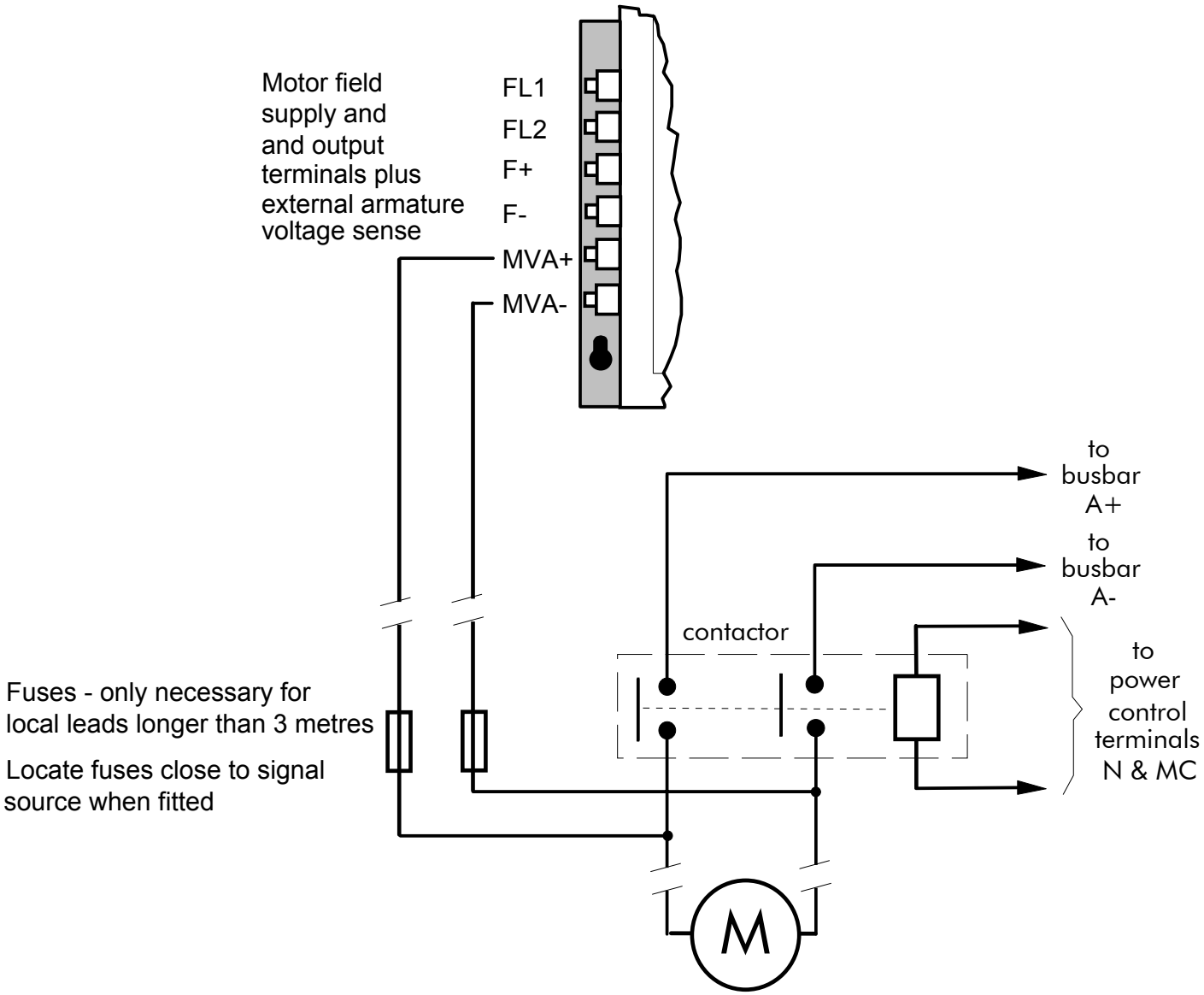

Power Board Circuit Descriptions

AH470280U001, U002, U003, U004 (Frame 1)

(2 Quad and 4 Quad)

Power supplies for the controller are generated from the single phase auxiliary supply via a Switched Mode Power Supply. The incoming supply is directly rectified to provide a high voltage dc power rail. A high voltage transistor switches this rail on to the primary of a high frequency transformer, the output of which is rectified and smoothed to provide the dc power supply rails. The +15V dc rail is monitored via a reference element and a control signal returned via an opto-isolator to the control element of the high voltage switching transistor. The other dc rails (-15V & +24V dc) are generated via separate secondary windings which are rectified and smoothed, with a separate SMPS element providing a regulated +5V dc rail. The SMPS operates over a0n input voltage range of 110V to 240V ac ±10%, 50/60Hz.

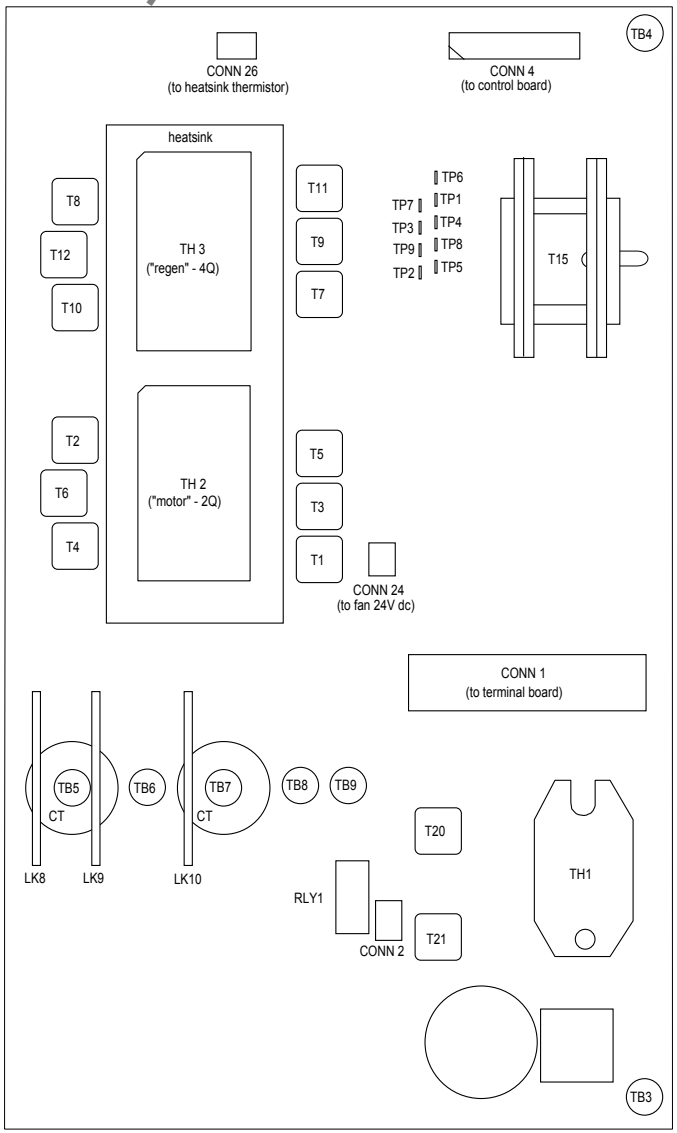

Figure 3- 13 590+ Power Board 4 Quad

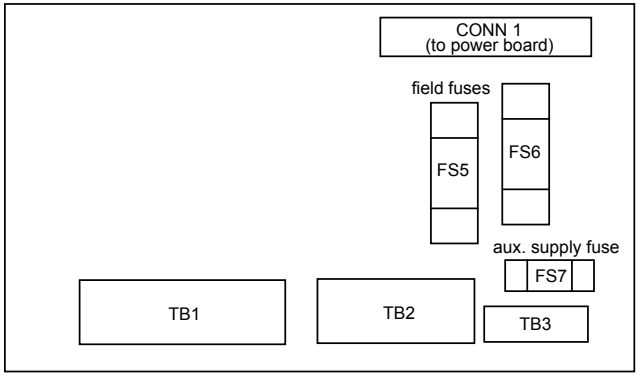

Figure 3- 14 Terminal Board - AH466407

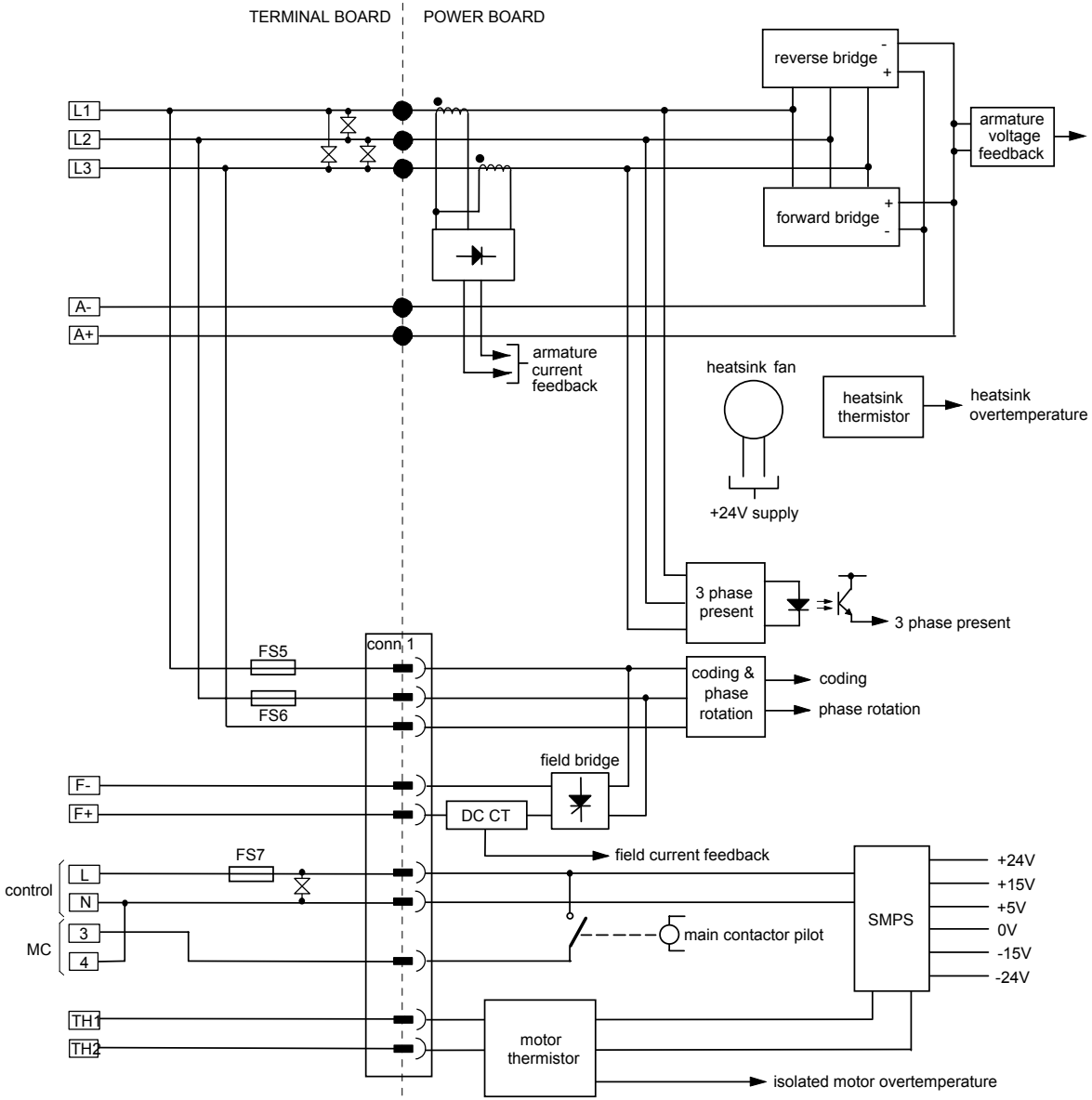

Figure 3- 15 Connection Diagram for Power Board and Terminal Board - AH470280 (Frame 1)

AH470330 (Frame 2)

(2 Quad and 4 Quad)

Power supplies for the controller are generated from the single phase auxiliary supply via a Switched Mode Power Supply. The incoming supply is directly rectified to provide a high voltage dc power rail. A high voltage transistor switches this rail on to the primary of a high frequency transformer, the output of which is rectified and smoothed to provide the dc power supply rails. The +15V dc rail is monitored via a reference element and a control signal returned via an opto-isolator to the control element of the high voltage switching transistor. The other dc rails (-15V & +24V dc) are generated via separate secondary windings which are rectified and smoothed, with a separate SMPS element providing a regulated +5V dc rail. The SMPS operates over an input voltage range of 110V to 240V ac ±10%, 50/60Hz.

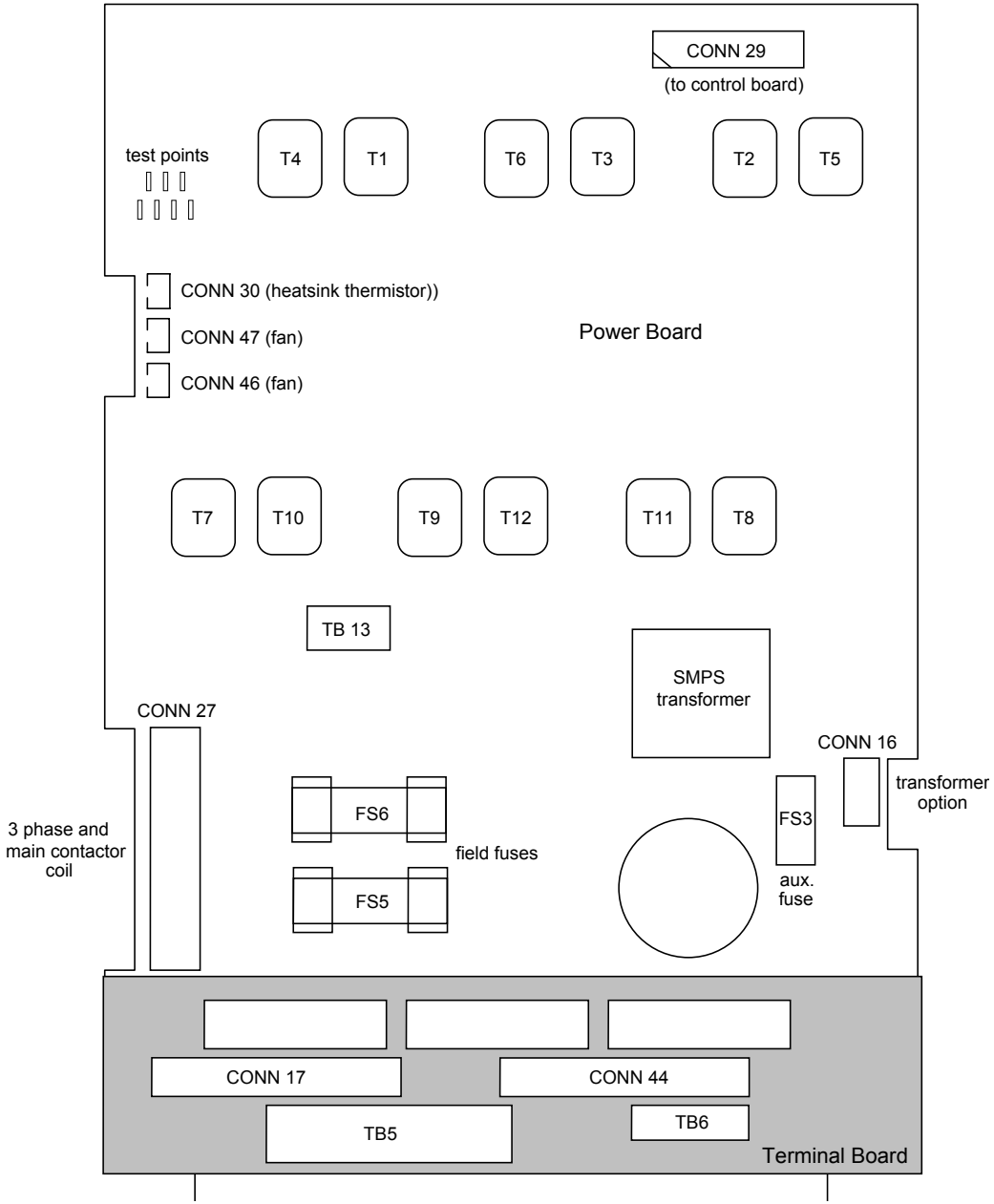

Figure 3- 16 590+ Power Board 4 Quad (AH470330)

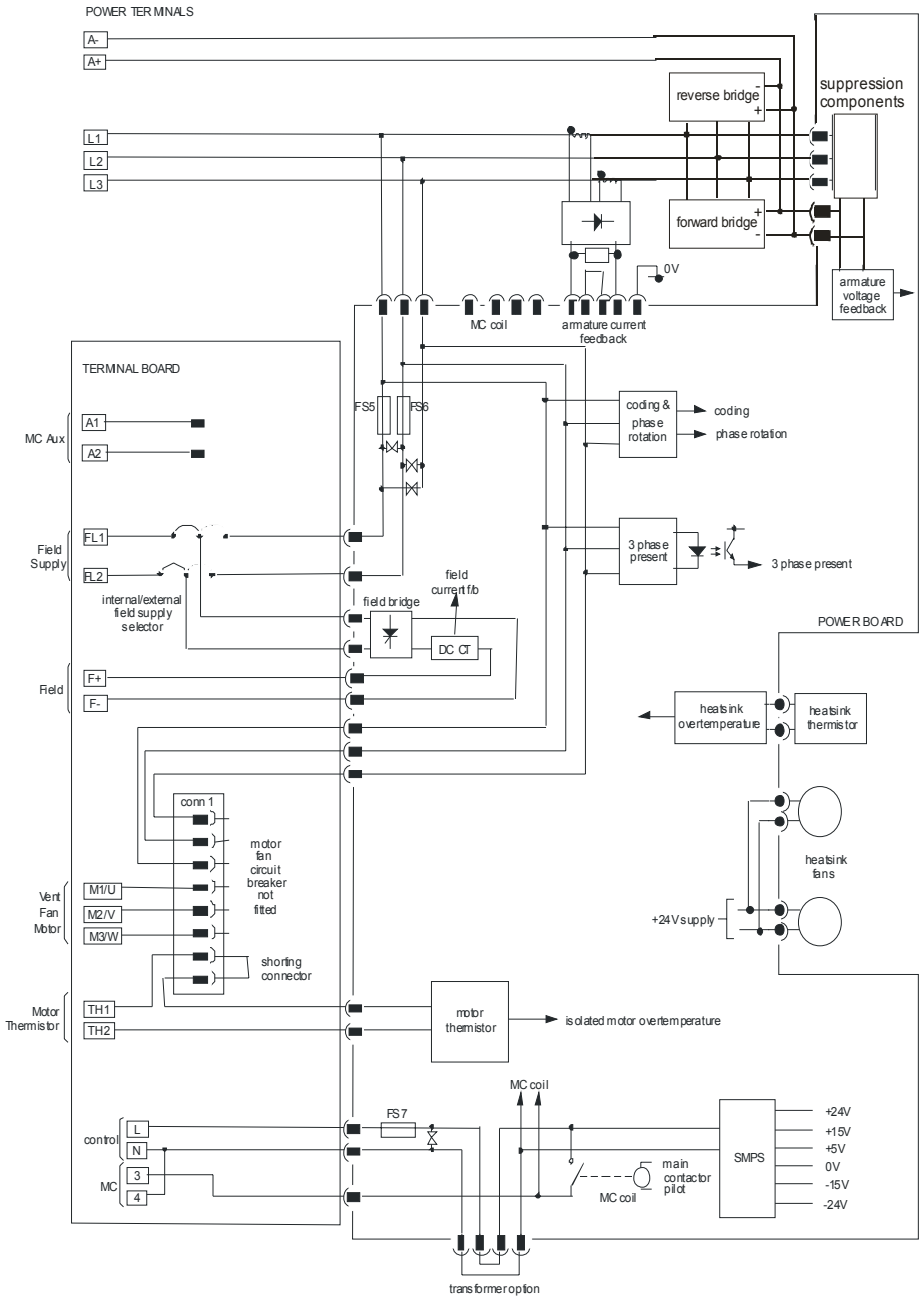

Figure 3- 17 AH470330 (Frame 2)

AH385851U002, U003, U004, U005 (Frame 3)

(590+ - 4 Quad, 591+ - 2 Quad; Low and High Volt)
Power supplies for the controller are generated from the single phase auxiliary supply via a switched mode power supply. The incoming supply is directly rectified to provide a high voltage dc power rail. A high voltage transistor switches this rail on to the primary of a high frequency transformer, the output of which is rectified and smoothed to provide the dc power supply rails. The +5V dc rail is monitored via a reference element and a control signal returned via an opto-isolator to the control element of the high voltage switching transistor. The ±15V dc rails are generated via separate secondary windings which are rectified, smoothed and stabilised by linear regulators. The SMPS operates over an input voltage range of 110V to 240V ac ±10%, 50/60Hz. The auxiliary supply fuse FS1 provides protection of the high voltage elements.

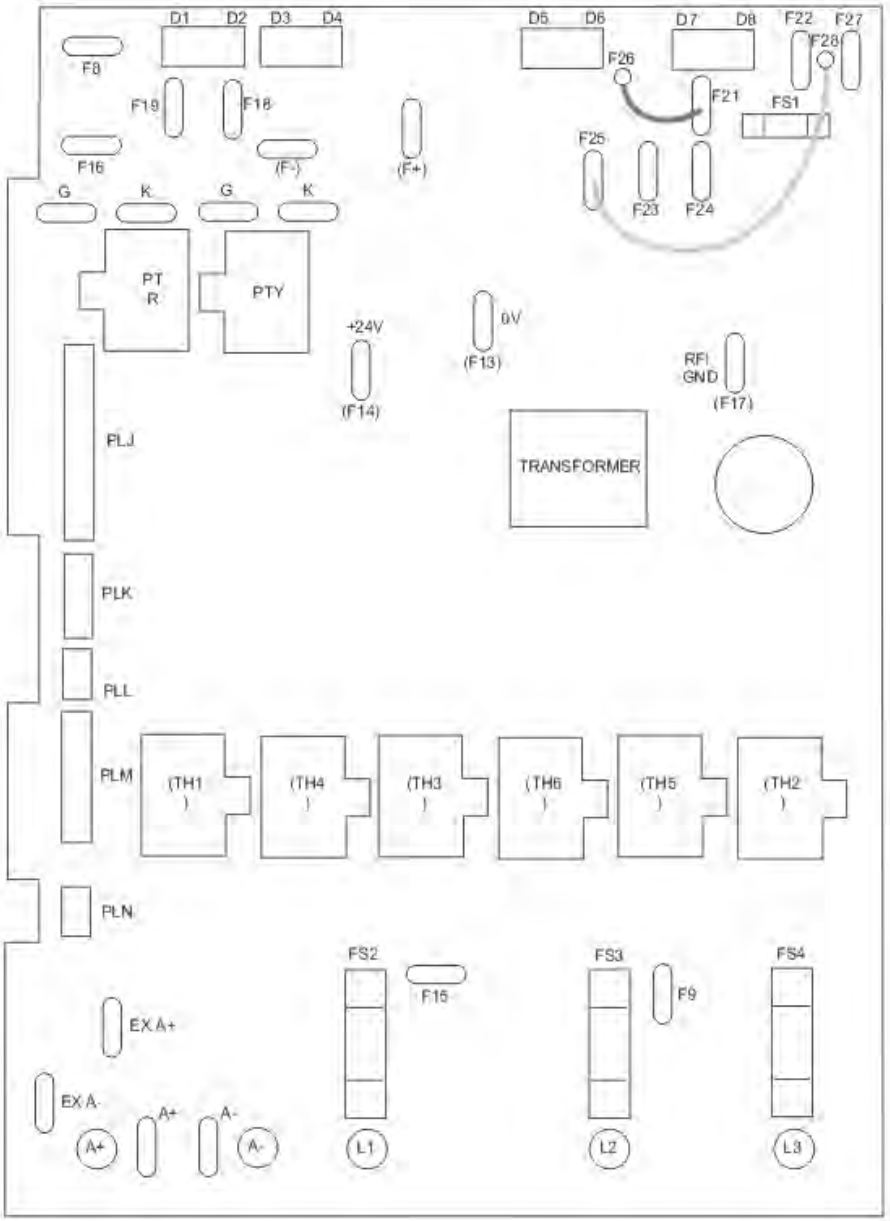

Figure 3- 18 591 Power Board 2 Quad (AH385851U003, U004)

Heatsink Cooling Fan Connections

When fitted, these fans are connected on the power board to FAN LIVE (F27), FAN NEUTRAL (F24) and FAN COMMON (F23) as described below:

- A single fan must be matched to the auxiliary supply and connected to F27 and F24.
- Two fans using a 110/115V auxiliary supply must be connected in parallel to F27 and F24.
- Two fans using a 220/240V auxiliary supply must be connected in series to F27 and F24 using F23 as the centre point.

Contactor Supply

The controller requires an ac or dc power contactor in series with the main power path to ensure correct power-up sequencing. This contactor is directly initiated by the Microcontroller via an isolating relay which drives the contactor coil with the same voltage as that of the auxiliary supply.

This is achieved by the brown wire connection from COIL LIVE (F28) to RELAY (F25) and the blue wire connection from COIL NEUTRAL (F21) to CONTACTOR RETURN (F26).

However, if an alternative supply for the contactor coil is required move the brown wire from F25 to F22 , and move the blue wire from F21 to F25. The external coil supply can now be switched using a volt-free contact between terminals D5 and D6.

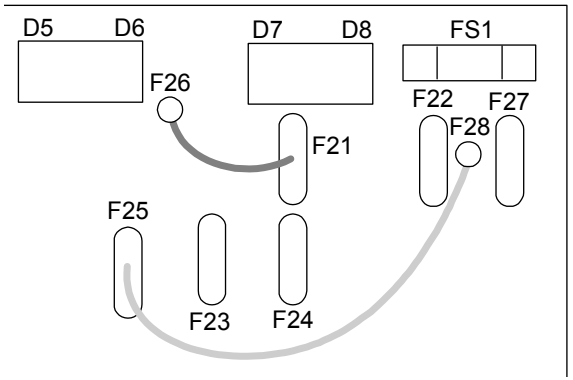

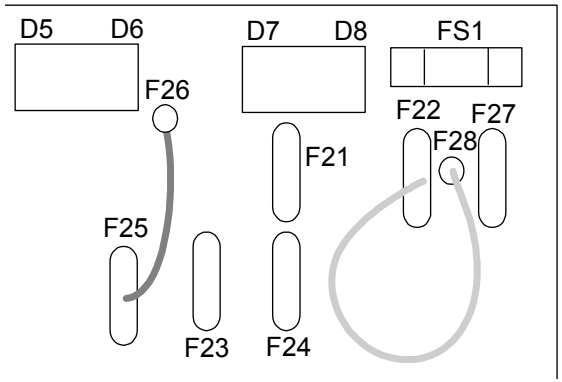

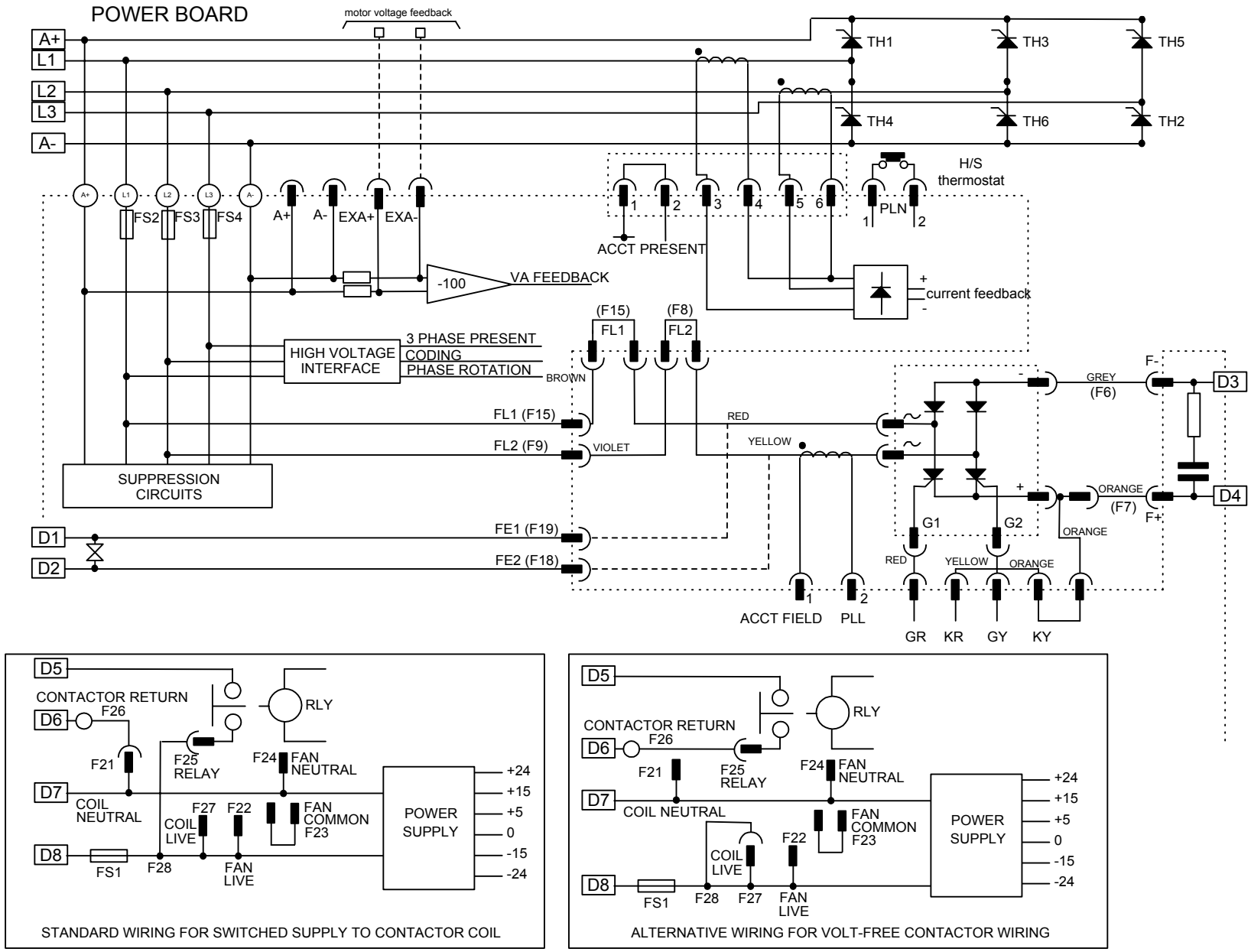

Figure 3- 19 2 Quad Power Circuit - using AH385851U003, U004 (Frame 3)

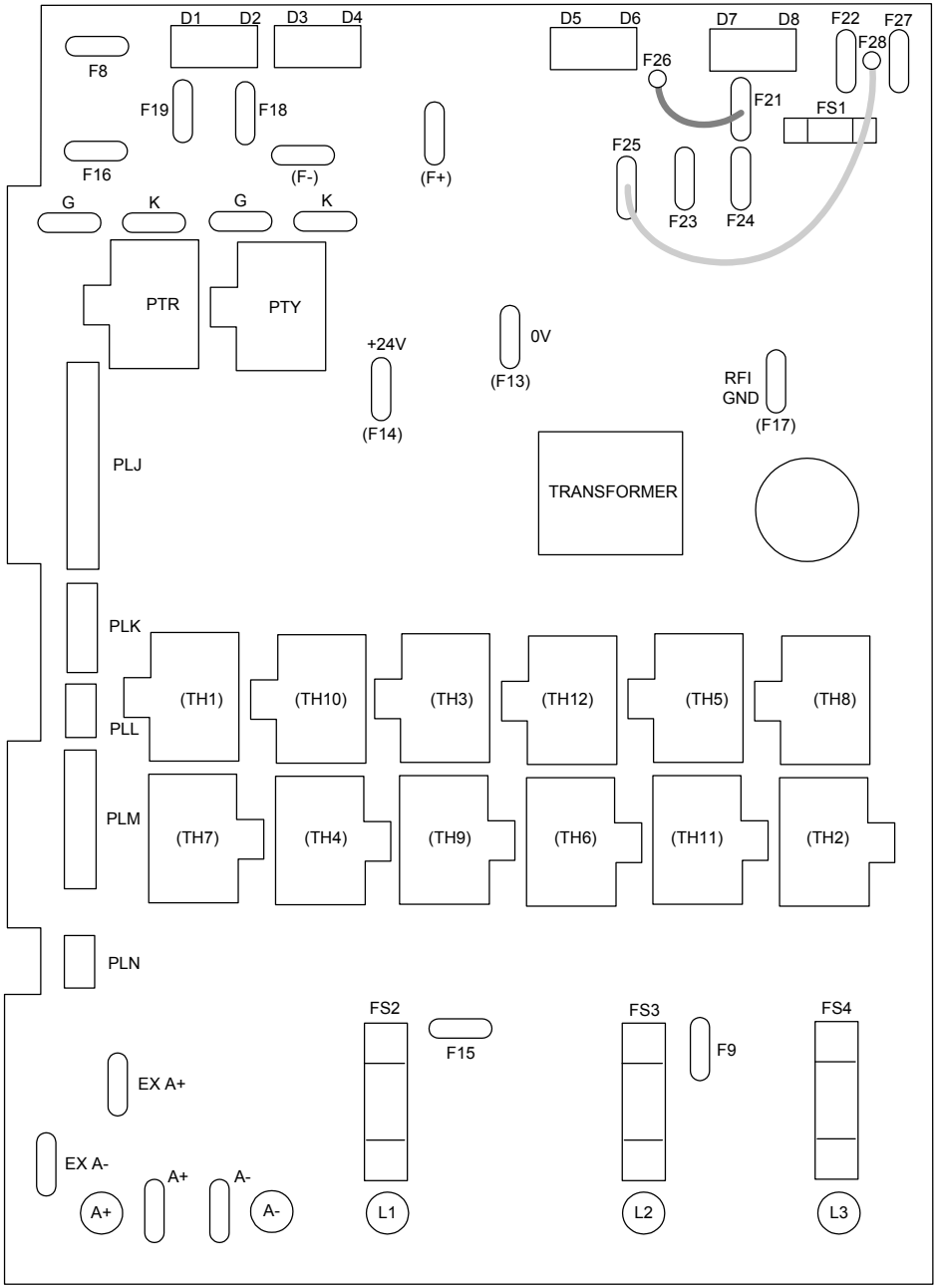

Figure 3- 20 590 Power Board
4 Quad
(AH385851U002, U005) - (Frame 3)

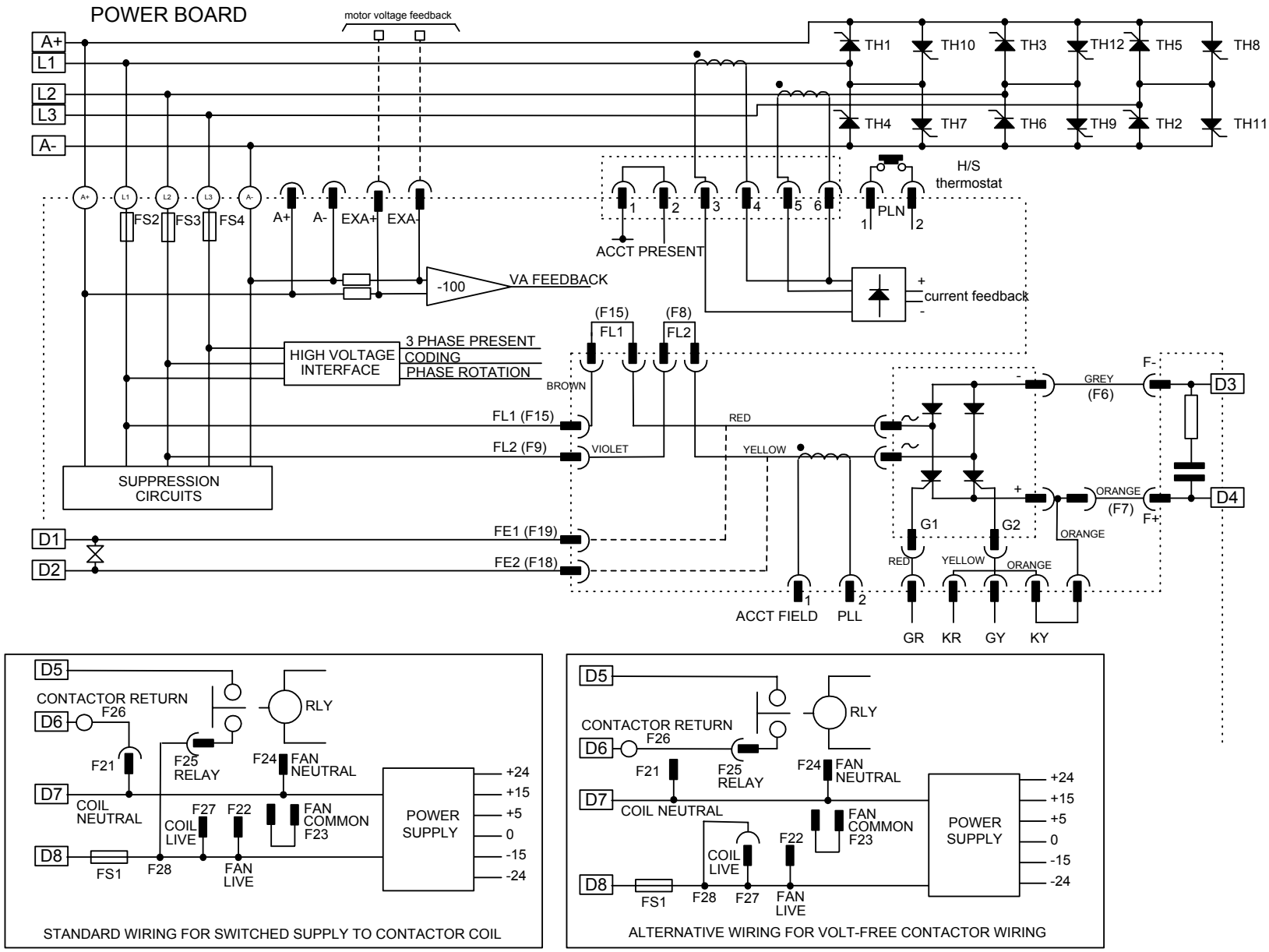

Figure 3- 21 4 Quad Power Circuit - using AH385851U002, U005 (Frame 3)

AH466701U001, U002, U003 (Frames 4 & 5)

590+ 4 Quad and 591+ 2 Quad;
Low, Medium and High Volt

Power supplies for the controller are generated from the single phase auxiliary supply via a Switched Mode Power Supply. The incoming supply is directly rectified to provide a high voltage dc power rail. A high voltage transistor switches this rail on to the primary of a high frequency transformer, the output of which is rectified and smoothed to provide the dc power supply rails. The +15V dc rail is monitored via a reference element and a control signal returned via an opto-isolator to the control element of the high voltage switching transistor. The other dc rails (-15V & +24V dc) are generated via separate secondary windings which are rectified and smoothed, with a separate SMPS element providing a regulated +5V dc rail. The SMPS operates over an input voltage range of 110V to 240V ac ±10%, 50/60Hz.

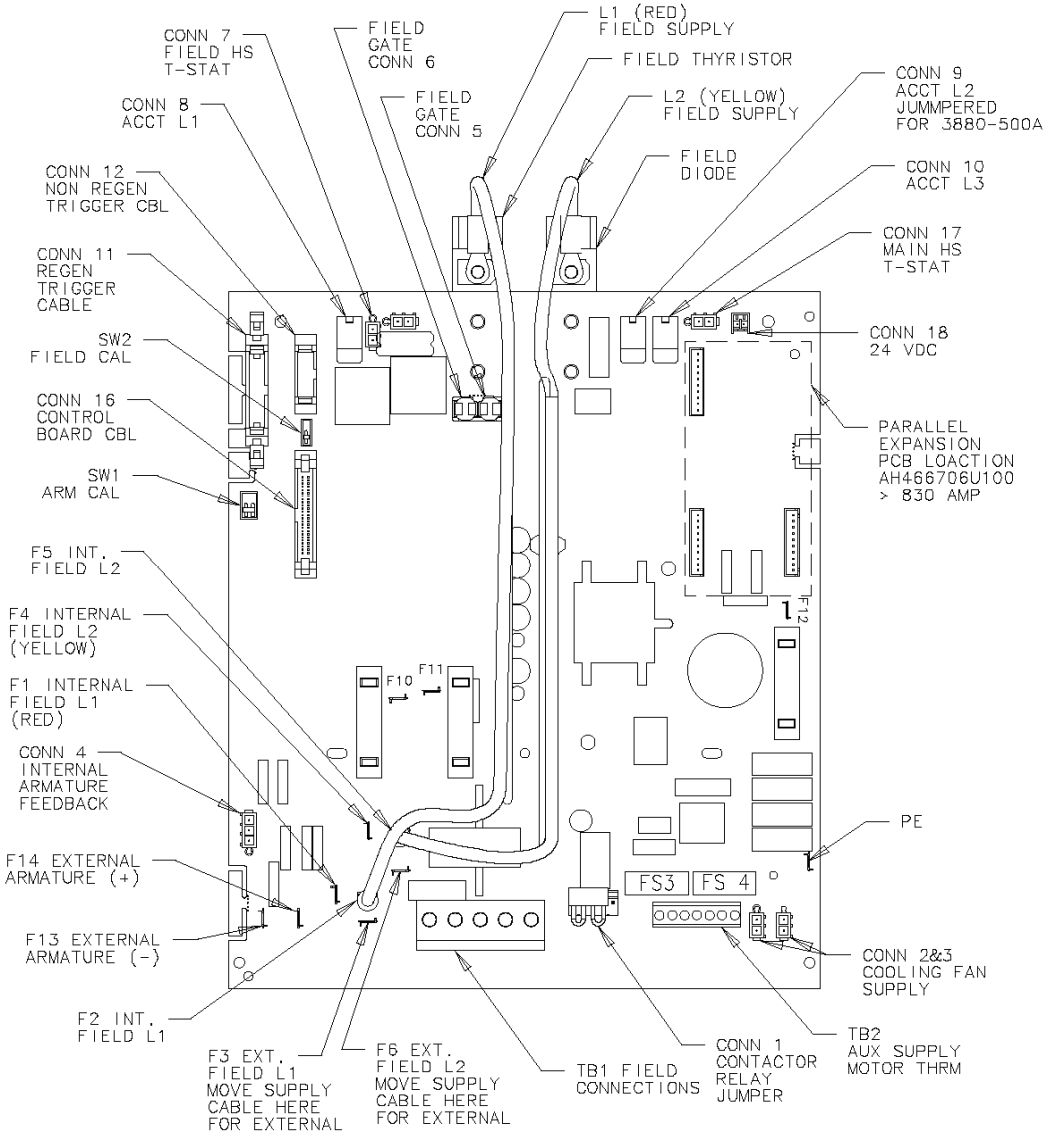

Figure 3- 22
590+/591+ Power Board

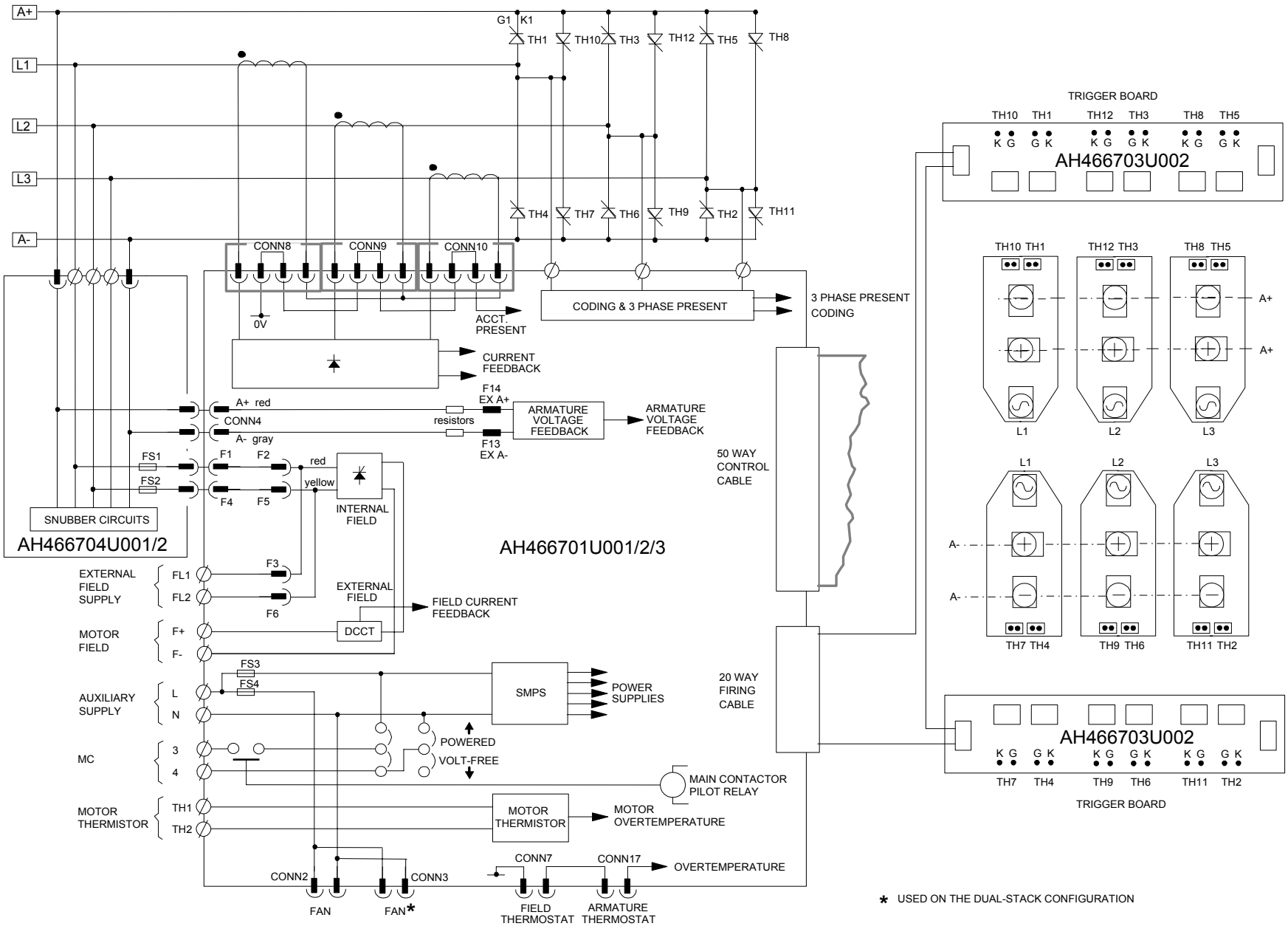

Figure 3- 23 4 Quad Power Circuit – Frame 4 & 5 Units using AH466701

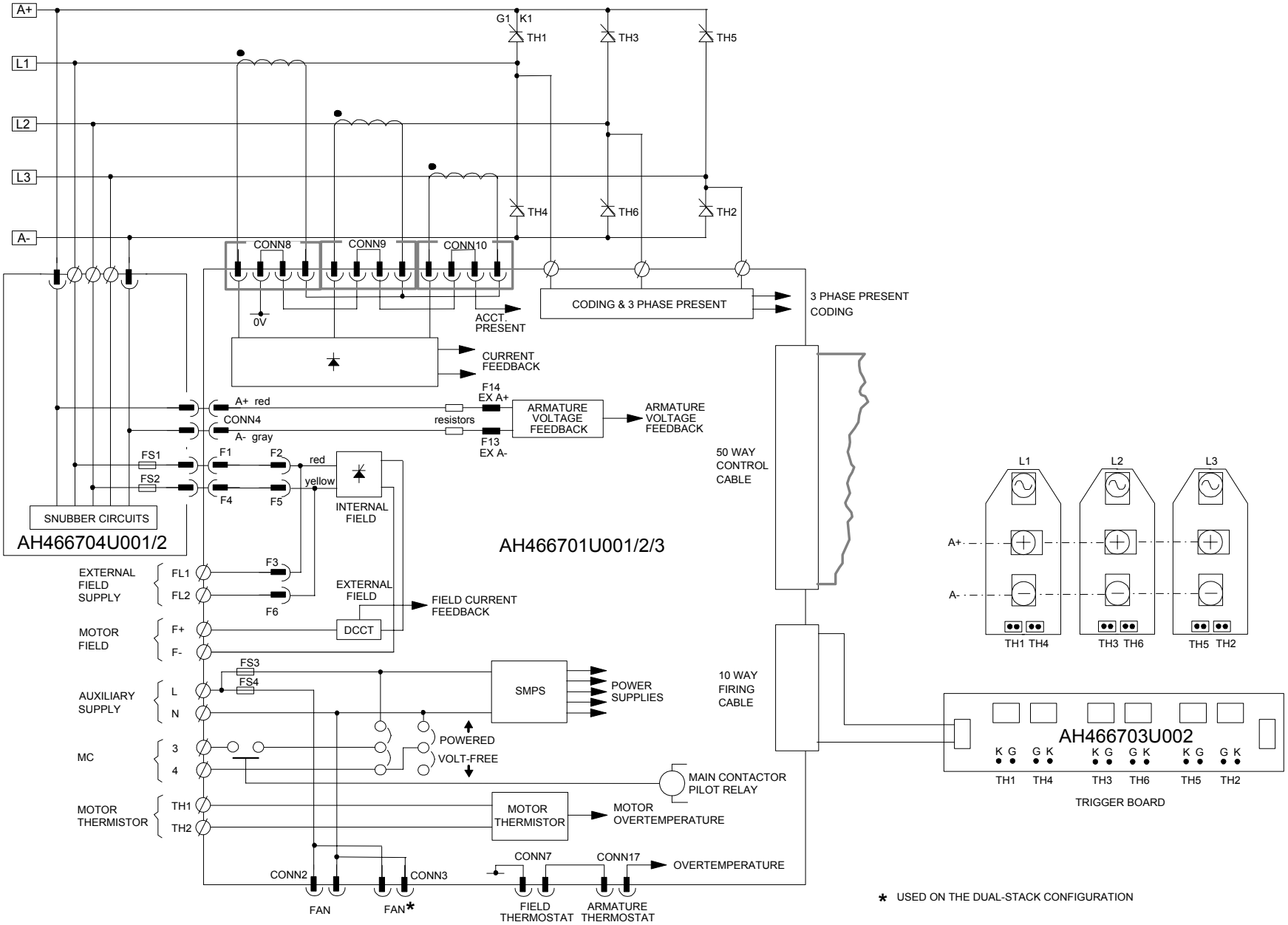

Figure 3- 24 2 Quad Power Circuit – Frame 4 & 5 Units using AH466701

AH469419 (Frame 6)

Power supplies for the controller are generated from the single phase auxiliary supply via a Switched Mode Power Supply. The incoming supply is directly rectified to provide a high voltage dc power rail. A high voltage transistor switches this rail onto the primary of a high frequency transformer, the output of which is rectified and smoothed to provide the dc power supply rails. The 5V dc rail is monitored via a reference element and a control signal returned via an opto-isolator to the control element of the high voltage switching transistor. The other dc rails (-15V & +24V dc) are generated via separate secondary windings which are rectified and smoothed, with individual linear regulators providing ±15V dc rail. The SMPS operates over an input voltage range of 115V to 230V ac ±10%, 50/60Hz.

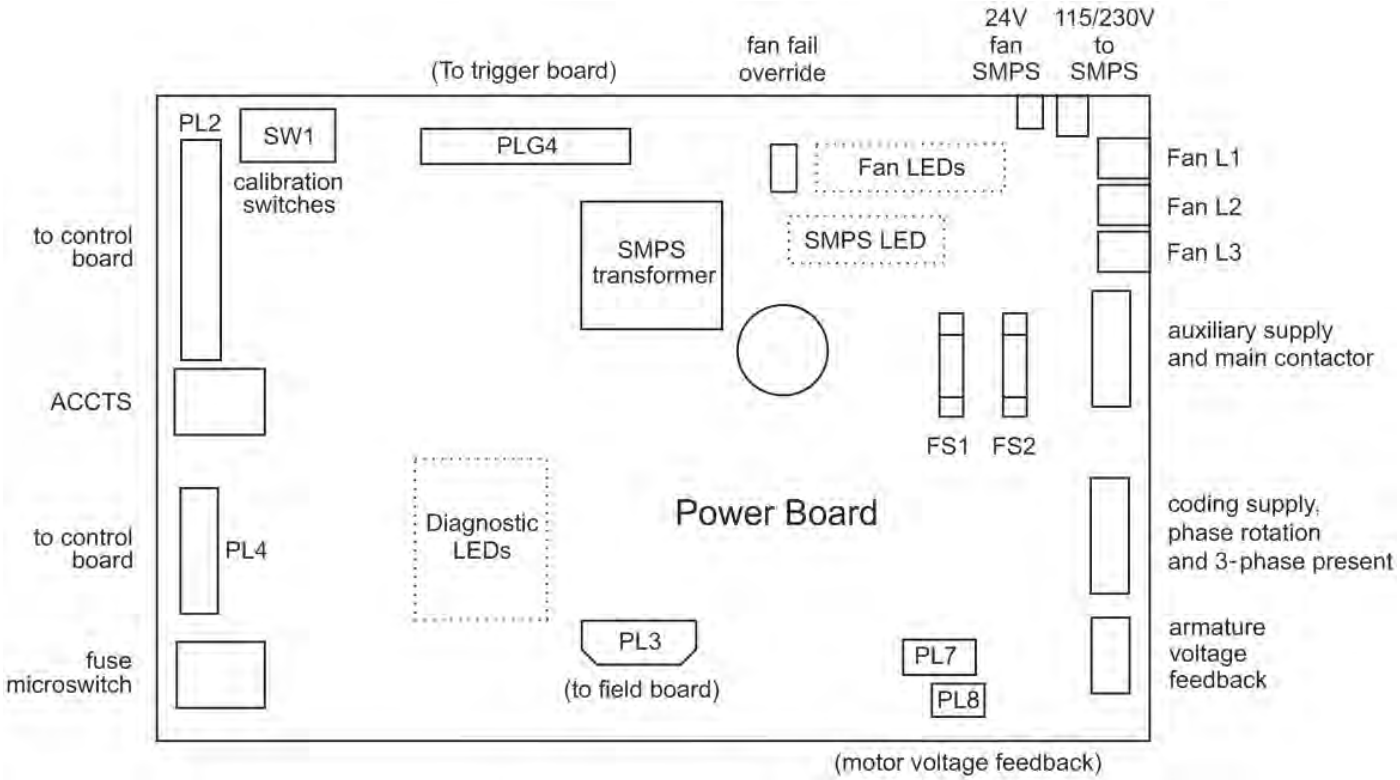

AH466001U001, U101 (Frame H)

(590+ - 4 Quad and 591+ - 2 Quad; Low and High Volt)

Power supplies for the controller are generated from the single phase auxiliary supply via a Switched Mode Power Supply. The incoming supply is directly rectified to provide a high voltage dc power rail. A high voltage transistor switches this rail on to the primary of a high frequency transformer, the output of which is rectified and smoothed to provide the dc power supply rails. The 5V dc rail is monitored via a reference element and a control signal returned via an opto-isolator to the control element of the high voltage switching transistor. The other dc rails (-15V & +24V dc) are generated via separate secondary windings which are rectified and smoothed, with individual linear regulators providing ±15V dc rail. The SMPS operates over an input voltage range of 110V to 240V ac ±10%, 50/60Hz.

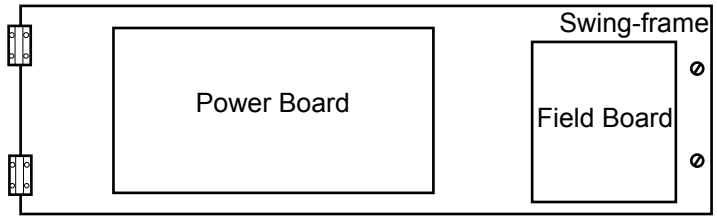

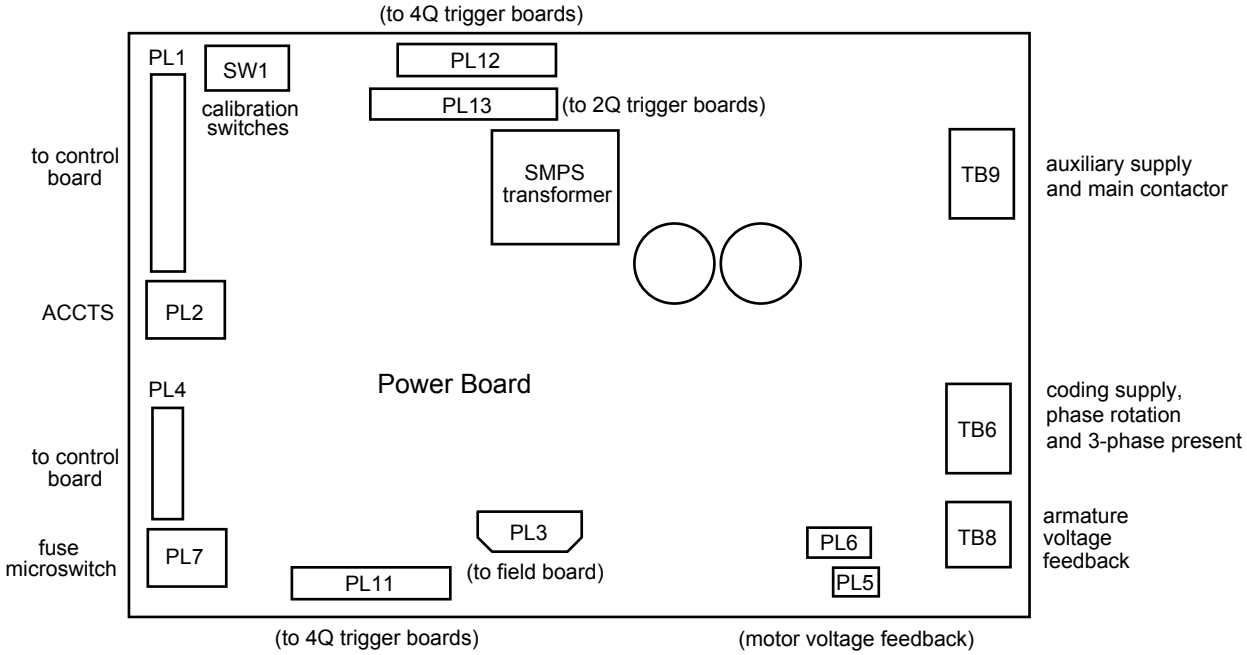

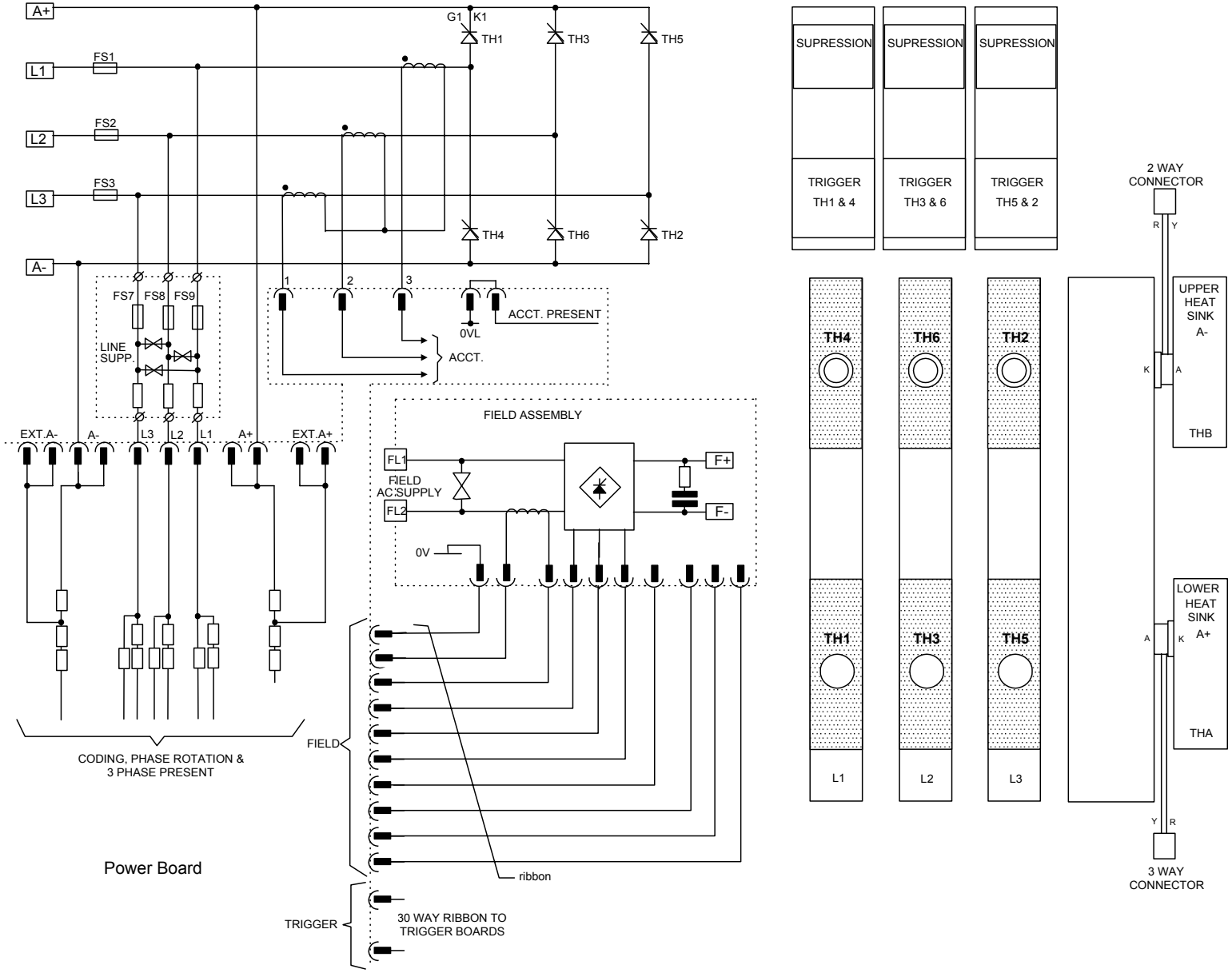

Figure 3- 25 2 Quad Power Circuit – Frame 6 & Frame H Units using AH466001U001

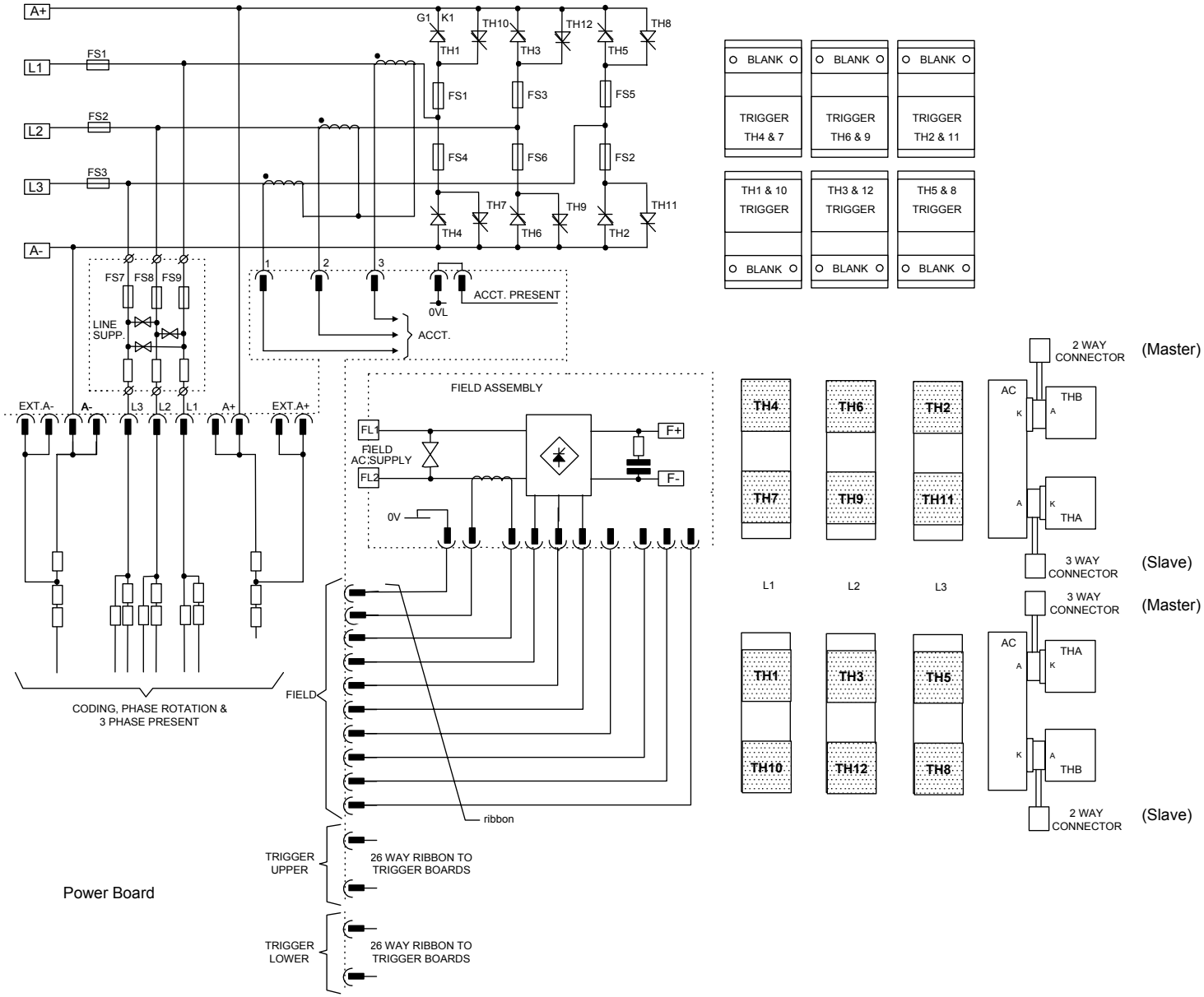

Figure 3- 26 4 Quad Power Circuit – Frame 6 & Frame H Units using AH466001U001

Optional Equipment

Contact your local Parker SSD Drives office to order optional equipment.

Item	Part Number
EMC Installation Guidelines for Modules and Systems *A Parker SSD Drives application manual detailing EMC requirements*	HA388879
590 Digital Section Control *A Parker SSD Drives application manual detailing the use of the block diagram to implement open and closed loop control of driven web section rolls*	HA388664
590 Digital Closed Loop Centre Winder *A Parker SSD Drives application manual detailing the use of the block diagram to implement closed loop centre winders*	HA388202
ConfigEd Lite *Parker SSD Drives' Windows-based block programming software*	Order by name
External AC Supply (RFI) Filter *For Drives without internal filters, on cable runs in excess of 25 metres*	Refer to Appendix E: "External AC Supply (RFI) Filters" for Part Numbers
Microtach Option Board *Two board types for connecting to a plastic or glass fiber Microtach encoder* • *Glass* • *Plastic*	 AH386025U001 AH386025U002
Encoder Option Board *A board to interface to a wire-ended encoder*	AH387775U001 (universal)
Tacho Calibration Option Board *A switchable calibration board for interfacing to AC/DC analog tachogenerators*	AH385870U001
Comms Option Board (P1) Board *Two board types for supporting EI BYSYNCH or PROFIBUS communication protocols for connection to other equipment.* • *EI BYSYNCH (RS422, RS485)* • *PROFIBUS* • *LINK*	 6055/EI00/00 6055/PROF/00 6055/LINK/00

Remote Mounting the Keypad

The 6052 Mounting Kit is required to remote-mount a 6901 or 6911 Keypad. An enclosure rating of IP54 is achieved for the remote Keypad when correctly mounted using the 6052 Mounting Kit.

6052 Mounting Kit Parts for the Remote Keypad

Tools Required

No. 2 Posidrive screwdriver.

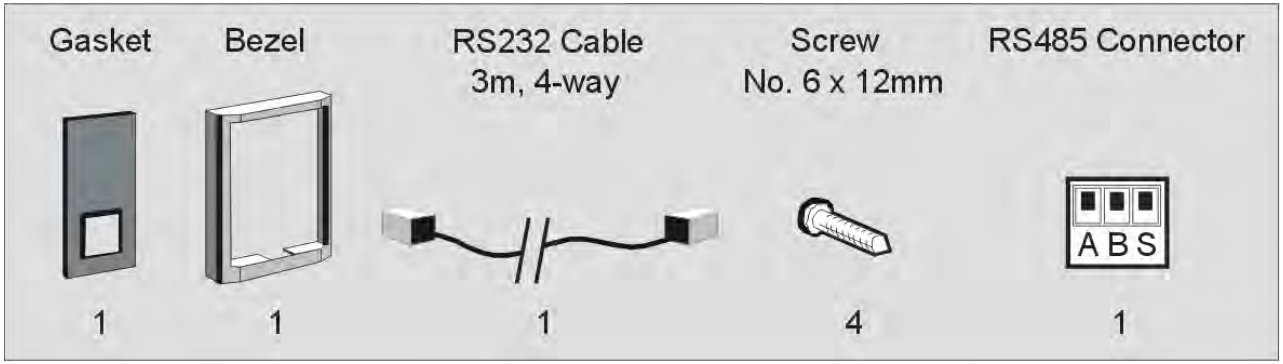

Assembly Procedure

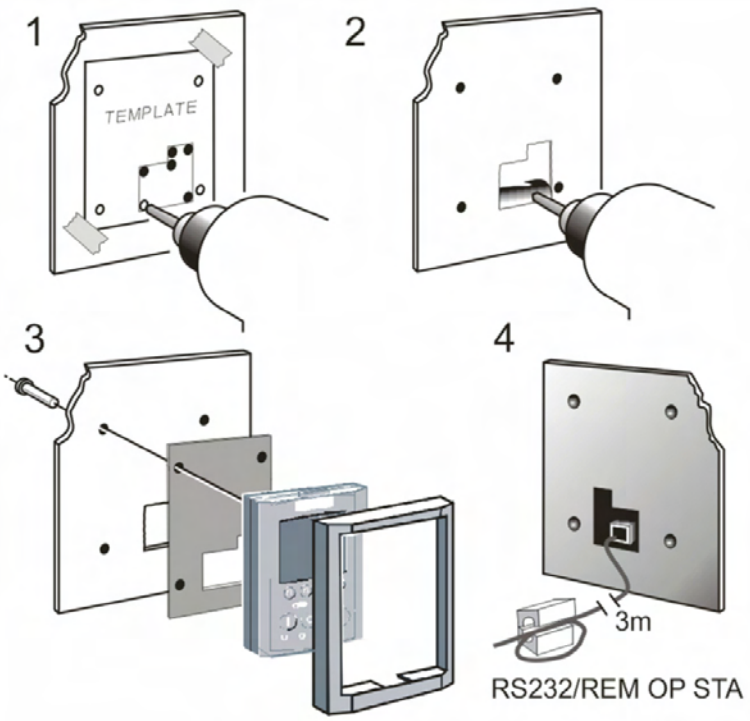

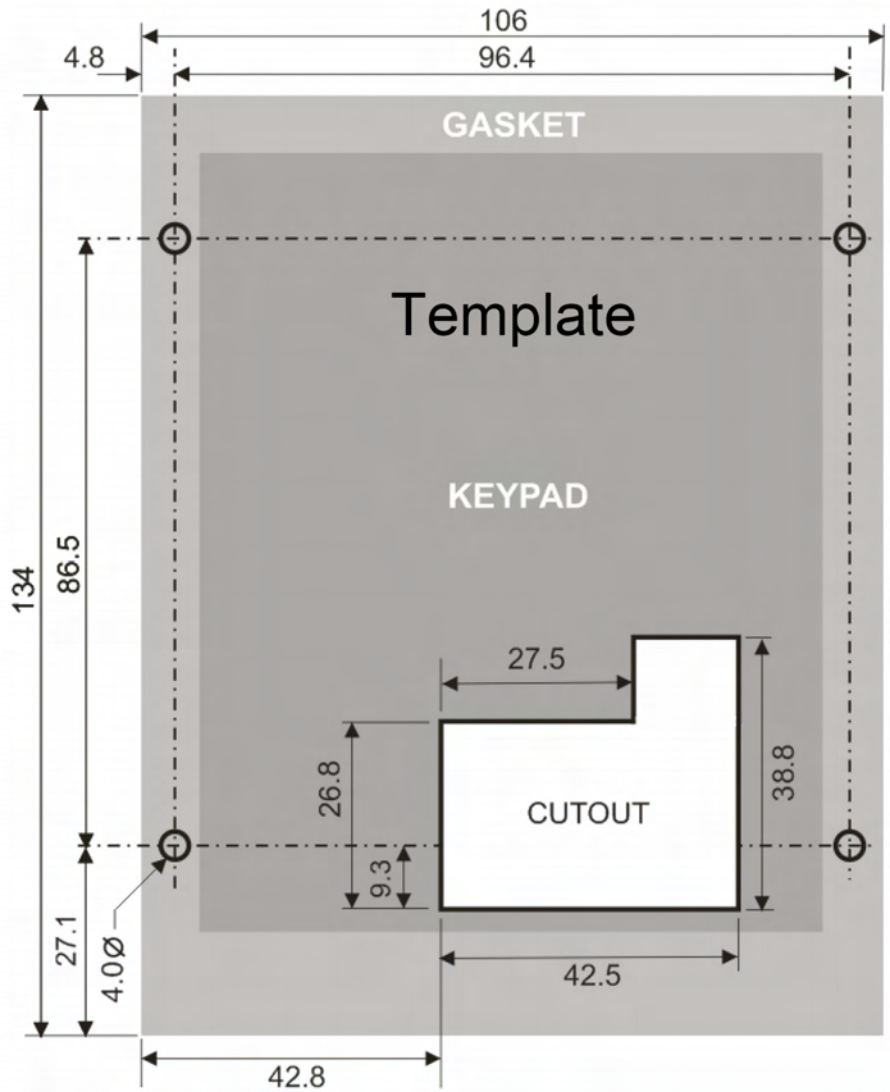

Figure 3- 27 Mounting Dimensions for the Remote-Mounted Keypad

Speed Feedback and Technology Options

The Options are:

1. Speed Feedback (Analog Tacho Calibration Option Board or Microtach/Encoder Feedback Option Card)
2. Communications Technology Box (6055 - LINK II, Profibus, DeviceNet, Serial RS485)

They are plugged into the two positions, as illustrated.

You can operate the Inverter with the Speed Feedback and/or Communications Technology Options.

Refer to the appropriate Technology Option Technical Manual for further information.

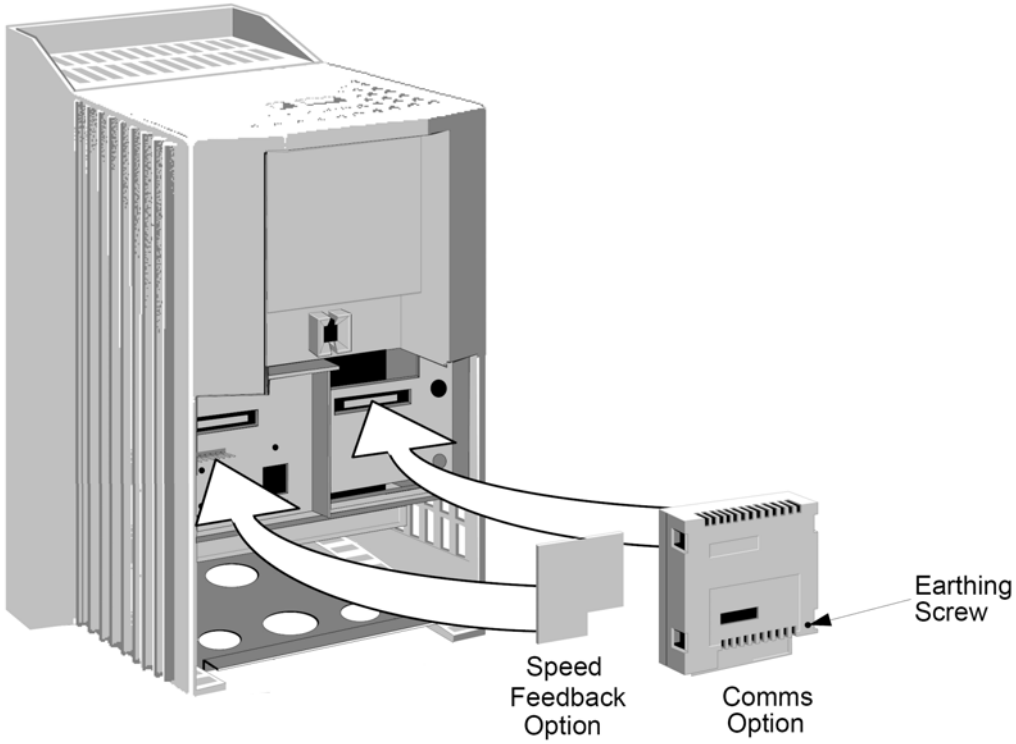

Removal

After removing the earthing screw, remove the COMMS option by carefully pushing a long screwdriver (for instance) under the option and gently levering it out. The pins are protected by the option moulding.

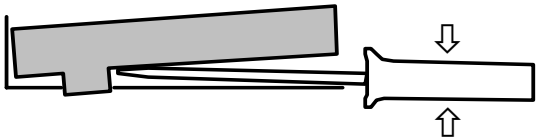

WARNING

Isolate the drive before fitting or removing the options.

Speed Feedback Option Boards

Each option board below is shown with the correct selection for the SPEED FBK SELECT parameter.

The selections are ARM VOLTS FBK, ANALOG TACH, ENCODER and ENCODER/ANALOG.

(ARM VOLTS FBK is default and requires no option board).

MMI Menu Map

1 SETUP PARAMETERS

2 SPEED LOOP

SPEED FBK SELECT

Microtach Option Board

ENCODER

There are two kinds of Parker SSD Drives' Microtach, each requiring a different board:

5701 Microtach (plastic fibre)

5901 Microtach (glass fibre)

If fitted, refer to the Microtach Technical Manual for further information.

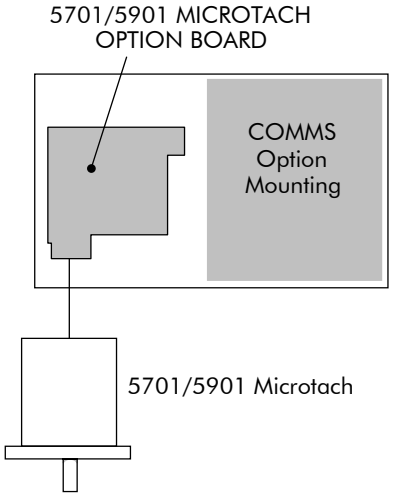

Wire-Ended Encoder Option Board

ENCODER

The board accepts connection from a wire-ended encoder.

If fitted, refer to the Encoder Technical Manual for further information.

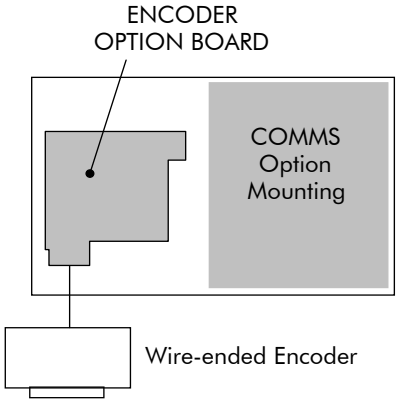

Tacho Calibration Option Board

ANALOG TACH

The board accepts connection from an analog tachogenerator.

If fitted, refer to Chapter 4: "Operating the Drive" - Speed Feedback Option Boards.

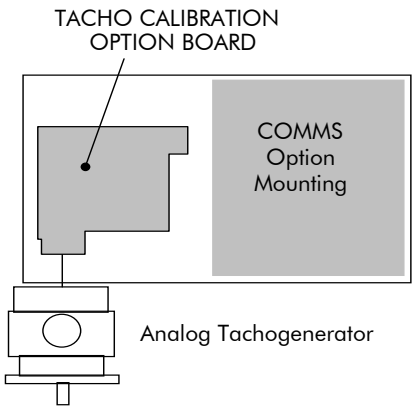

Combined Tacho and Encoder Feedback

ENCODER/ANALOG

If an analog tachogenerator and digital encoder are to be used, the Encoder Option Board receives the digital signal, the analog signal is routed to Terminals B2 (Tacho) and B1 (0V).

Note: External scaling resistors are required for the Analog Tacho Feedback and a shorting link inserted in the analog plug to directly connect terminal B2 to the analog speed feedback input.

Please refer to Parker SSD Drives Engineering Department for assistance with this feature (Special Build - Option 60).

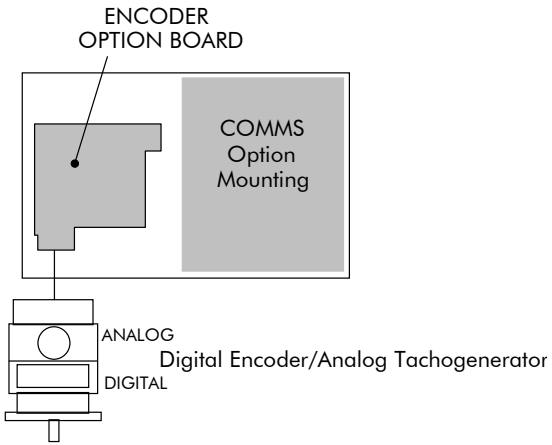

Communications Technology Options

Various protocols are supported, each requiring a different Technology Box. The type of Technology Box fitted is selected in the TYPE parameter:

MMI Menu Map

1 SERIAL LINKS

2 TEC OPTION

TEC OPTION TYPE

- RS485 (EI BINARY, EI ASCII or MODBUS RTU)
- PROFIBUS DP
- LINK
- DEVICENET
- CANOPEN
- LONWORKS

COMMS Option Technology Box

The option allows the DC590+ Drive to be controlled as part of a system.

The system can also comprise other Parker SSD Drives products such as the 605 and 584SV Inverters, or any other equipment using the same protocol.

IMPORTANT : The comms option should not be fitted or removed whilst the product is powered.

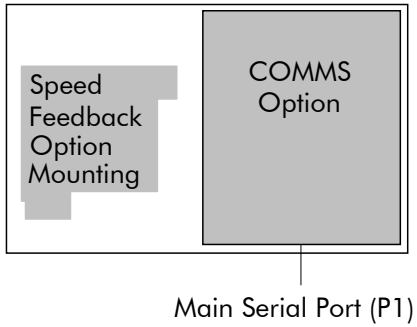

External AC Supply EMC Filter Installation

Refer to Appendix E: "Technical Specifications" - Environmental Details, and External AC Supply (RFI) Filters, and AC Line Choke for selection details.

A filter is used with the Drive to reduce the line conducted emissions produced by the Drive. Filters are used in parallel on the higher current Drives. When installed correctly and used with the specified 2% minimum line chokes, conformance with EN55011 Class A can be achieved (suitable for both generic environments: RF Emission and Immunity).

Cubicle-Mounting the DC590+ Drive with Filter

WARNING

Do not touch filter terminals or cabling for at least 5 minutes after removing the ac supply.

Only use the ac supply filter with a permanent earth connection.

The filter should be fitted on the mains side of the contactor.

The Drive must be mounted vertically on a solid, flat, vertical surface. It must be installed into a cubicle.

The recommended EMC filter is mounted to the left, right, above, below, or spaced behind the Drive. It can be mounted flat against the surface, or projecting out from the surface if the filter type has side fixings.

1. Mount the filter securely at the four fixing points (flat or on its side).
2. Mount the Drive next to the filter, allowing for the required airgap between the Drive, the filter and any adjacent equipment.

Connection Details

The connection between the Drive, choke and filter must always be as short as possible and **must be segregated from all other cables**. Ideally, mount the filter and choke onto the same metallic panel as the Drive. Take care not to obstruct any ventilation spacing.

If this cable/busbar exceeds 0.6m (2 feet) in length, it must be replaced with a screened/armoured cable. The screen/armour must be earthed at both the filter, choke and Drive ends with large-area contact surfaces, preferably with metal cable glands.

You should enhance the RF connection between the Drive, choke, filter and panel as follows:

1. Remove any paint/insulation between the mounting points of the EMC filter, choke, Drive and the panel. Liberally apply petroleum jelly over the mounting points and securing threads. This will prevent corrosion. Alternatively, conducting paint could be used on the panel.
2. If **1** above is not possible, then improve the RF earth bond between the filter and Drive by making an additional RF earth connection. Use wire braid of at least 10mm² cross-sectional area.

NOTE **Metal surfaces, such as anodised or yellow chromed (with cable mounting or 35mm DIN rails, screws and bolts) have a high impedance which can be very detrimental to EMC performance.**

3. A low RF impedance path must be provided between the motor frame and back panel on which the drive, choke and EMC filters are mounted. This low impedance RF path should follow the path of the motor cables in order to minimise the loop area. **Failure to do so will result in increased conducted emissions.**

   A low RF impedance path will normally be achieved by:

   ■ Bonding the armour of the motor supply cables at one end to the motor frame, and at the other end to the cubicle back panel. Ideally 360o bonding is required, which can be achieved with cable glands, refer to Cable Gland Requirements, page 3-10.

   ■ Ensuring that conduit containing the motor supply cables are bonded together using braid. The conduit should also be bonded to the motor frame and the cubicle back panel.

Earthing Details

The protective earth (PE) conductor exiting the filter must be connected to the protective earth connection of the Drive. Any additional RF earth, such as a cable screen, **is not a protective earth**. The EMC filter must be **permanently earthed** to prevent the risk of electric shock under abnormal operating instances (such as the loss of one phase of the ac supply).

You can achieve permanent earthing by either:

- using a copper protective earth conductor of at least 10mm²
- installing a second conductor, in parallel connection with the protective conductor, to a separate protective earth terminal

Each conductor must independently meet the requirements for a protective earth conductor.

Operating Conditions

The recommended EMC filters operate from normal three-phases supplies which are balanced with respect to earth (earth referenced supplies - TN). This minimises the earth leakage current due to the filter capacitors between phase and earth.

IMPORTANT ***We do not recommend the use of ac supply filters on non earth-referenced supplies - IT. The supplies cause earth leakage currents to increase, and interfere with the operation of earth fault monitoring equipment. In addition, EMC performance of the filter is degraded.***

As with all power electronic drives, conducted emissions increase with motor cable length. EMC conformance is only guaranteed up to a cable length of 50m. The cable length can be increased. Refer to Parker SSD Drives for more information.

Earth Fault Monitoring Systems

WARNING

Circuit breakers used with VSDs and other similar equipment are not suitable for personnel protection. Use another means to provide personal safety. Refer to EN50178 (1998) / VDE0160 (1994) / EN60204-1 (1994)

We do not recommend the use of circuit breakers (e.g. RCD, ELCB, GFCI), but where their use is mandatory, they should:

- Operate correctly with dc and ac protective earth currents (i.e. type B RCDs as in BS EN61009-1 : 2004).
- Have adjustable trip amplitude and time characteristics to prevent nuisance tripping on switch-on.

NOTE **When the ac supply is switched on, a pulse of current flows to earth to charge the EMC filter internal capacitors which are connected between phase and earth. This has been minimised in Parker SSD Drives filters, but may still trip out any circuit breaker in the earth system. In addition, high frequency and dc components of earth leakage currents will flow under normal operating conditions. Under certain fault conditions larger dc protective earth currents may flow. The protective function of some circuit breakers cannot be guaranteed under such operating conditions.**

Frame 6: Assembly and Installation

Output Currents (armature): Frame 6
1250A 1600A 1950A

All units are available as a:

590+ : 4Q 3-phase, fully controlled, anti-parallel thyristor bridge configuration
591+ : 2Q 3-phase, fully controlled thyristor bridge configuration

The DC590+ Frame 6 is a high power DC drive and is supplied as a kit of parts ready for mounting onto the back panel of an enclosure. The drive can be arranged to have the AC input terminals either at the top or the bottom of the drive.

NOTE **The phase assemblies must always be mounted with the fans at the bottom, however, the AC Supply Terminals can be moved to the top of the drive. Refer to page 3-67.**

A kit contains three phase assemblies (each having the same rating), a control panel assembly, and fishplates. Fishplates are used to inter-connect the DC outputs of the three phase assemblies to produce a 6-pulse stack.

The control panel assembly mounts onto the front of the phase assemblies. The signals to-and-from the control panel assembly provide the operation of the drive.

Phase assemblies are available in three different ratings, at two different voltages, and in a two thyristor (2Q, non-regenerative) or four thyristor (4Q, regenerative) configuration.

When constructed, the drive is physically the same size for all ratings or configuration.

Dimensions

Refer to Lifting the Drive, page 3-1.

Cubicle Details

The drive must be mounted inside a cubicle that complies with the European safety standards VDE 0160 (1994)/EN50178 (1998) - it must require a tool for opening.

Cooling

The assembled drive produces power (heat) losses of approximately 3 times the rated power output current. For example, a 2000A output current will produce a power loss of 6000W.

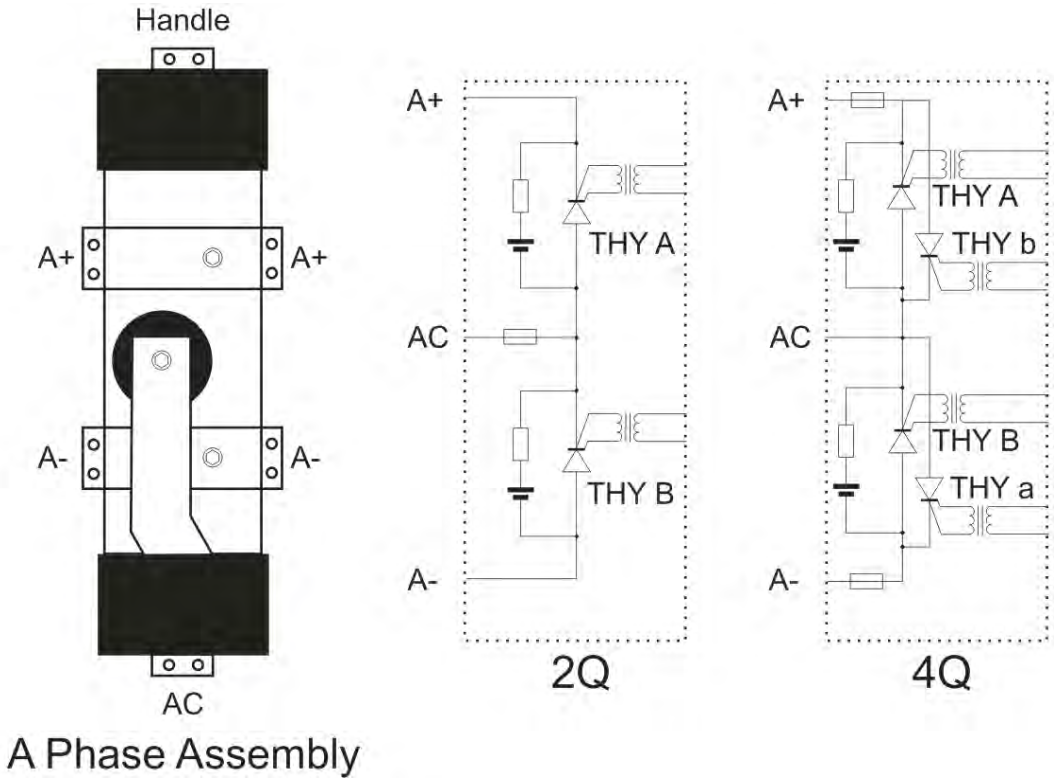

A Phase Assembly

It is necessary to remove this heat by fitting fans in the roof of the enclosure. A suitable fan assembly is available from Parker SSD Drives, part number LA466038. The assembly contains two fans that can be connnected in parallel or series to achieve 115Vac or 230Vac operation.

Fan Rating : 115V ac 50Hz, 1.67A, 177W, 2750 rpm, motor run capacitor 18µF.

Assembly

Caution

Use proper lifting techniques when lifting and moving the unit.

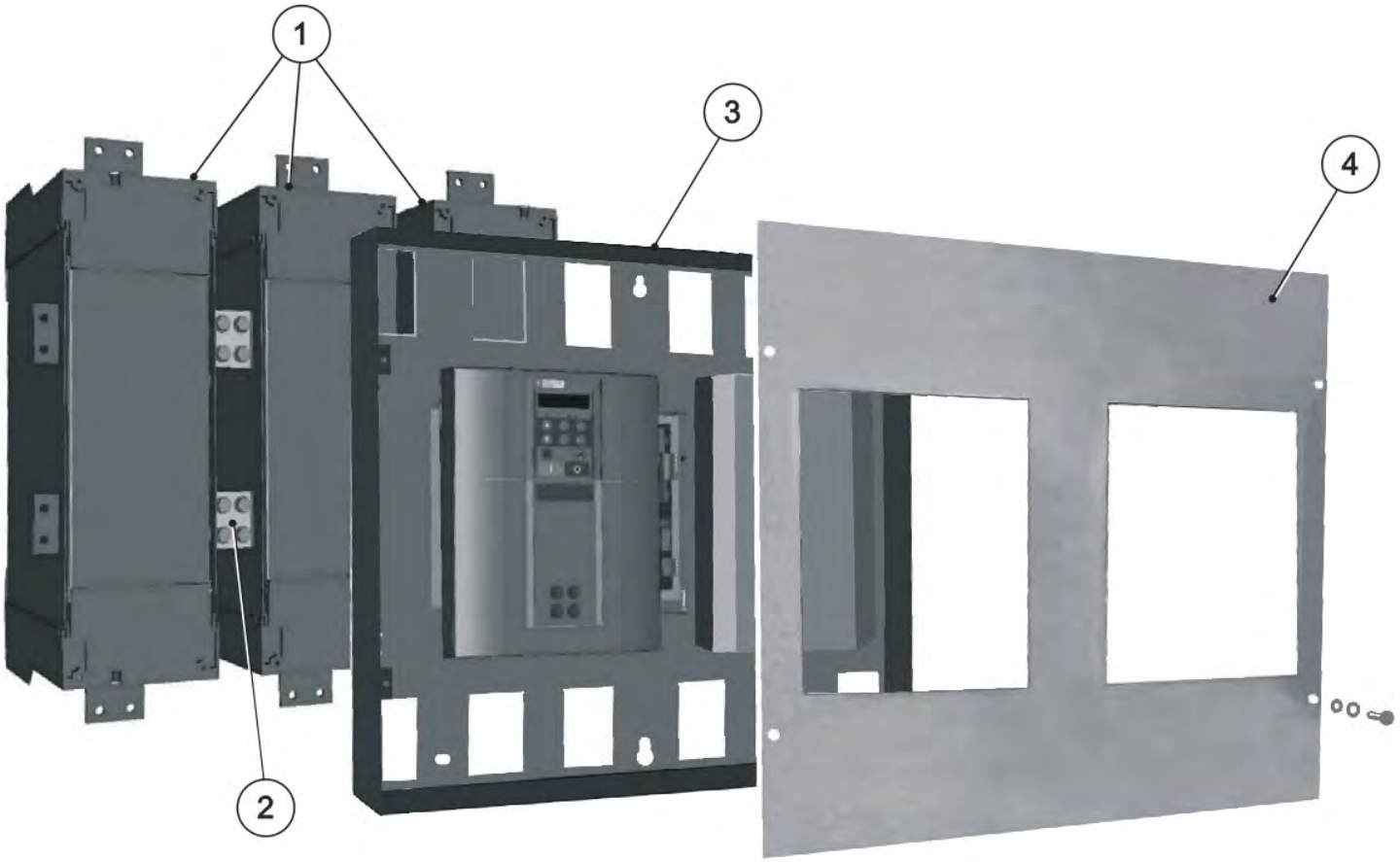

1	Phase assemblies - L1, L2, L3	3	Control Panel Assembly
2	Fishplate	4	Front Cover

The drive is assembled in the following order:

1. Mount the phase assemblies onto the backplate
2. Inter-connect the phase assemblies using the fishplates
3. Secure the control panel assembly onto the phase assemblies
4. Connect all signal cables and ribbons
5. Fit the front cover
6. Connect the plugs for the control wiring, auxiliary supply and field connections

To prepare for installation:

1. Remove the push-fit control terminals (A) from the control panel assembly.
2. Unscrew and remove the Power Terminals (B).
3. Remove the four screws and washers (C) securing the front cover to the control panel assembly.
4. Remove the front cover (D) from the control panel assembly.

Moving the AC Supply Terminals

The AC supply terminals - L1, L2 & L3 - can be made available at the top or bottom of the drive. The factory-delivered drive has the AC terminals in the lower position.

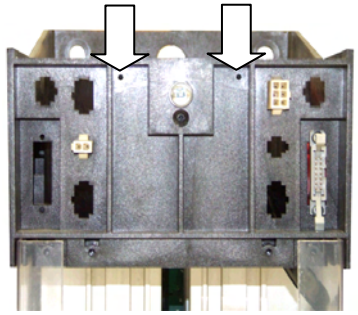

It only takes a few minutes to rotate the AC terminals to the upper position.

1. Remove the fixings that secure the Phase Assembly front cover.
2. Remove the two screws on the front of the phase assembly moulding that secure the handle in place. The handle is located at the top of the phase assembly. It looks like another AC terminal but it is electrically isolated. It is there to assist in handling the phase assembly and is used when securing the stabilising bracket. Refer to "Offering-Up the Phase Assemblies", page 70.
3. Withdraw the handle from the phase assembly.
4. Slowly remove the central bolt and washer from the AC busbar and catch the ACCT and large rubber washer that are secured by the bolt. Remove the ACCT and large rubber washer.
5. Withdraw the AC busbar from the phase assembly.
6. Flip the AC busbar over (see opposite) and slide the AC busbar into position through the end of the Phase Assembly (upper position) and secure the ACCT and large rubber washer with the central bolt and washer. Torque to 42Nm (31 ft.lbf).
7. Fit the handle to the lower position and secure using the two screws. Hand-tighten.
8. Refit the Phase Assembly front panel and secure with four screws and washers.

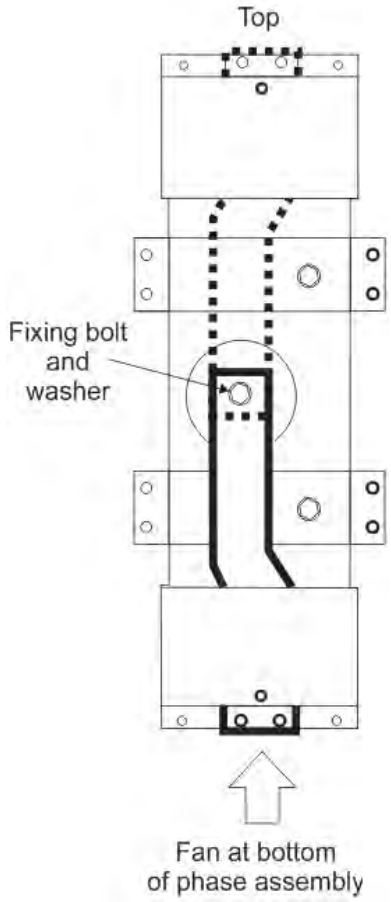

Mounting the Phase Assemblies

The three phase assemblies are mounted vertically onto a solid, flat, vertical backplate inside the cubicle, with the fans at the bottom.

Temporary Hanging: A temporary hanging point is provided to hang the unit on before securing the phase assembly to the backplate at the four corners.

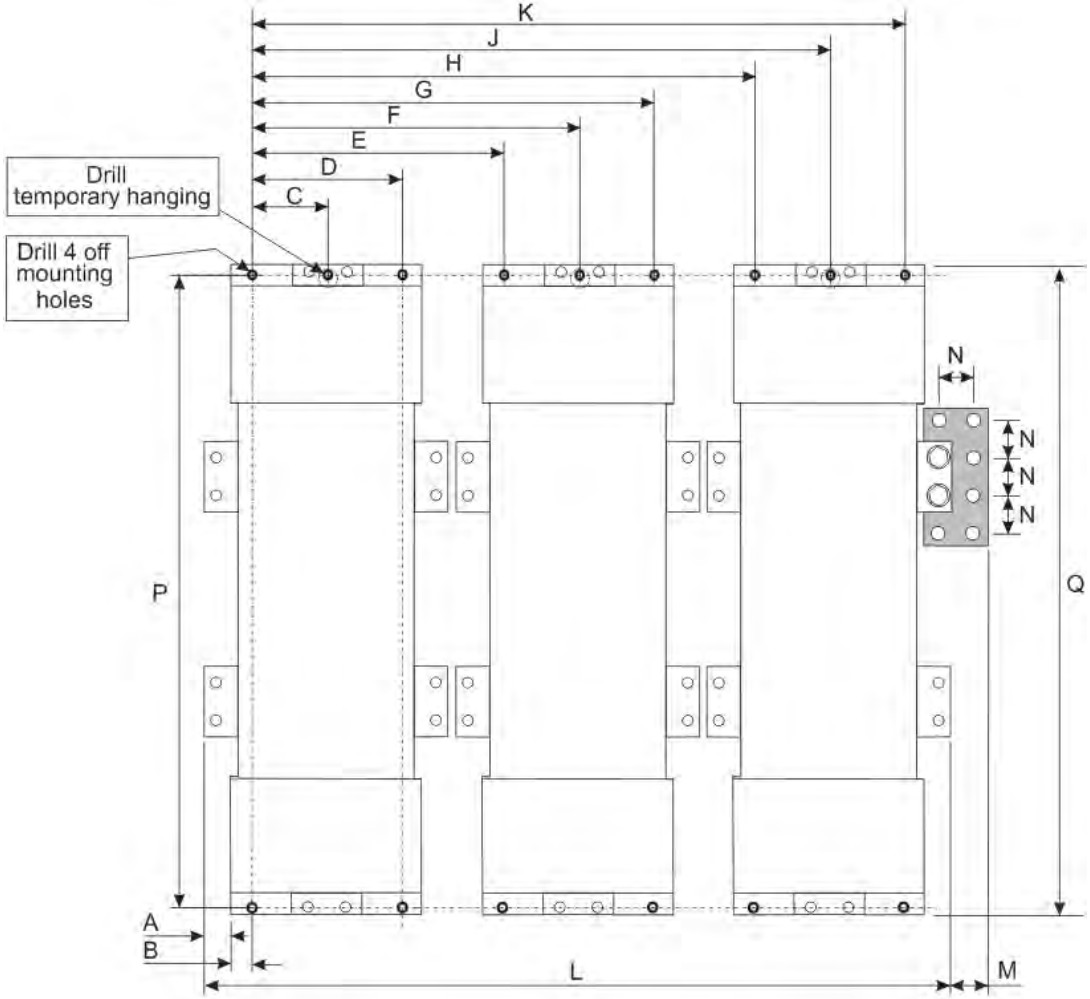

A	B	C	D	E	F
24 (0.94)	23 (0.91)	72 (2.83)	144 (5.67)	247.5 (9.74)	319.5 (12.58)
G	H	J	K	L	M
391.5 (15.41)	495 (19.49)	567 (22.32)	639 (25.16)	732 (28.82)	35.5 (1.40)
N	P	Q			
35 (1.38)	678 (26.69)	712 (28.03)			
Dimensions are in millimetres (inches)					

Backplate Drilling Procedure

Cover any units already mounted to the backplate to protect them from stray metal filings before drilling the mounting holes.

Refer to the diagram on the previous page and drill the mounting holes into the backplate. The holes must be positioned accurately.

For each phase assembly:

- Drill 5 holes to suit M10 flush-fitting inserts. Fit the nut inserts.

IMPORTANT ***The nut inserts** MUST **be flush-fitting so that the phase assembly foot rests on the backpanel. If the phase assembly is mounted incorrectly it will damage the moulding.***

Connecting the Fishplates

Before fitting the Phase Assemblies to the back panel, loosely fit the fishplates to the right hand side terminals (A+, A-) of each Phase Assembly.

The fishplates are fitted with M10 nut inserts. Secure the fishplates **behind** the terminals using M10 bolts (8:8 steel grade) and spring disc washers (preferred, or single coil spring washer). Hand tighten only.

Fitting the fishplate behind the terminal allows the phase assembly to easily be lifted away from adjacent phase assemblies and any associated busbar connections.

NOTE **8:8 minimum steel grade bolts are recommended for all busbar connections and mounting duties.**

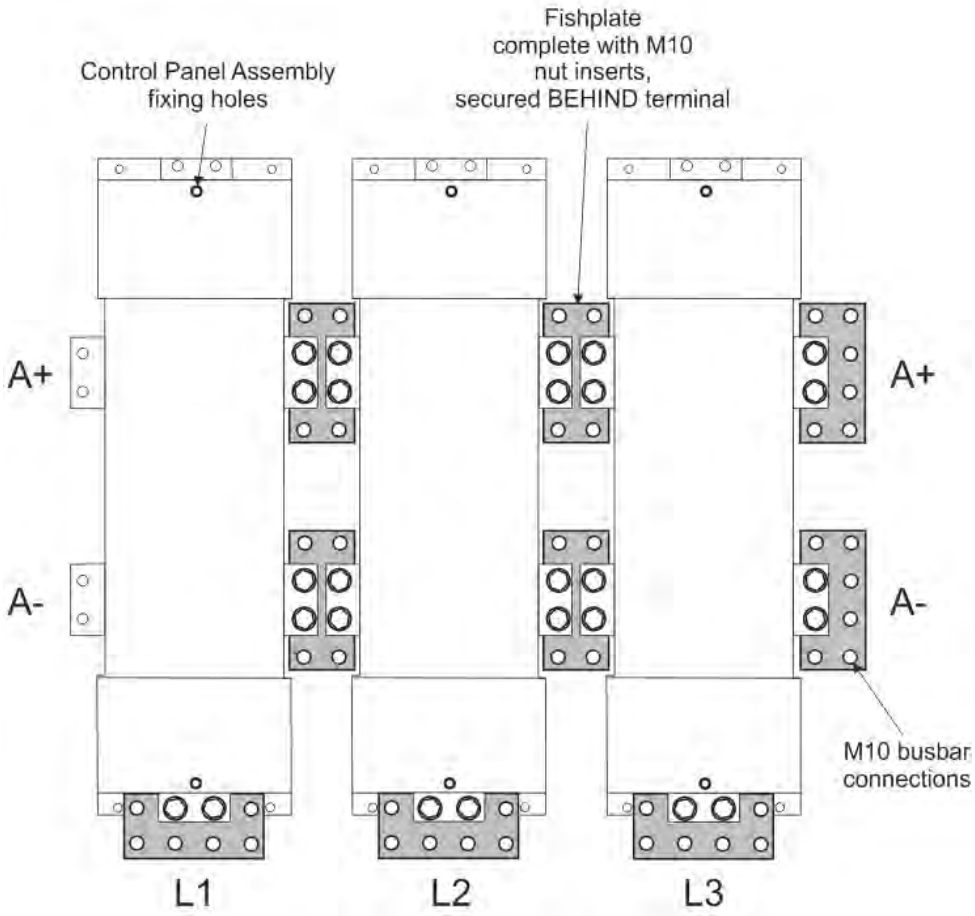

Temporary Hanging Bolts

IMPORTANT ***We strongly recommend using the temporary mounting hole to hang the unit on the backplate - the phase assemblies are heavy. This mounting point is*** *not intended for permanent fixing.*

- Fit M10 x 20mm long bolts to the three "temporary hanging" mounting holes. Screw them in part of the way so that you can still see 12mm of thread.

The phase assembly will temporarily hang on this portion of thread.

Offering-Up the Phase Assemblies

The phase assemblies are heavy. Use a proper lifting procedure to load them on to the fork lift. Note that the Phase Assembly is fitted with a handle, opposite the AC terminal, to improve handling.

A stabilising bracket is supplied to steady the phase assembly when using the fork lift. Secure the bracket to the AC terminal using two M10 bolts as shown below.

For each phase assembly:

- Lift the phase assembly by fork lift and hang it on the "temporary hanging" bolt.
- Secure the phase assembly on the backplate using 4 off M10 bolts and lock washers. Hand tighten only.
- Remove the "temporary hanging" bolt.
- Remove the stabilising bracket.

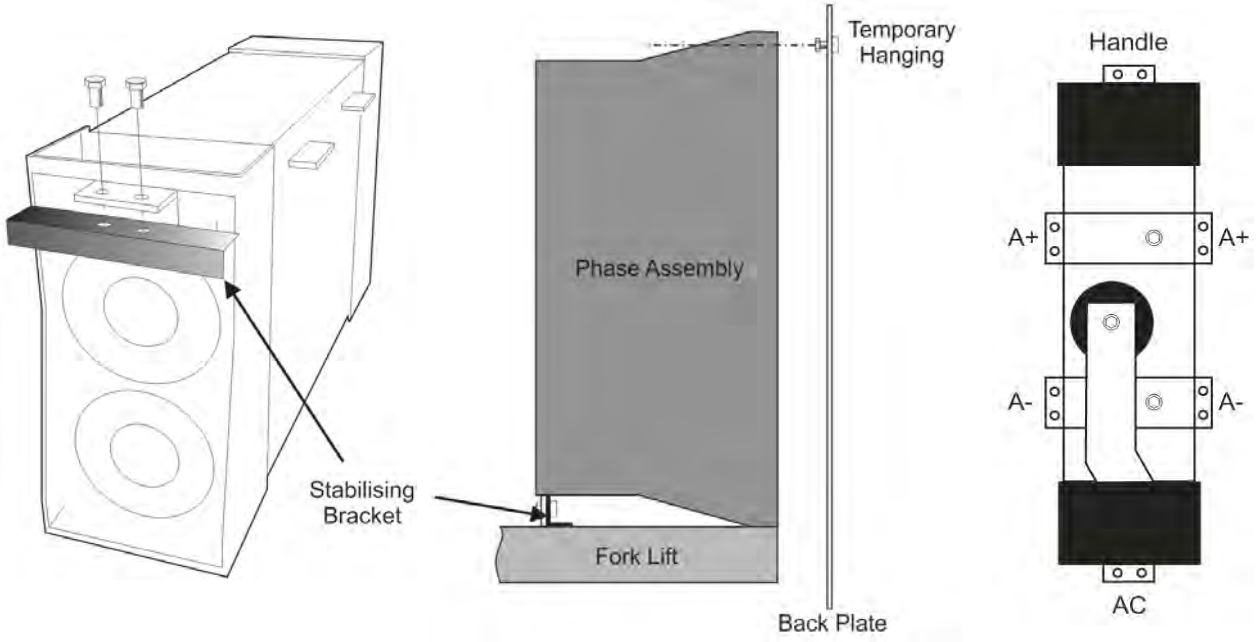

Attach the remaining fishplates:

- To DC motor terminals A+ and A- (whichever pair are to be used)
- To L1, L2 and L3 AC supply terminals

Tightening the Drive

When all the bolts are in place, tighten them to the following torques:

- mounting bolts (4 per phase assembly) : 32Nm (23.6 ft.lbf)
- fishplate bolts : 32Nm (23.6 ft.lbf)

Reminder : Remove the "temporary hanging" bolts.

Fitting the Control Panel Assembly

Fit the M6 x 16mm support screw assemblies [screw, single coil spring washer & plain washer] (A) to the central phase assembly (as shown opposite) and to the equivalent position at the bottom of the phase assembly. Screw them in only part of the way so that the control panel assembly can hang from them.

Offer-up the control panel assembly and hang it from the two central support screws (A).

Secure the gantry using the M6 x 16mm support screw assemblies (B).

Tighten all screws to 4.5Nm (3.3 ft.lbf).

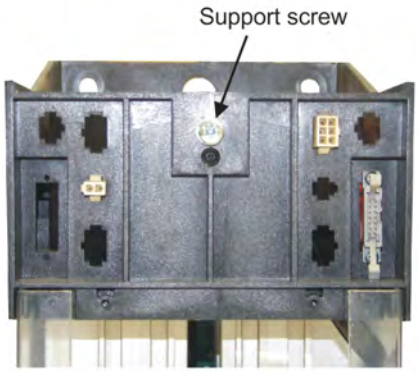

Top of central phase assembly

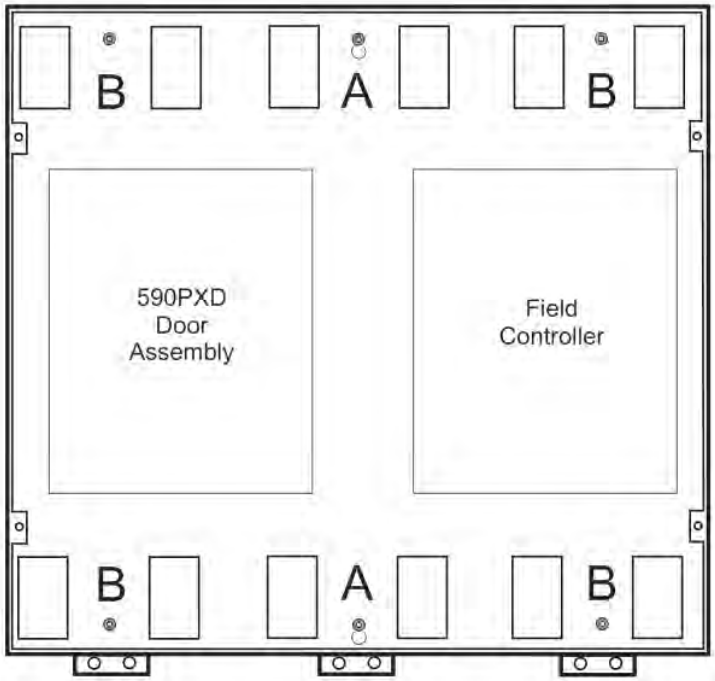

Terminal Connections

The control panel assembly has connectors for each phase assembly. These are secured in such a way that the cables will only reach the correct terminals set: 1, 2, 3 or 4.

NOTE **Terminal sets 3 & 4 feature similar 6-way connectors, however one is a male connector and the other a female, so they can't be fitted incorrectly.**

Complete the same connections for each phase assembly, plus make the additional armature voltage feedback connection to the central Phase Assembly (shown below). Make sure the terminals are clipped together correctly.

Fit the push-fit control terminals (A) from the control panel assembly. Fit the screw-in power terminals (B).

This completes the building of the DC590+ Drive (other than attaching the front cover).

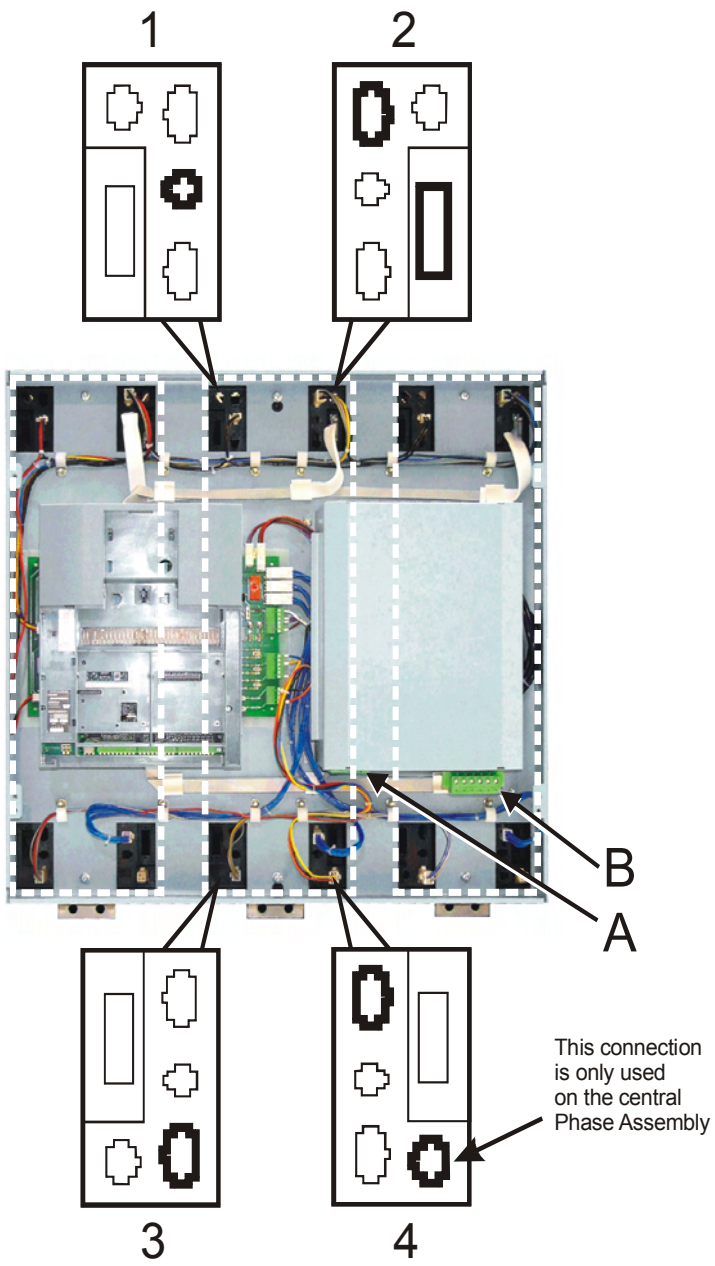

Electrical Installation

IMPORTANT: ***Please read the Safety Information on page Cont. 3 & 4 before proceeding.***

Refer to Electrical Installation, page 3-9 to continue with the drive installation.

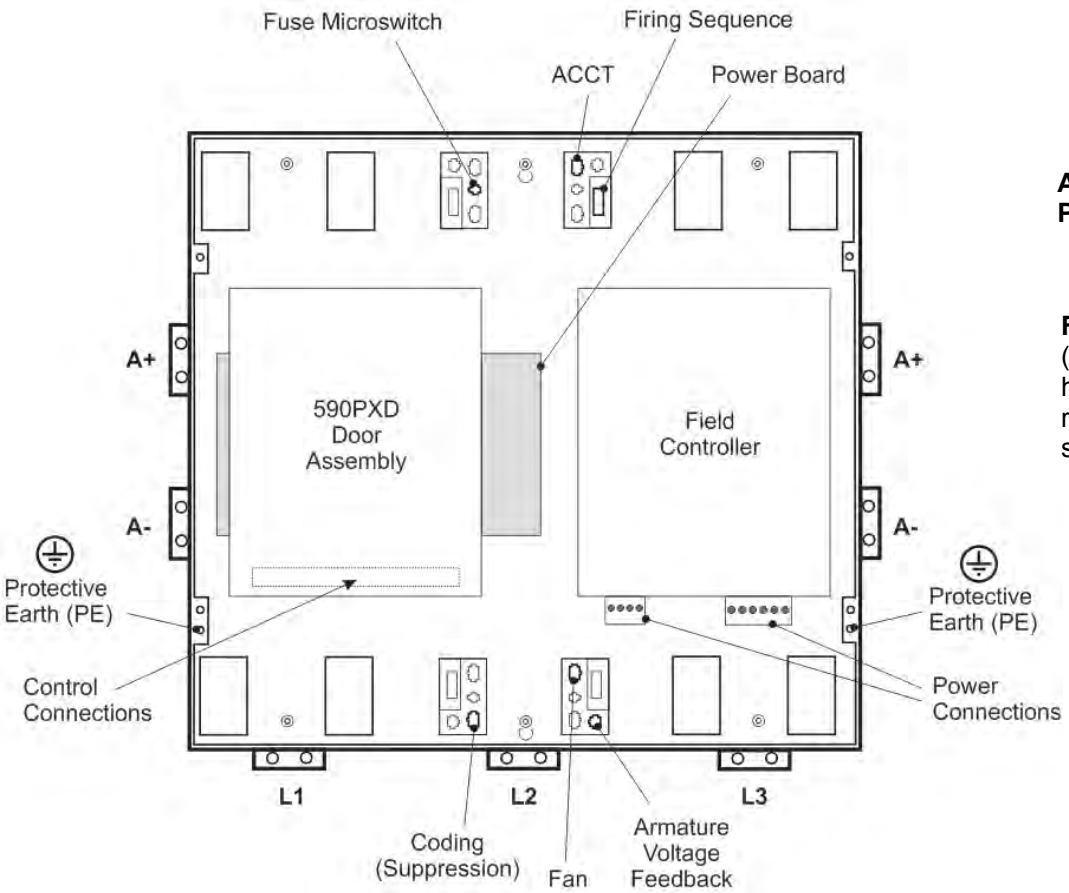

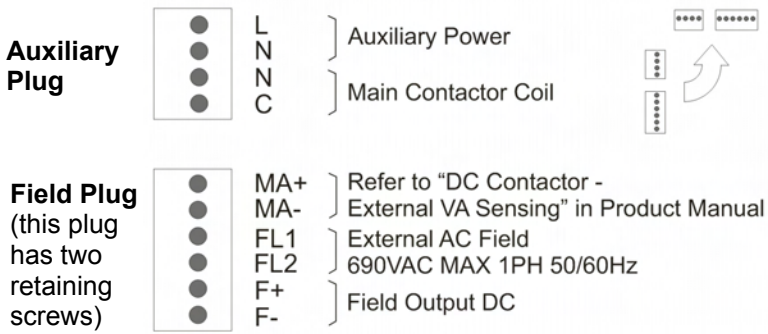

Power Connections

Control Connections

Frame H: Additional Information

Removing the Cover (Frame H)

The cover is manufactured from sheet metal and weighs:-

- 2Q Non-Regenerative = 10kg (22 lbs)
- 4Q Regenerative = 15kg (33 lbs)

To remove the cover use a flat headed screwdriver to undo the two screws at the base of the cover.

Now lift the cover base outwards and upwards, once the cover has been raised two centimetres it can now be removed.

To replace the cover follow the procedure in reverse, engaging the locating studs at the top, moving into final location and tightening fixing screws.

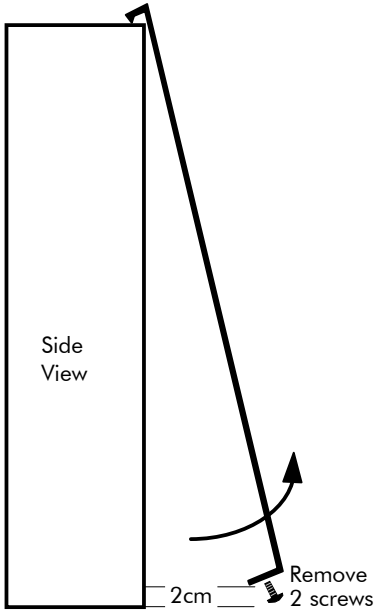

NOTE **This cover is essential for the correct cooling of the drive. If it is not replaced after installation, the drive will overheat.**

Changing DC Output Terminals (Frame H)

- Remove the left-hand cover plate(s) and retain the cover and screws.
- Remove and retain the 12 M6 nuts clamping the outgoing terminals to the cross plates.
- Remove the 12 M6 bolts securing the outgoing busbar assembly. Remove the assembly.
- Carefully remove the gasket(s) for use on the left-hand side.
- Refit the cover to the right-hand side of the drive. Refit the gasket to the left-hand side of the drive.
- Refit the terminal assemblies.

NOTE **The 2Q terminal assembly is not polarised and may be fitted in any orientation. The 4Q terminal assemblies are handed and must be reversed to fit on the left-hand side.**

- Move the terminal markers as appropriate, the A+ terminal will still be at the bottom or AC input at the end of the product.
- **Tighten terminal assembly bolts to the torque given in Appendix E: "Technical Specifications" - Termination Tightening Torque (Frame H).**

Installation Drawings

Drive Installation Drawings

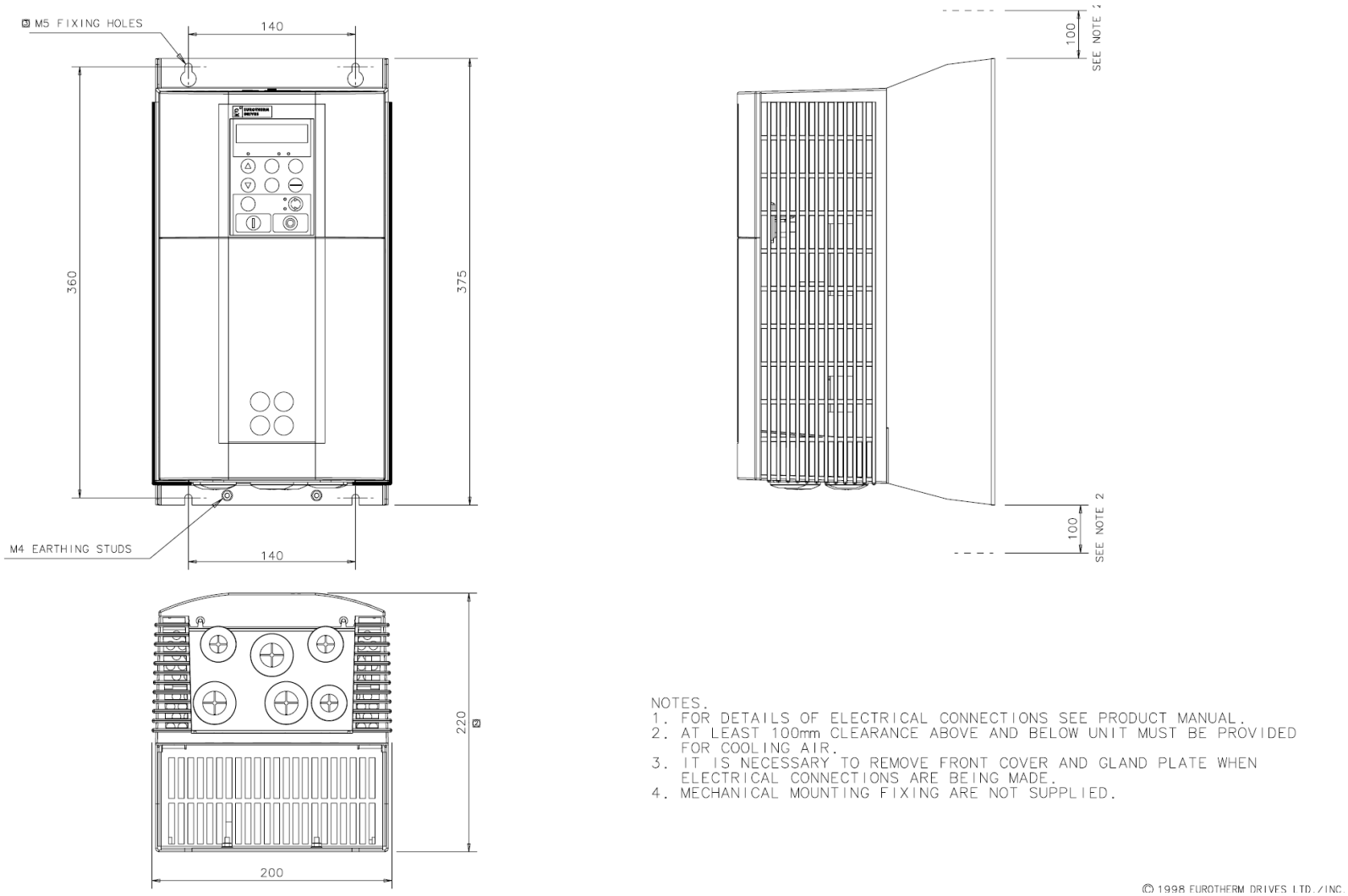

Figure 3- 28 Frame 1 : 15A & 35A Stack Assembly – Drg. No. HG466465

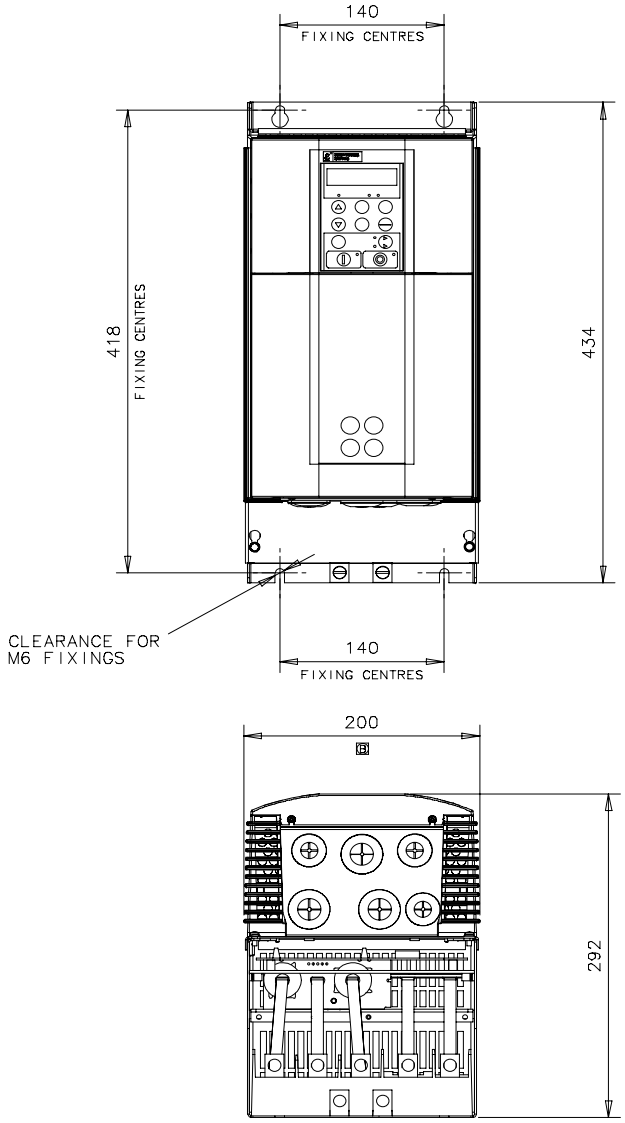

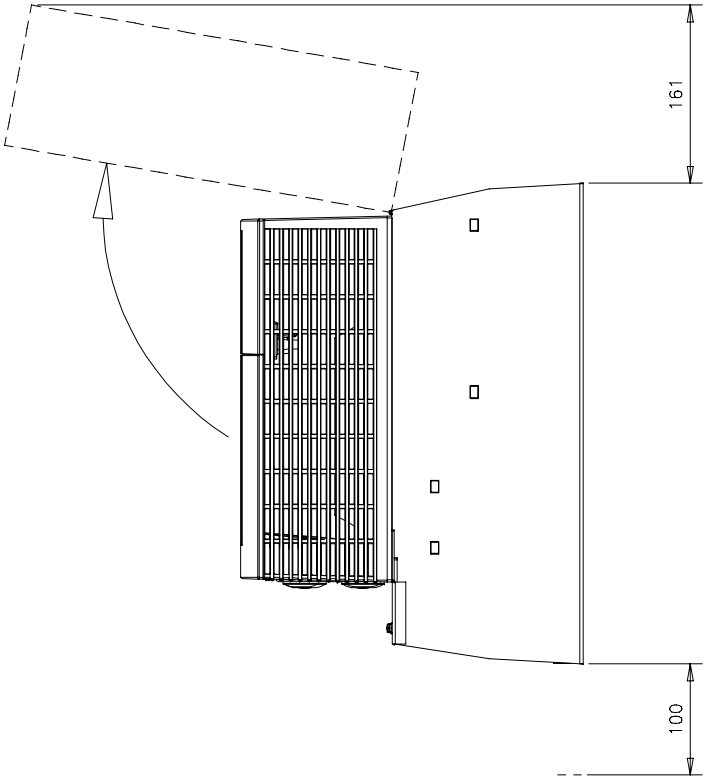

NOTES
1. FOR DETAILS OF ELECTRICAL CONNECTIONS SEE MANUAL.
2. AT LEAST 161mm CLEARENCE ABOVE UNIT MUST BE PROVIDED FOR INSTALLATION.
3. AT LEAST 100mm CLEARENCE BELOW UNIT MUST BE PROVIDED FOR AIR COOLING.
4. IT IS NECESSARY TO REMOVE COVER AND TERMINAL COVER WHEN ELECTRICAL CONNECTIONS ARE BEING MADE.
5. MECHANICAL MOUNTING FIXINGS ARE NOT SUPPLIED.

Figure 3- 29 Frame 2 : 40A-165A Stack Assembly

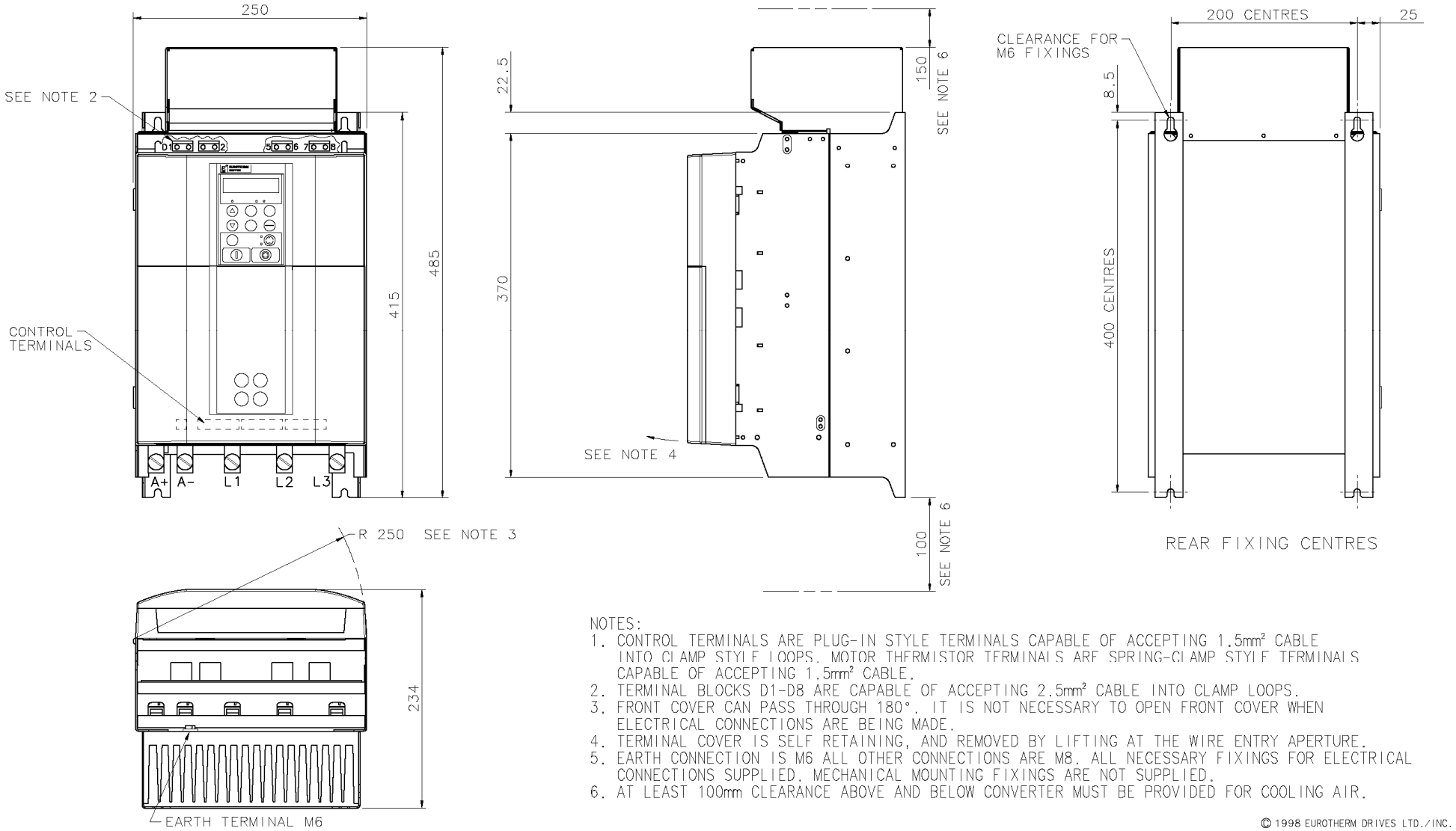

Figure 3- 30 Frame 3 : 180A Stack Assembly - Drg No. HG466427

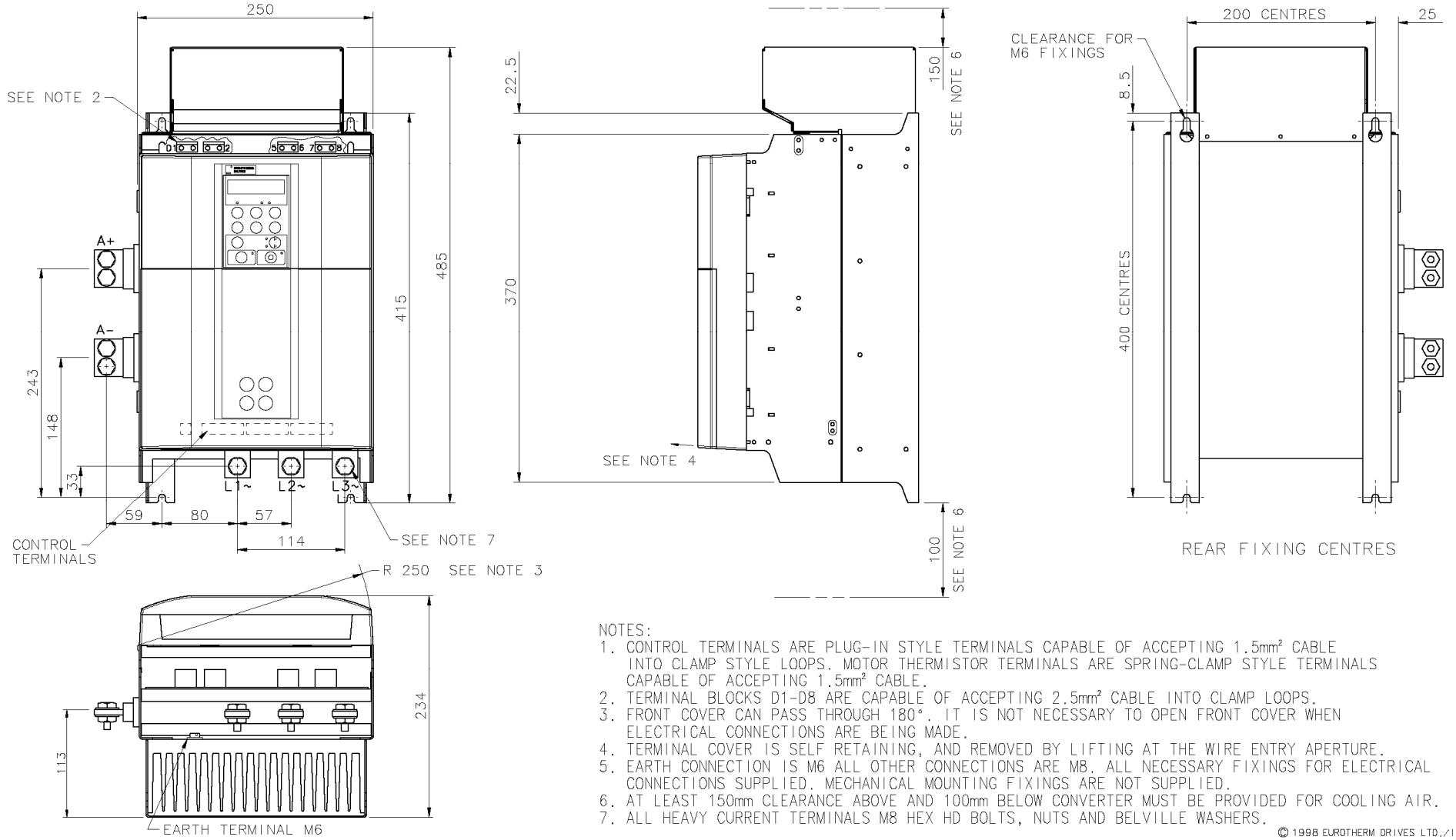

NOTES:
1. CONTROL TERMINALS ARE PLUG-IN STYLE TERMINALS CAPABLE OF ACCEPTING 1.5mm² CABLE INTO CLAMP STYLE LOOPS. MOTOR THERMISTOR TERMINALS ARE SPRING-CLAMP STYLE TERMINALS CAPABLE OF ACCEPTING 1.5mm² CABLE.
2. TERMINAL BLOCKS D1-D8 ARE CAPABLE OF ACCEPTING 2.5mm² CABLE INTO CLAMP LOOPS.
3. FRONT COVER CAN PASS THROUGH 180°. IT IS NOT NECESSARY TO OPEN FRONT COVER WHEN ELECTRICAL CONNECTIONS ARE BEING MADE.
4. TERMINAL COVER IS SELF RETAINING, AND REMOVED BY LIFTING AT THE WIRE ENTRY APERTURE.
5. EARTH CONNECTION IS M6 ALL OTHER CONNECTIONS ARE M8. ALL NECESSARY FIXINGS FOR ELECTRICAL CONNECTIONS SUPPLIED. MECHANICAL MOUNTING FIXINGS ARE NOT SUPPLIED.
6. AT LEAST 150mm CLEARANCE ABOVE AND 100mm BELOW CONVERTER MUST BE PROVIDED FOR COOLING AIR.
7. ALL HEAVY CURRENT TERMINALS M8 HEX HD BOLTS, NUTS AND BELVILLE WASHERS.

© 1998 EUROTHERM DRIVES LTD./1

Figure 3- 31 Frame 3 : 270A Stack Assembly - Drg No. HG466428

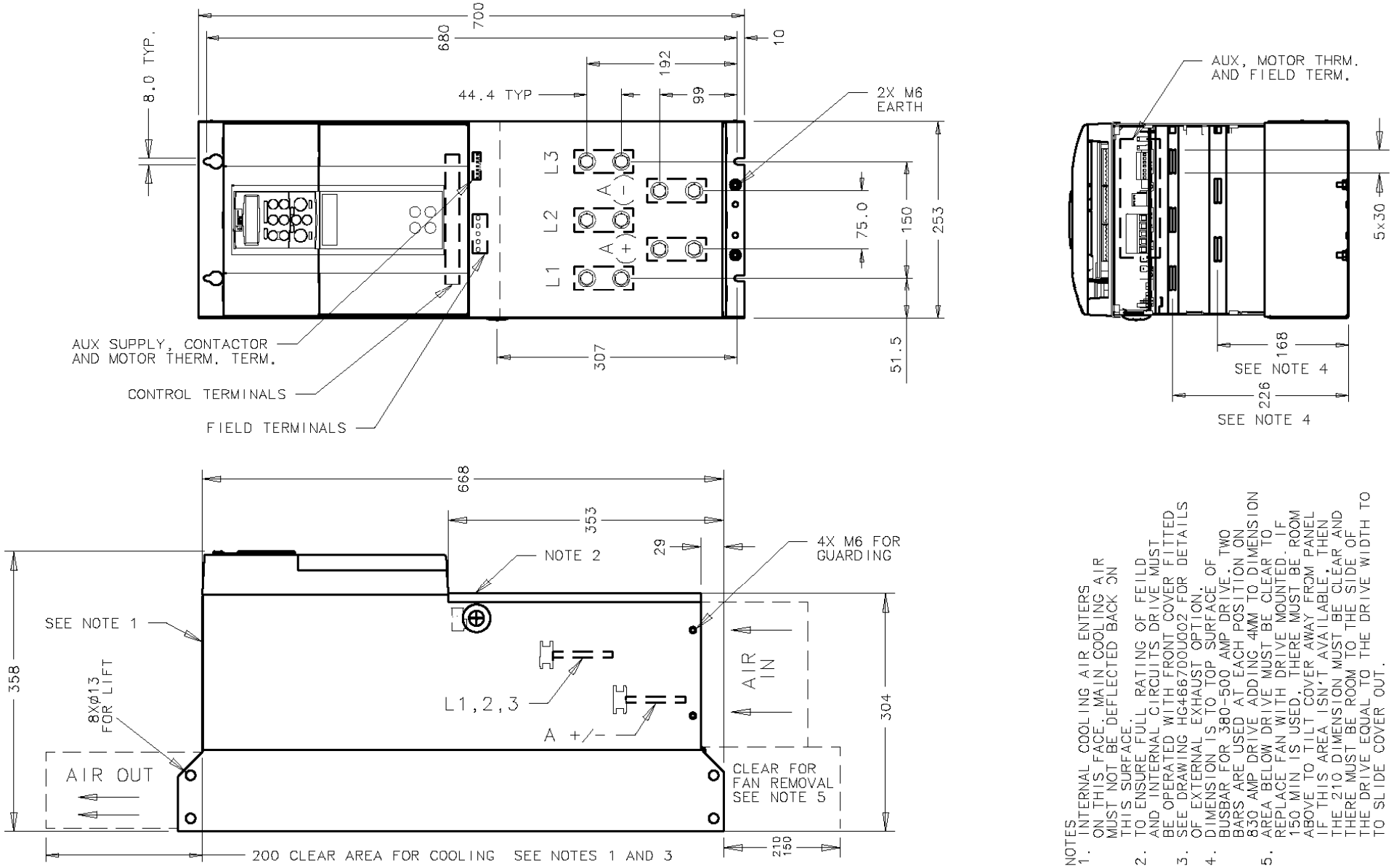

Figure 3- 32 Frame 4 : 380-830A Stack Assembly – Drg. No. HG466700U001

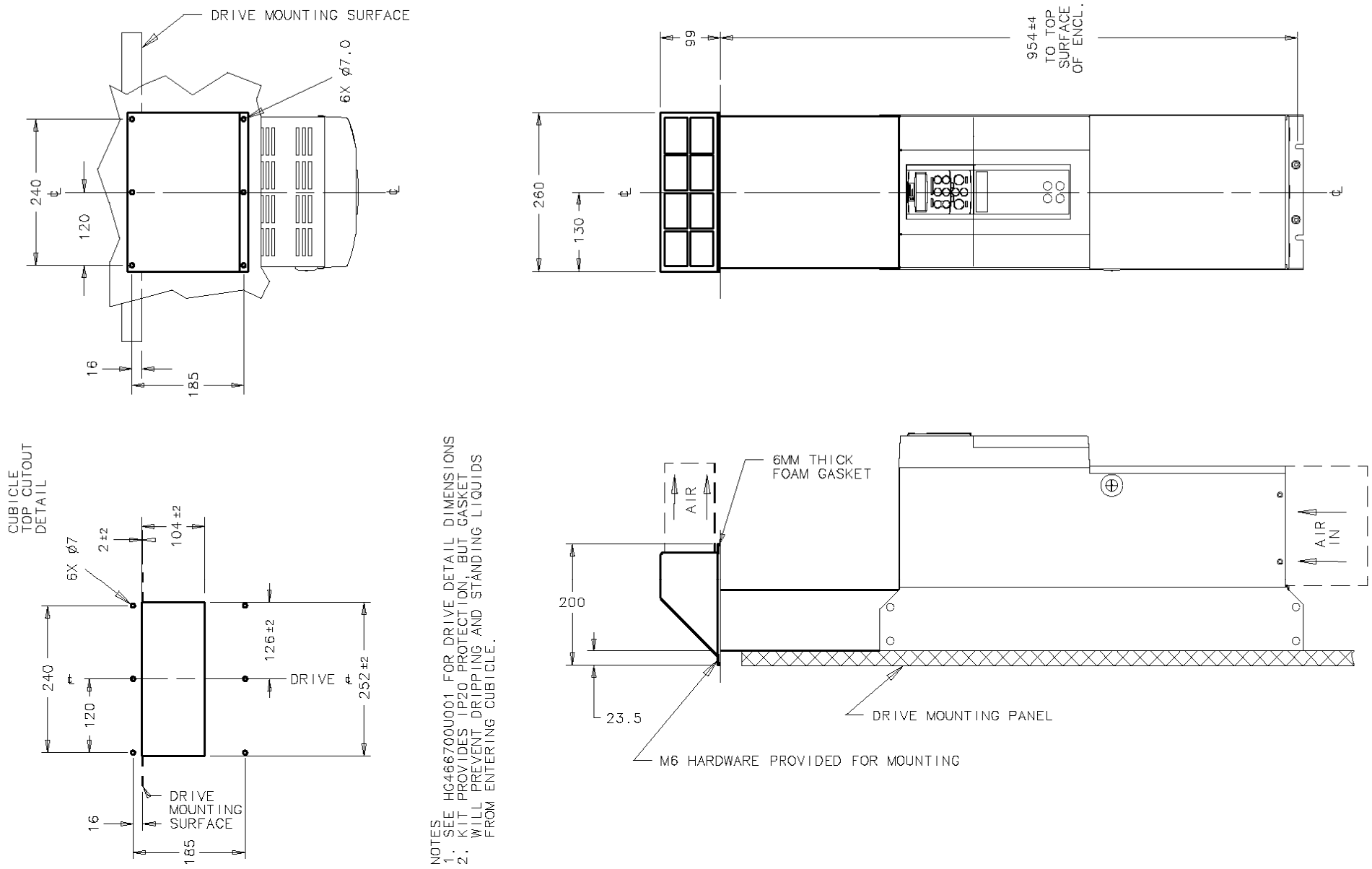

Figure 3- 33 Frame 4 : 380-830A External Vent Kit Installation – Drg No. HG466700U002

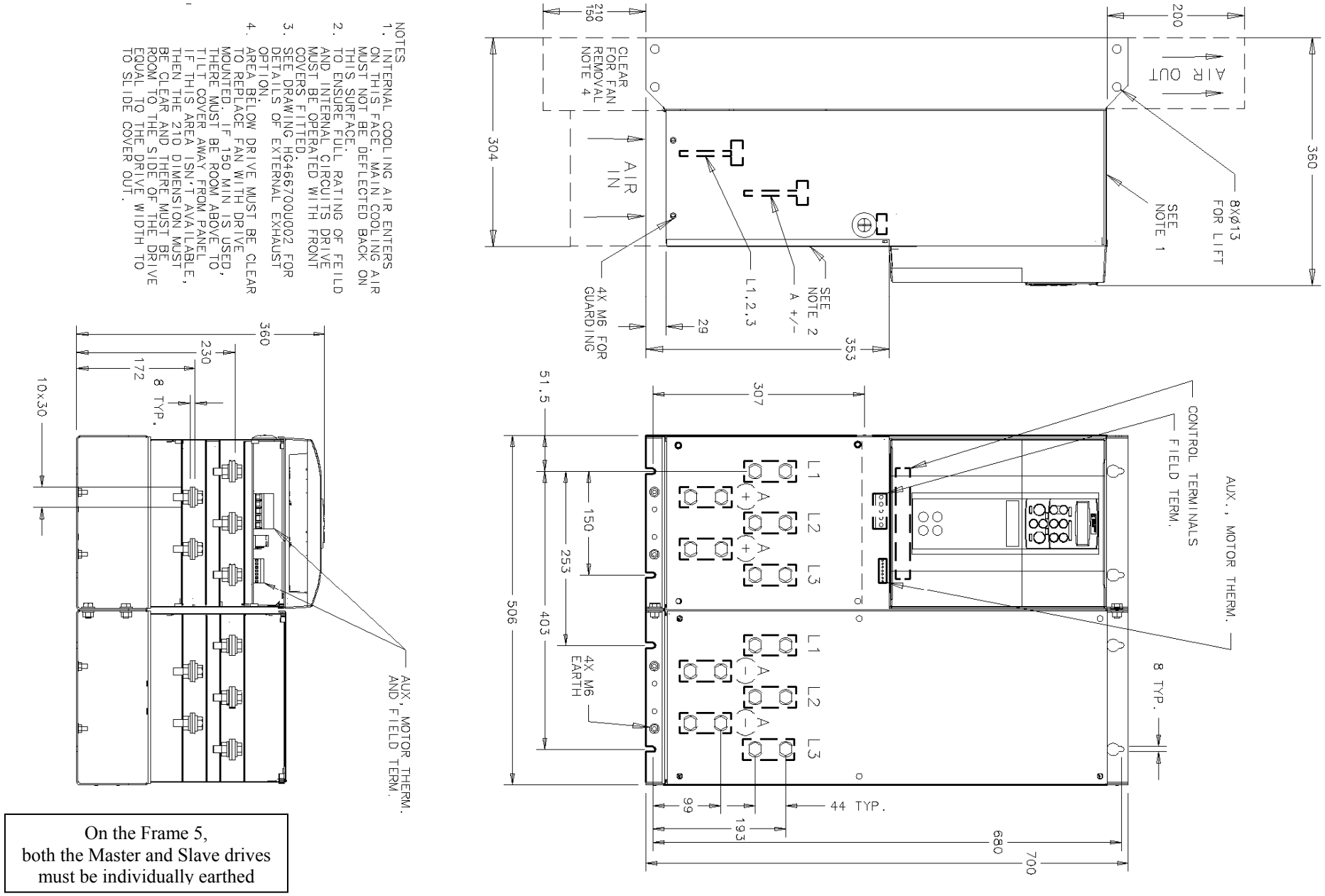

On the Frame 5,
both the Master and Slave drives
must be individually earthed

Figure 3- 34 Frame 5 : 1580A Stack Assembly – Drg No. HG466700U110

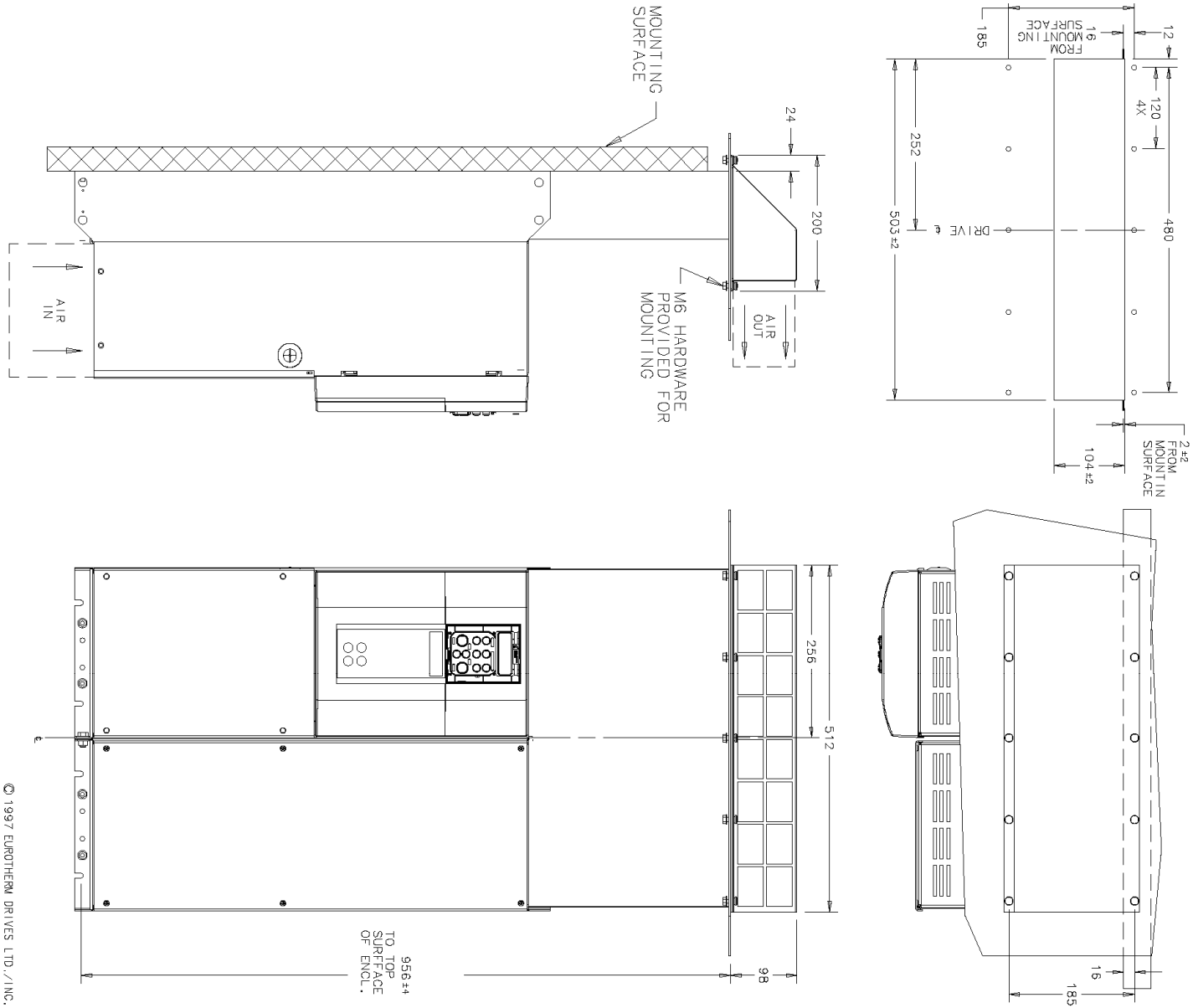

Figure 3- 35 Frame 5 : 1580A External Vent Kit Installation – Drg No. HG466700U111

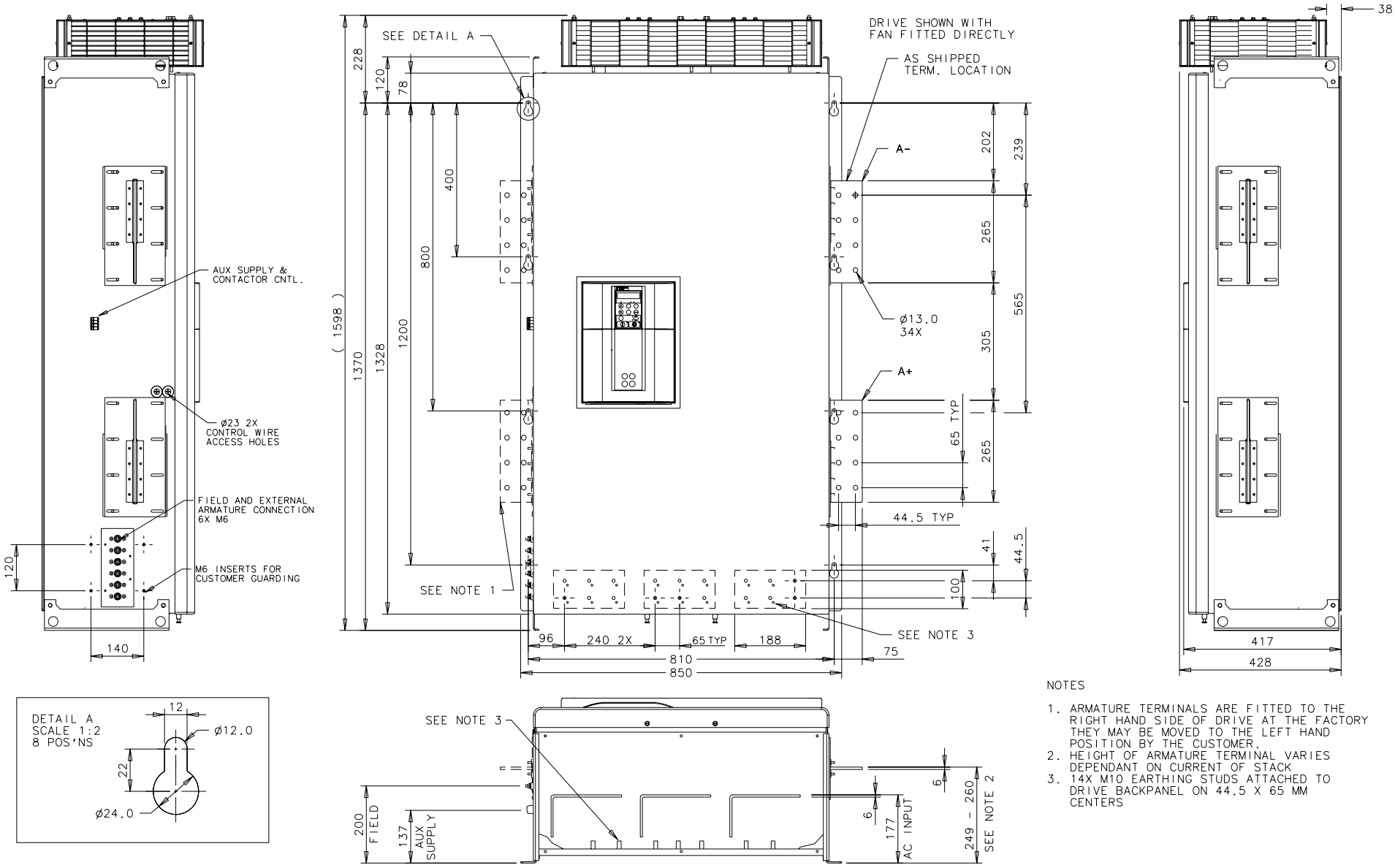

Figure 3- 36 Frame H : 1200A-2700A Stack Assembly (Regenerative) - Drg No. HG466432U000/1

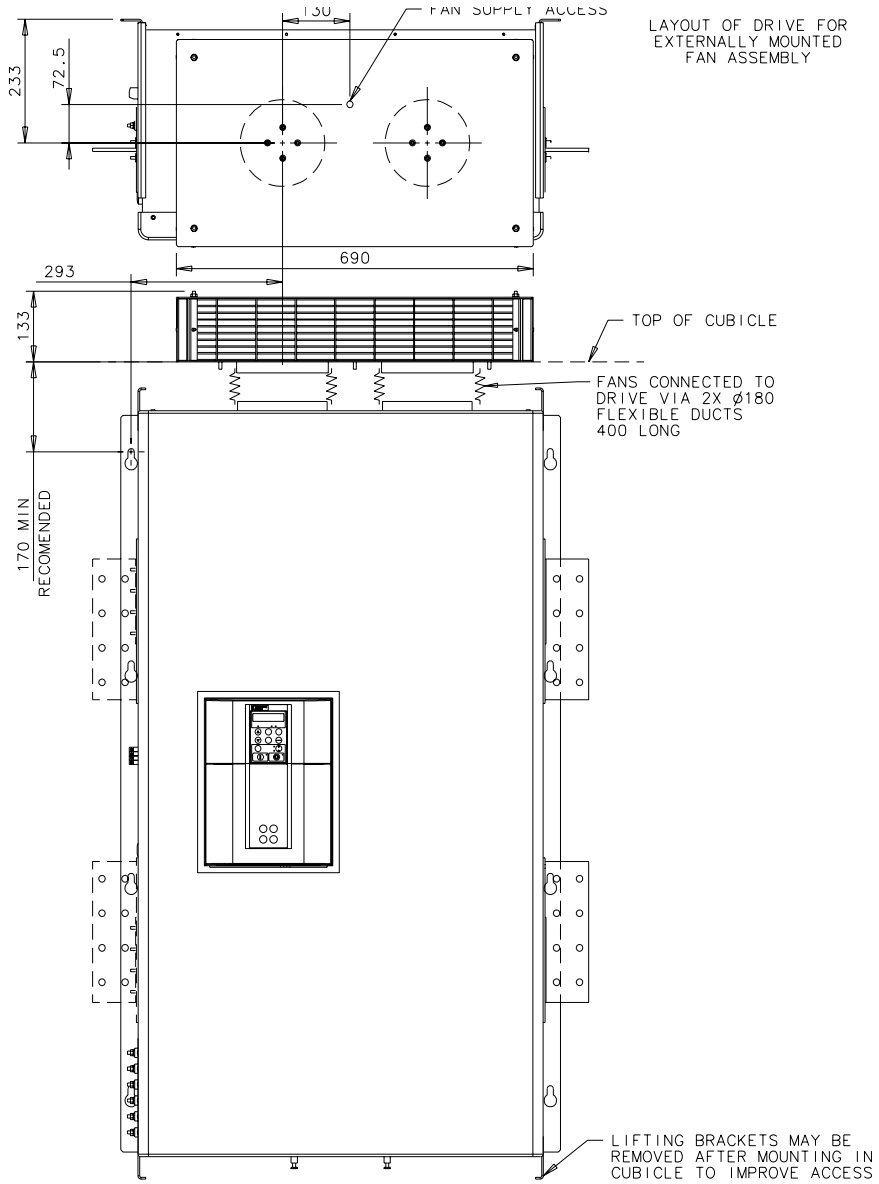

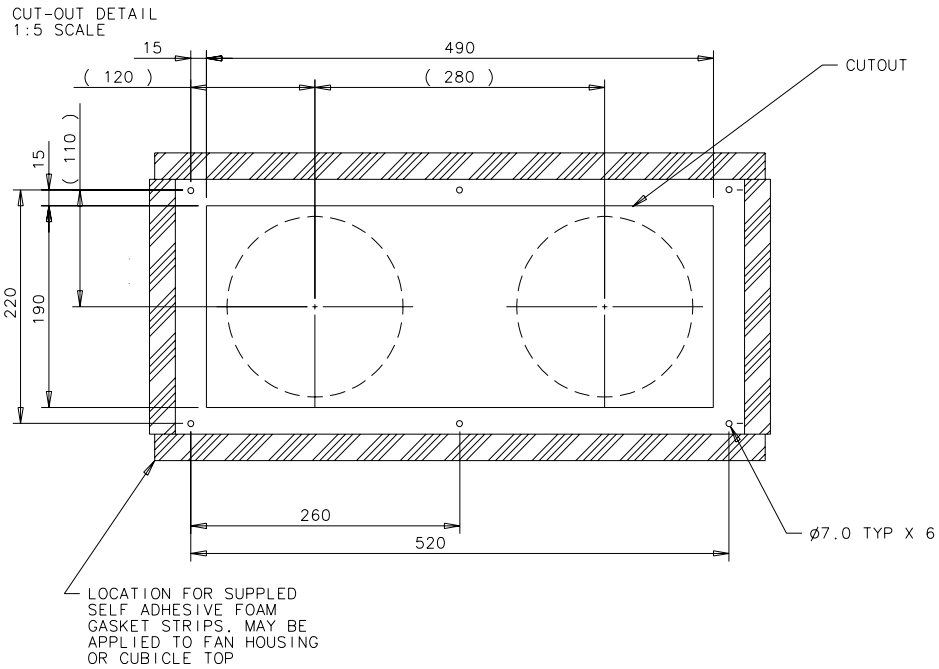

NOTES

10. FANS SHOWN LOCATED DIRECTLY OVER DRIVE OUTLET FLANGES. FAN ASSEMBLY MAY BE OFFSET RELATIVE TO DRIVE AS LONG AS FLEXIBLE HOSE ISN'T COLLAPSED

Figure 3- 37 Frame H : 1200A-2700A Stack Assembly (Regenerative) - Drg No. HG466432U000/2

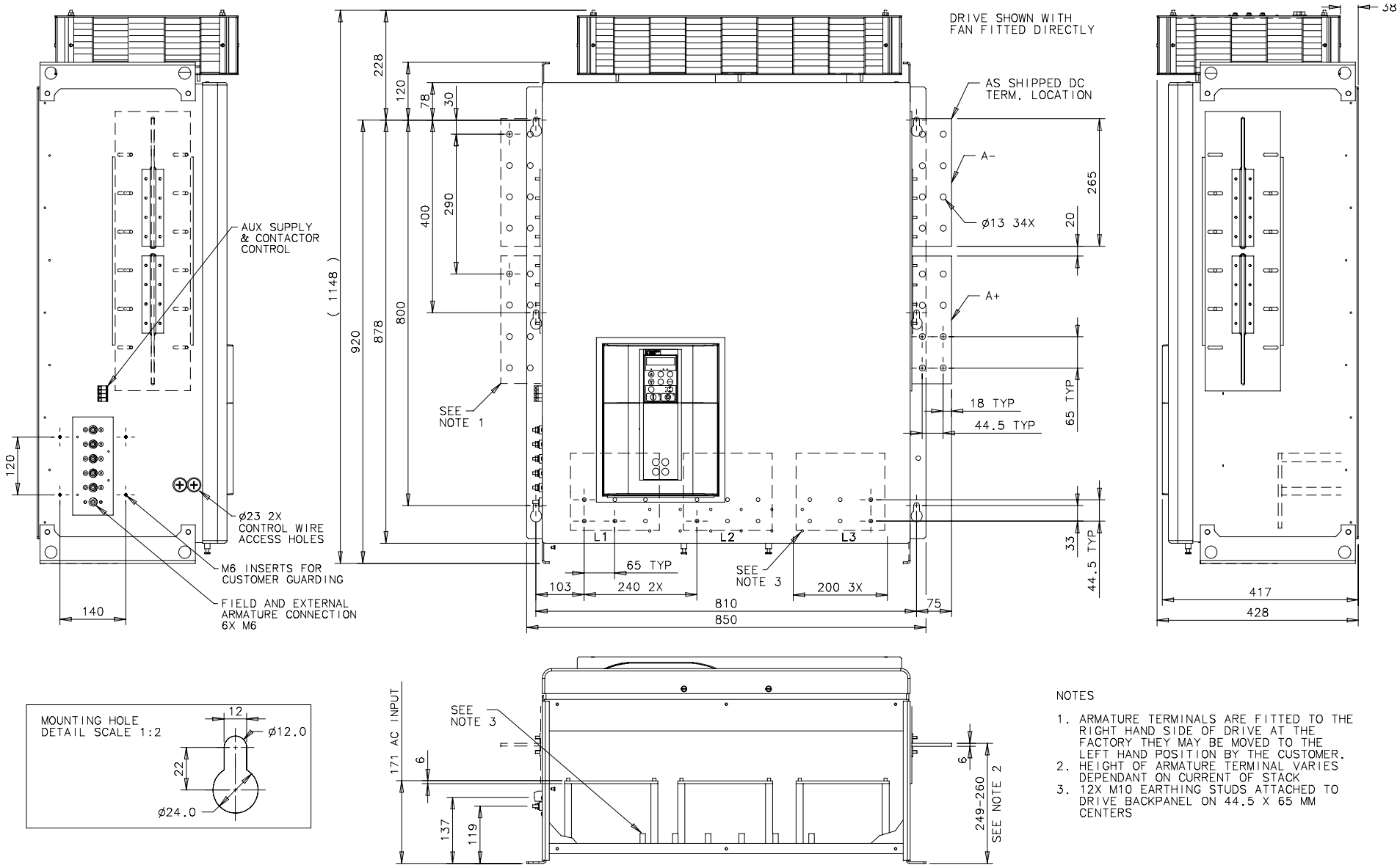

Figure 3- 38 Frame H : 1200A-2700A Stack Assembly (Non-regenerative) - Drg No. HG466433U000/1

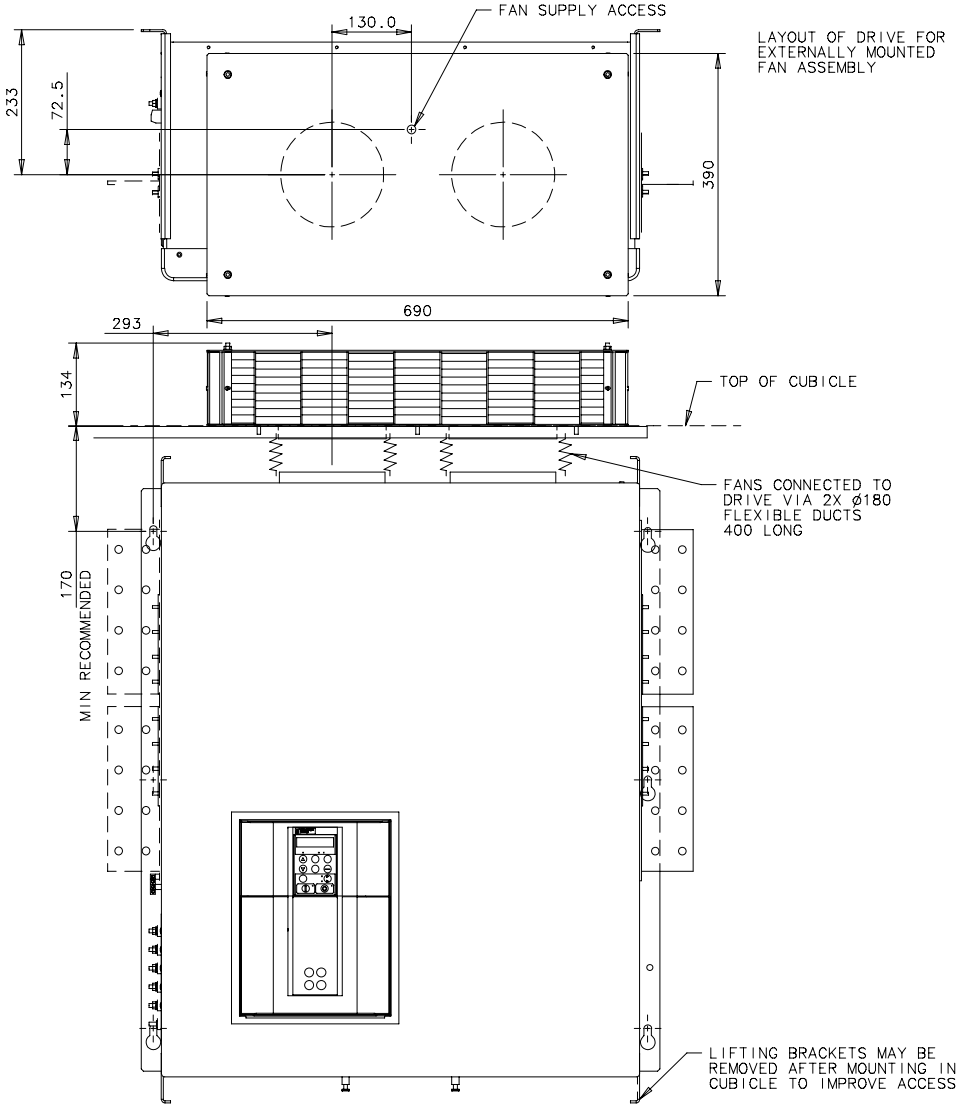

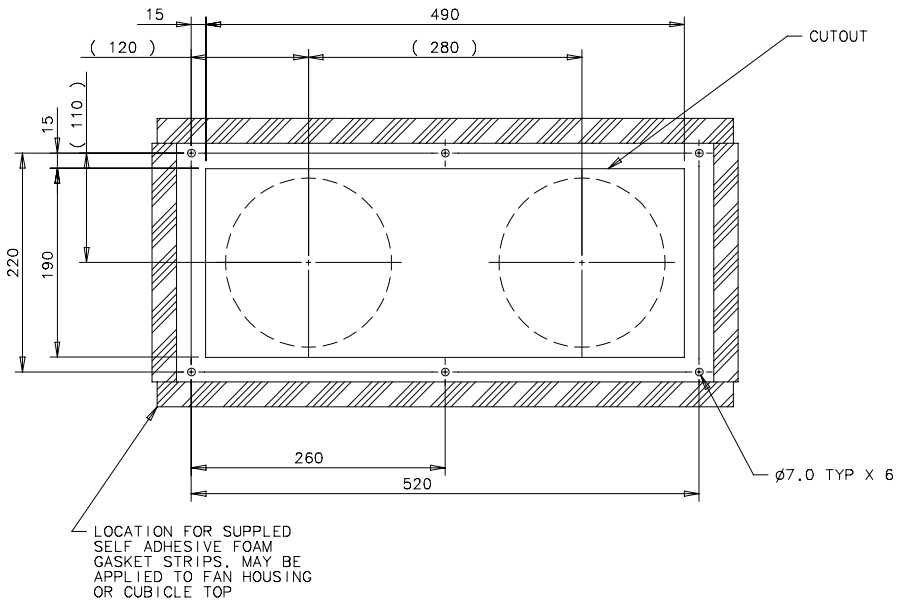

NOTES

10. FANS SHOWN LOCATED DIRECTLY OVER DRIVE OUTLET FLANGES. FAN ASSEMBLY MAY BE OFFSET RELATIVE TO DRIVE AS LONG AS FLEXIBLE HOSE ISN'T COLLAPSED.

Figure 3- 39 Frame H : 1200A-2700A Stack Assembly (Non-regenerative) - Drg No. HG466433U000/2

Filter Installation Drawings

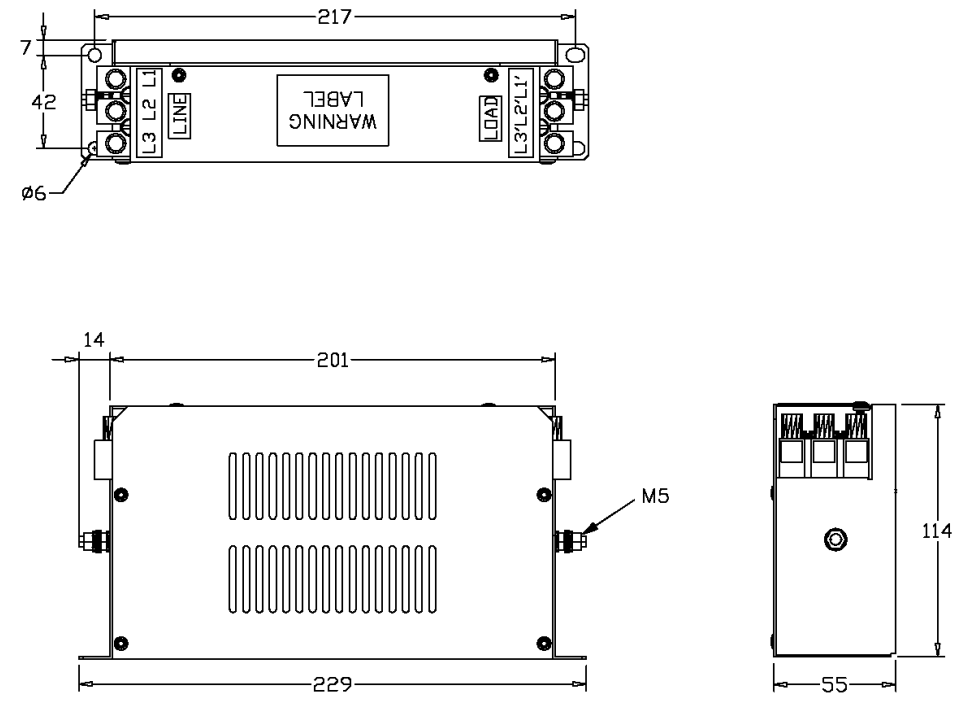

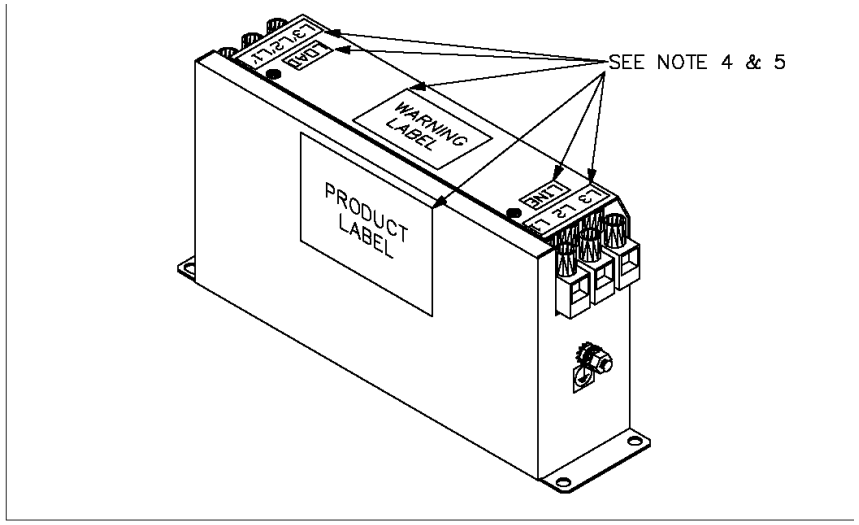

NOTES:
1. TO COMPLY WITH EUROTHERM DRIVES SPECIFICATION HP467323.896.
2. ROXBURGH ELECTRONICS BATCH NO. TO BE ON PRODUCT & PACKAGING LABEL AS MANUFACTURERS BATCH NO.
3. PRODUCT TO BE CE MARKED IN ACCORDANCE WITH EUROPEAN LVD 73/23/EEC.

PACKING SPECIFICATION
1. TO COMPLY WITH EUROTHERM DRIVES SPEC HL388985C
2. UNITS TO BE INDIVIDUALLY PACKED
& TO INCLUDE EMC INSTALLATION GUIDE HA464069C900
3. CLEARLY MARKED WITH:

ROXBURGH EMC Pt No. CO467844U015
RATED INPUT VOLTAGE: 500V AC SUPPLY REFERENCE: TN RATED INPUT CURRENT: 13.5A FREQUENCY: 50/60Hz
MANUFACTURERS BATCH No.
Power Conversion Equipment 55Y4 E142140

PRODUCT LABELS
PRODUCTS TO BE CLEARLY MARKED WITH:–
1. PRODUCT LABEL (SEE BELOW).
2. WARNING LABEL (SEE BELOW).
3. ADDITIONAL SAFETY LABELS AT MANUFACTURERS DISCRETION.
4. TERMINAL IDENTIFICATION LABELS (SEE ABOVE).
5. ORIENTATION & POSITION OF LABELS AS SHOWN ABOVE.

1.

ROXBURGH EMC Pt No. CO467844U015
RATED INPUT VOLTAGE: 500V AC SUPPLY REFERENCE: TN RATED INPUT CURRENT: 13.5A FREQUENCY: 50/60Hz
MANUFACTURERS BATCH No.
Power Conversion Equipment 55Y4 E142140

2.

WARNING
- High Earth Leakage Current - Permanent Earthing Mandatory.
- After supply isolation, wait at least 5 minutes before touching any live parts.
- Use Type B RCD Protection devices only.

ALL DIMENSIONS IN MM / ANGLES IN DECIMAL DEGREES

Figure 3- 40 Filter Mounting Details, Part No. CO467844U015 for Frame 1 : 15 Amp

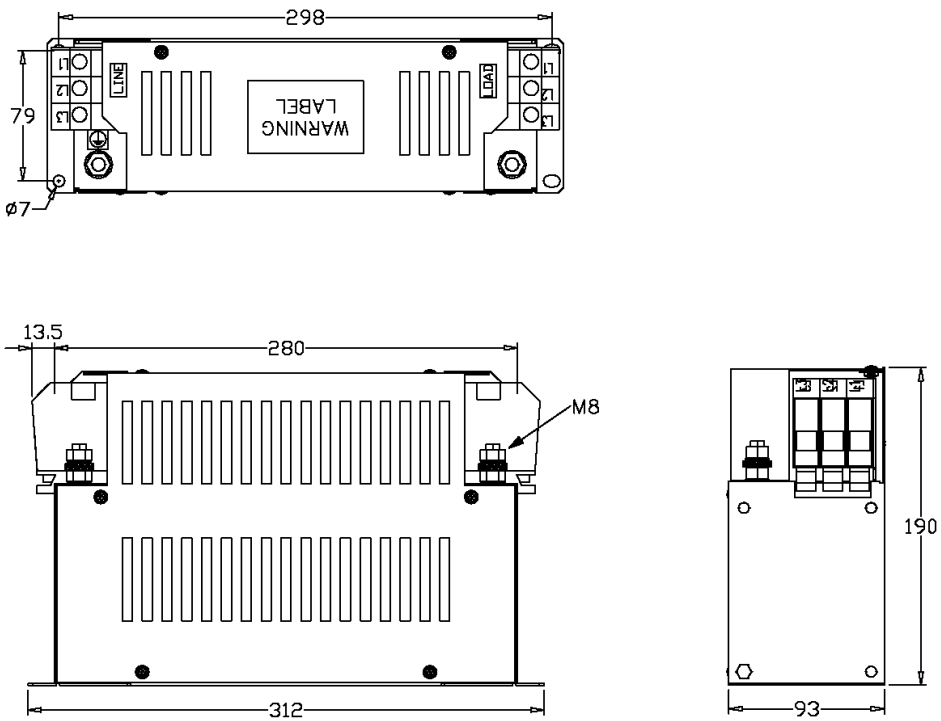

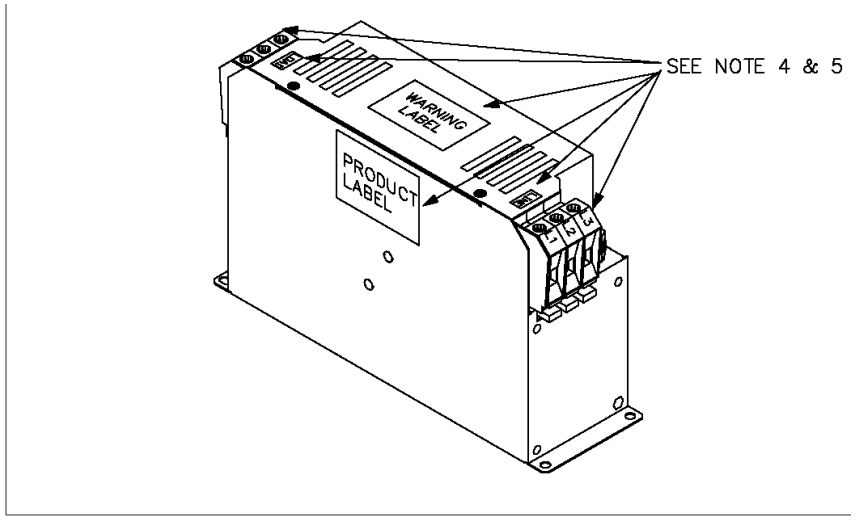

NOTES:
1. TO COMPLY WITH EUROTHERM DRIVES SPECIFICATION HP467323.896.
2. ROXBURGH ELECTRONICS BATCH NO. TO BE ON PRODUCT & PACKAGING LABEL AS MANUFACTURERS BATCH NO.
3. PRODUCT TO BE CE MARKED IN ACCORDANCE WITH EUROPEAN LVD 73/23/EEC.

PACKING SPECIFICATION
1. TO COMPLY WITH EUROTHERM DRIVES SPEC HL388985C
2. UNITS TO BE INDIVIDUALLY PACKED
& TO INCLUDE EMC INSTALLATION GUIDE HA464069C900
3. CLEARLY MARKED WITH:

ROXBURGH EMC Pt No. CO467844U040
RATED INPUT VOLTAGE: 500V AC
SUPPLY REFERENCE: TN
RATED INPUT CURRENT: 36A
FREQUENCY: 50/60Hz
MANUFACTURERS BATCH No.
Power Conversion Equipment 55Y4
E142140

PRODUCT LABELS
PRODUCTS TO BE CLEARLY MARKED WITH:–
1. PRODUCT LABEL (SEE BELOW).
2. WARNING LABEL (SEE BELOW).
3. ADDITIONAL SAFETY LABELS AT MANUFACTURERS DISCRETION.
4. TERMINAL IDENTIFICATION LABELS (SEE ABOVE).
5. ORIENTATION & POSITION OF LABELS AS SHOWN ABOVE.

1. ROXBURGH EMC Pt No. CO467844U040
RATED INPUT VOLTAGE: 500V AC
SUPPLY REFERENCE: TN
RATED INPUT CURRENT: 36A
FREQUENCY: 50/60Hz
MANUFACTURERS BATCH No.
Power Conversion Equipment 55Y4
E142140

2. WARNING
- High Earth Leakage Current - Permanent Earthing Mandatory.
- After supply isolation, wait at least 5 minutes before touching any live parts.
- Use Type B RCD Protection devices only.

ALL DIMENSIONS IN MM / ANGLES IN DECIMAL DEGREES

Figure 3- 41 Filter Mounting Details, Part No. CO467844U040 for Frame 1: 35 & Frame 2 : 40 Amp

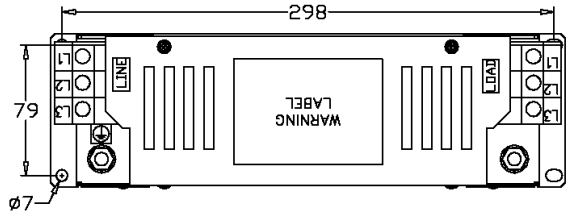

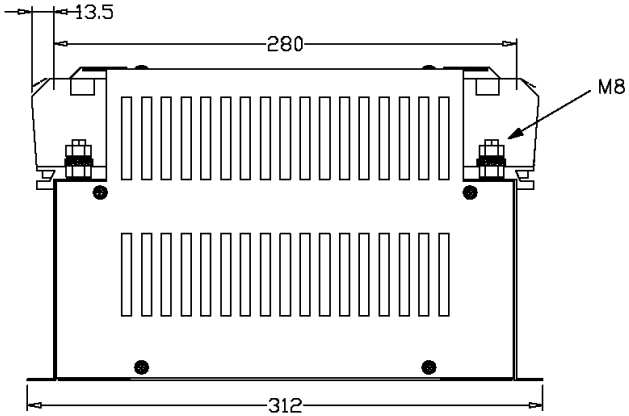

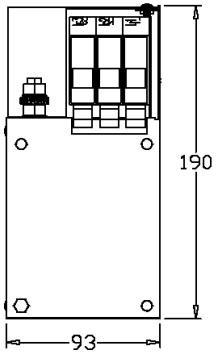

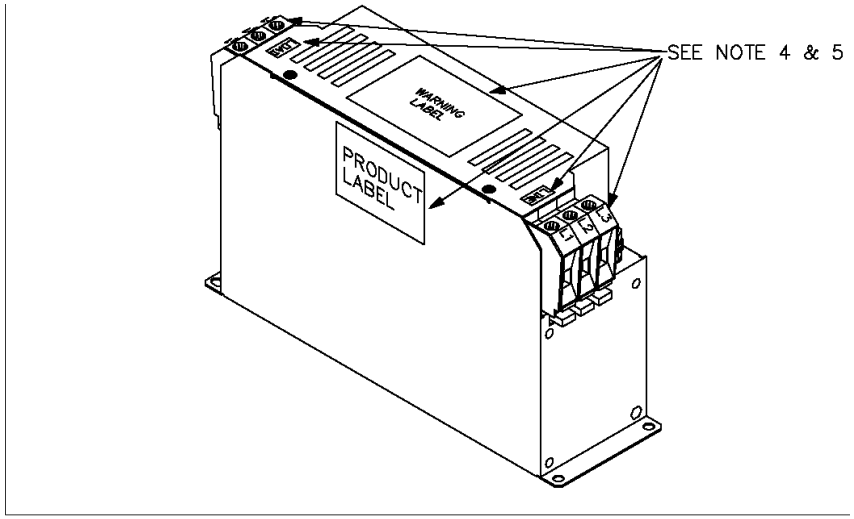

NOTES:
1. TO COMPLY WITH EUROTHERM DRIVES SPECIFICATION HP467323.896.
2. ROXBURGH ELECTRONICS BATCH NO. TO BE ON PRODUCT & PACKAGING LABEL AS MANUFACTURERS BATCH NO.
3. PRODUCT TO BE CE MARKED IN ACCORDANCE WITH EUROPEAN LVD 73/23/EEC.

PACKING SPECIFICATION
1. TO COMPLY WITH EUROTHERM DRIVES SPEC HL388985C
2. UNITS TO BE INDIVIDUALLY PACKED
& TO INCLUDE EMC INSTALLATION GUIDE HA464069C900
3. CLEARLY MARKED WITH:

ROXBURGH EMC Pt No. CO467844U070
RATED INPUT VOLTAGE: 500V AC SUPPLY REFERENCE: TN RATED INPUT CURRENT: 63A FREQUENCY: 50/60Hz
MANUFACTURERS BATCH No.
Power Conversion Equipment 55Y4 E142140

PRODUCT LABELS
PRODUCTS TO BE CLEARLY MARKED WITH:–
1. PRODUCT LABEL (SEE BELOW).
2. WARNING LABEL (SEE BELOW).
3. ADDITIONAL SAFETY LABELS AT MANUFACTURERS DISCRETION.
4. TERMINAL IDENTIFICATION LABELS (SEE ABOVE).
5. ORIENTATION & POSITION OF LABELS AS SHOWN ABOVE.

1.

ROXBURGH EMC Pt No. CO467844U070
RATED INPUT VOLTAGE: 500V AC SUPPLY REFERENCE: TN RATED INPUT CURRENT: 63A FREQUENCY: 50/60Hz
MANUFACTURERS BATCH No.
Power Conversion Equipment 55Y4 E142140

2.

WARNING
- High Earth Leakage Current – Permanent Earthing Mandatory.
- After supply isolation, wait at least 5 minutes before touching any live parts.
- Use Type B RCD Protection devices only.

ALL DIMENSIONS IN MM / ANGLES IN DECIMAL DEGREES

Figure 3- 42 Filter Mounting Details, Part No. CO467844U070 for Frame 2 : 70 Amp

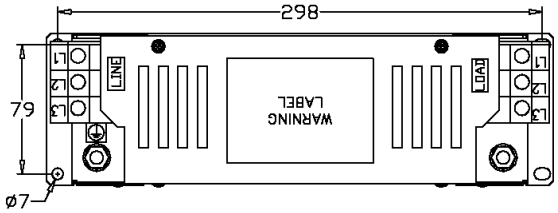

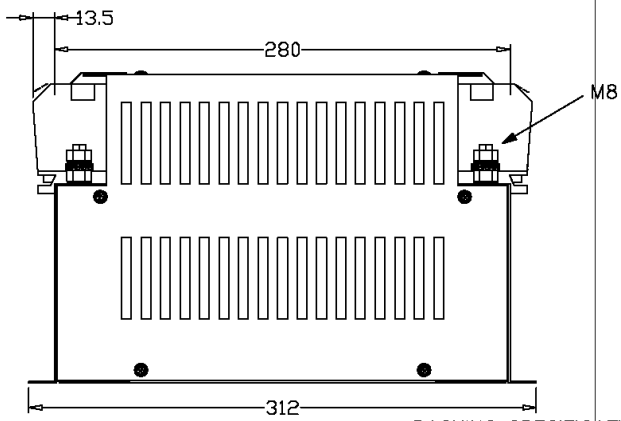

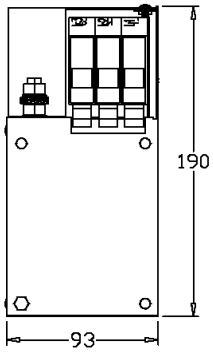

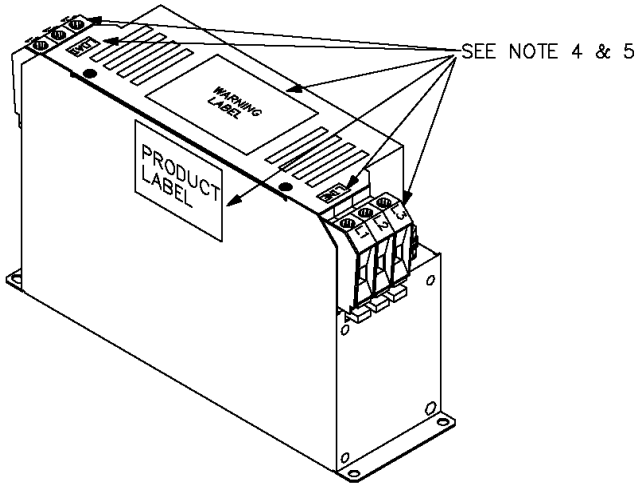

NOTES:
1. TO COMPLY WITH EUROTHERM DRIVES SPECIFICATION HP467323.896.
2. ROXBURGH ELECTRONICS BATCH NO. TO BE ON PRODUCT & PACKAGING LABEL AS MANUFACTURERS BATCH NO.
3. PRODUCT TO BE CE MARKED IN ACCORDANCE WITH EUROPEAN LVD 73/23/EEC.

PACKING SPECIFICATION
1. TO COMPLY WITH EUROTHERM DRIVES SPEC HL388985C
2. UNITS TO BE INDIVIDUALLY PACKED
& TO INCLUDE EMC INSTALLATION GUIDE HA464069C900
3. CLEARLY MARKED WITH:

ROXBURGH EMC Pt No. CO467844U110
RATED INPUT VOLTAGE: 500V AC SUPPLY REFERENCE: TN RATED INPUT CURRENT: 99A FREQUENCY: 50/60Hz
MANUFACTURERS BATCH No.
Power Conversion Equipment 55Y4 E142140

PRODUCT LABELS
PRODUCTS TO BE CLEARLY MARKED WITH:–
1. PRODUCT LABEL. (SEE BELOW).
2. WARNING LABEL (SEE BELOW).
3. ADDITIONAL SAFETY LABELS AT MANUFACTURERS DISCRETION.
4. TERMINAL IDENTIFICATION LABELS (SEE ABOVE).
5. ORIENTATION & POSITION OF LABELS AS SHOWN ABOVE.

1.

ROXBURGH EMC Pt No. CO467844U110
RATED INPUT VOLTAGE: 500V AC SUPPLY REFERENCE: TN RATED INPUT CURRENT: 99A FREQUENCY: 50/60Hz
MANUFACTURERS BATCH No.
Power Conversion Equipment 55Y4 E142140

2.

WARNING
- High Earth Leakage Current - Permanent Earthing Mandatory.
- After supply isolation, wait at least 5 minutes before touching any live parts.
- Use Type B RCD Protection devices only.

ALL DIMENSIONS IN MM / ANGLES IN DECIMAL DEGREES

Figure 3- 43 Filter Mounting Details, Part No. CO467844U110 for 590+ Frame 2 : 110 Amp

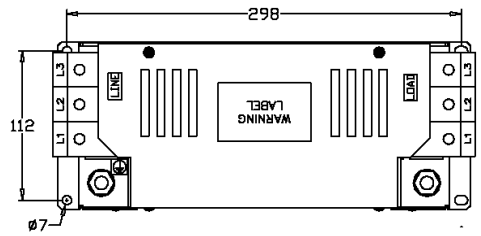

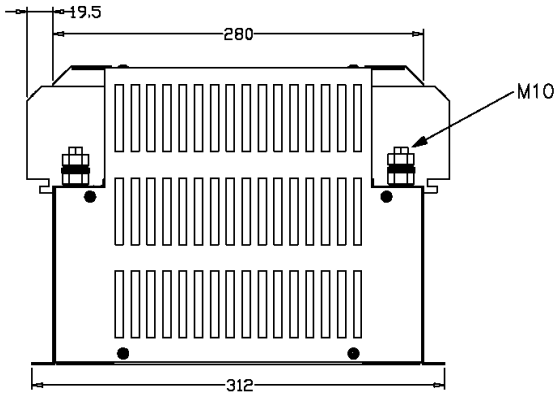

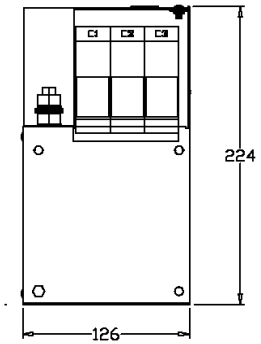

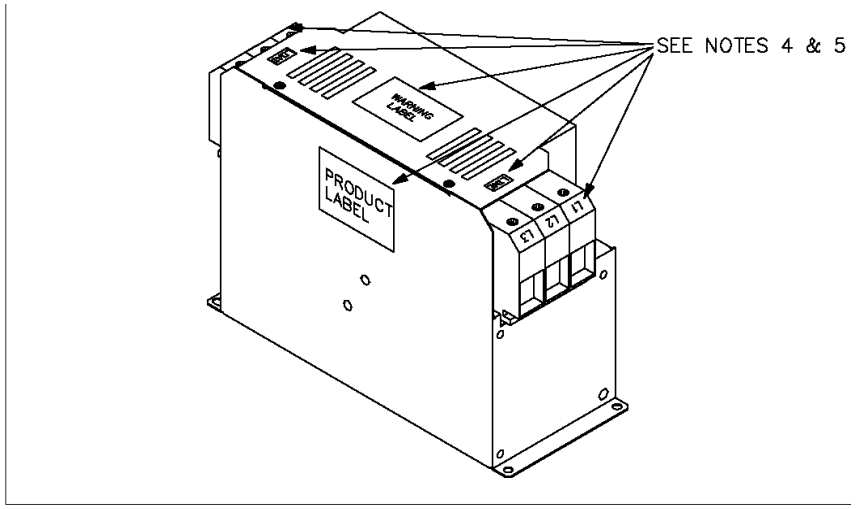

NOTES:
1. TO COMPLY WITH EUROTHERM DRIVES SPECIFICATION HP467323.896.
2. ROXBURGH ELECTRONICS BATCH NO. TO BE ON PRODUCT & PACKAGING LABEL AS MANUFACTURERS BATCH NO.
3. PRODUCT TO BE CE MARKED IN ACCORDANCE WITH EUROPEAN LVD 73/23/EEC.

PACKING SPECIFICATION
1. TO COMPLY WITH EUROTHERM DRIVES SPEC HL388985C
2. UNITS TO BE INDIVIDUALLY PACKED
& TO INCLUDE EMC INSTALLATION GUIDE HA464069C900
3. CLEARLY MARKED WITH:

ROXBURGH EMC Pt No. CO467844U165
RATED INPUT VOLTAGE: 500V AC SUPPLY REFERENCE: TN RATED INPUT CURRENT: 148.5A FREQUENCY: 50/60Hz
MANUFACTURERS BATCH No.
Power Conversion Equipment 55Y4 E142140

PRODUCT LABELS
PRODUCTS TO BE CLEARLY MARKED WITH:–
1. PRODUCT LABEL (SEE BELOW).
2. WARNING LABEL (SEE BELOW).
3. ADDITIONAL SAFETY LABELS AT MANUFACTURERS DISCRETION.
4. TERMINAL IDENTIFICATION LABELS (SEE ABOVE).
5. ORIENTATION & POSITION OF LABELS AS SHOWN ABOVE.

1.

ROXBURGH EMC Pt No. CO467844U165
RATED INPUT VOLTAGE: 500V AC SUPPLY REFERENCE: TN RATED INPUT CURRENT: 148.5A FREQUENCY: 50/60Hz
MANUFACTURERS BATCH No.
Power Conversion Equipment 55Y4 E142140

2.

WARNING
- High Earth Leakage Current – Permanent Earthing Mandatory.
- After supply isolation, wait at least 5 minutes before touching any live parts.
- Use Type B RCD Protection devices only.

ALL DIMENSIONS IN MM / ANGLES IN DECIMAL DEGREES

Figure 3- 44 Filter Mounting Details, Part No. CO467844U165 for Frame 2 : 165 Amp

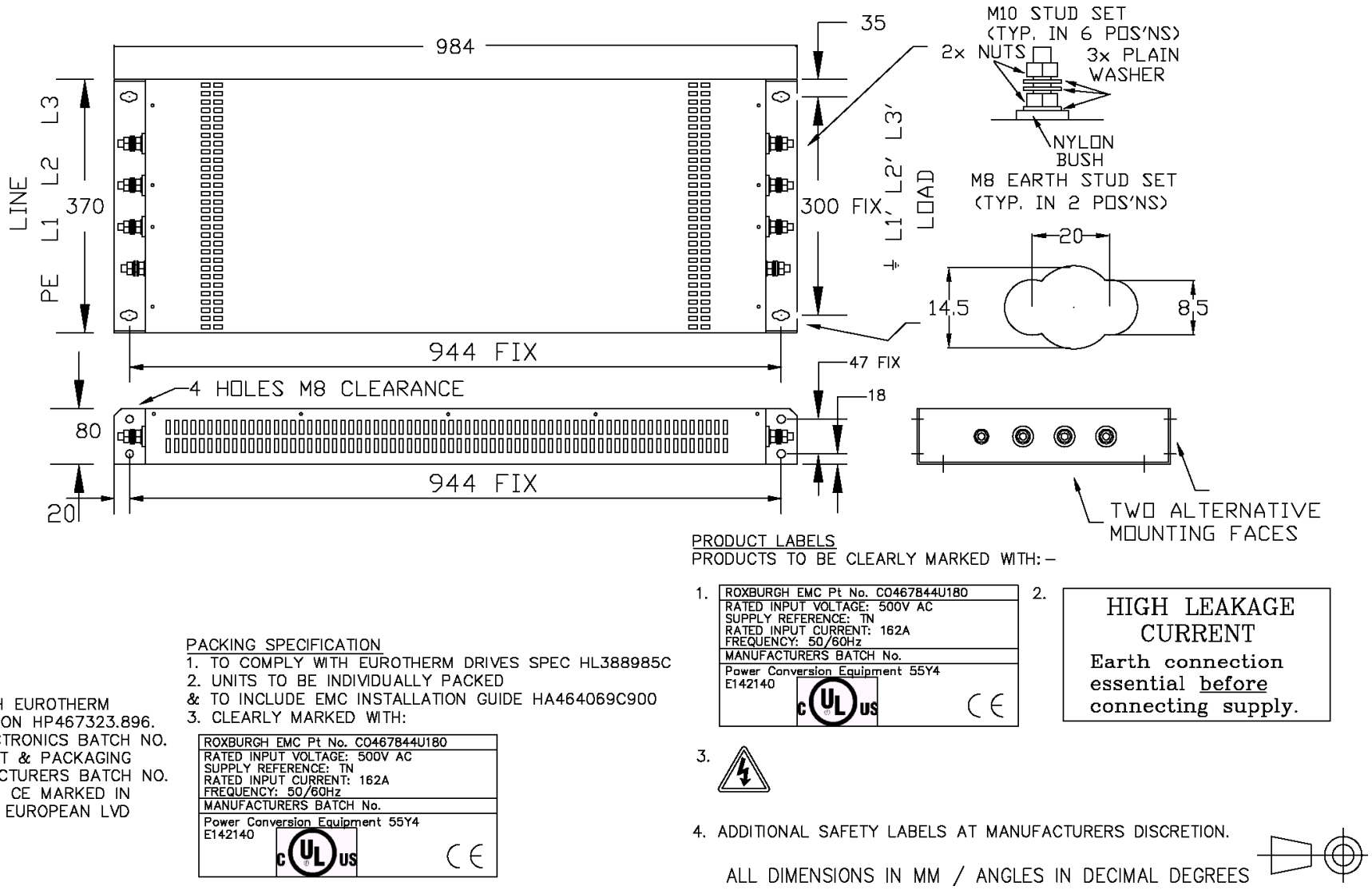

Figure 3- 45 Filter Mounting Details, Part No. CO467844U180 for Frame 3 : 180 Amp

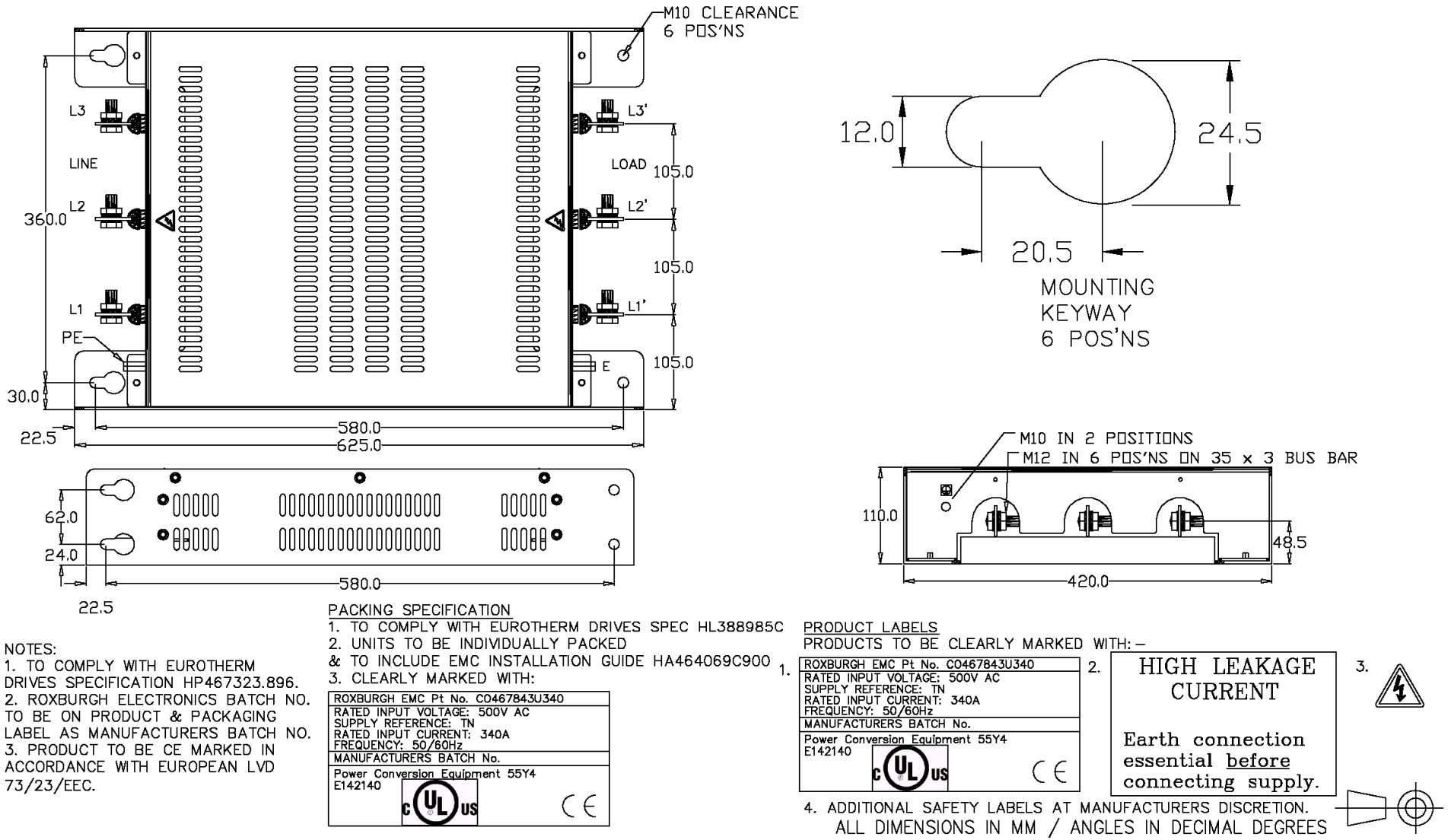

Figure 3- 46 Filter Mounting Details, Part No. CO467843U340
Frame 3 : 270 Amp (1 filter) and Frame 4 : 380-830 Amp (2 filter)
(refer to Appendix E: "Technical Specifications" - External AC Supply (RFI) Filters)

Line Choke Installation Drawings

IMPORTANT ***Always use the specified ac line choke with the Drive.***

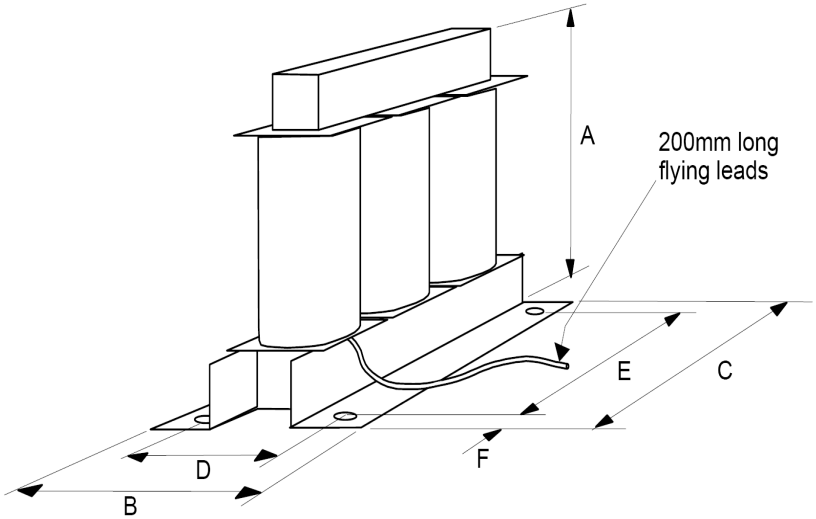

Parker Part Number	Drive Rating	Weight	Dimensions (mm)						Mtg Hole	Terminal
		(kg)	A	B	C	D	E	F	Ø	Ø
For use without EMC Filters										
Frame 1										
CO466448U015	15A	1	67	60	80	40	64	8	7	M8
CO466448U040	35A	2.5	127	70	155	48	140	7.5	7	M8
Frame 2										
CO466448U040	40A	2.5	127	70	155	48	140	7.5	7	M8
CO466448U070	70A	4.5	127	85	155	63	140	7.5	7	M8
CO466448U110	110A	7.5	160	100	190	75	170	10	9	M8
CO466448U165	165A	7.5	160	102	190	76	170	10	9	M8
For use with EMC filters										
Frame 1										
CO466449U015	15A	4.5	127	90	155	68	140	7.5	7	M8
CO466449U040	35A	8	160	100	190	75	170	10	9	M8
Frame 2										
CO466449U040	40A	8	160	100	190	75	170	10	9	M8
CO466449U070	70A	10	160	105	190	83	170	10	9	M8
CO466449U110	110A	14	160	125	190	103	170	10	9	M8
CO466449U165	165A	28	225	200	240	176	150	45	15	M8

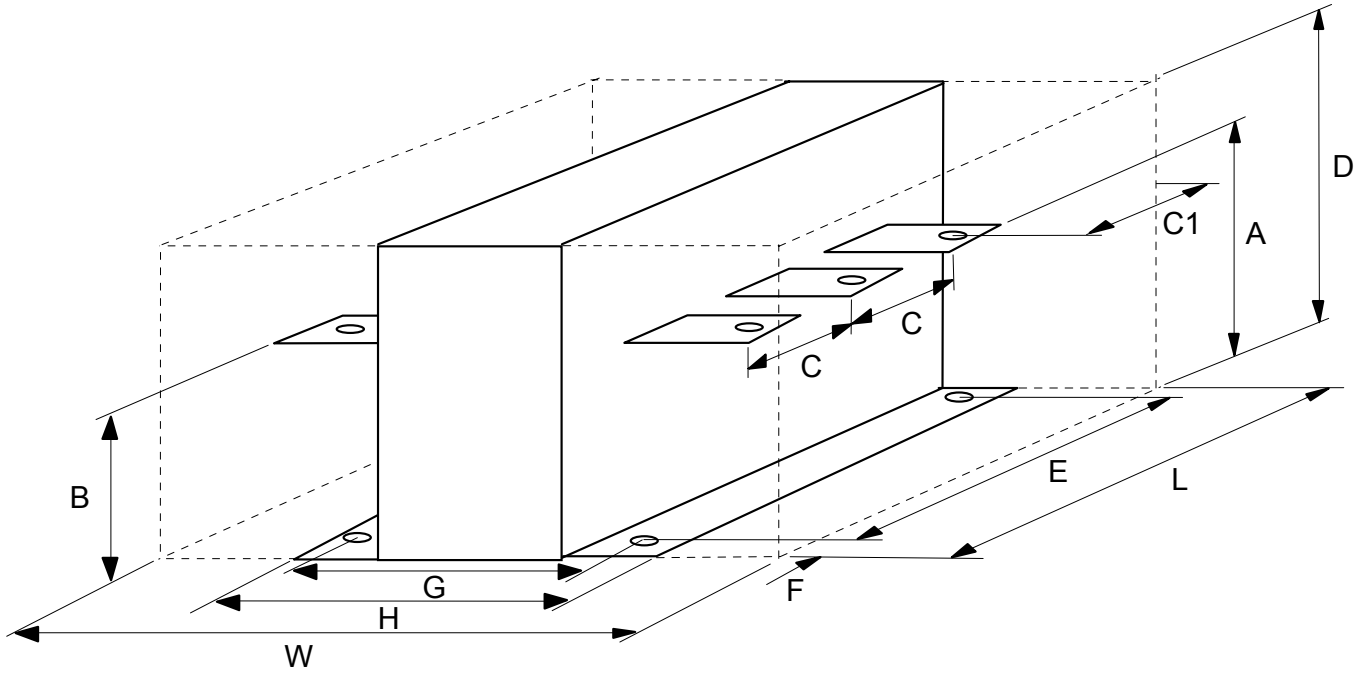

Parker Part Number	Drive Rating	Weight	Dimensions (mm)											Mtg Hole	Terminal
		(kg)	A	B	C	C1	D	E	F	G	H	L	W	∅	∅
For use without EMC Filters															
Frame 3															
CO057960	270A	30	110	110	80	60	255	200	40	170	200	280	380	∅13	M8

Line Choke (Frames 4, 5, 6 & H)

Contact Parker SSD Drives about suitable chokes for the above frame sizes.
Also refer to Appendix E: "Technical Specifications" - AC Line Choke (Frame H).

Chapter 4

Operating the Drive

Learn how to turn the motor for the first time, and about the various ways you can start and stop the drive. This chapter also offers some application advice.

Pre-Operation Checks 4-1
Control Philosophy 4-2
Start/Stop and Speed Control 4-2
Selecting Local or Remote Control 4-3
Reading the Status LEDs 4-4
Setting-up the Drive 4-5
Calibrating the Control Board 4-5
Selecting Speed Feedback 4-7
Speed Feedback Option Boards 4-7
Initial Start-Up Routine 4-9
Performance Adjustment 4-16
Current Loop - The ARMATURE Autotune Feature 4-16
Speed Loop Adjustment 4-17
Starting and Stopping Methods 4-19
Stopping Methods 4-19
Normal Stop (C3) 4-19
Program Stop (B8) 4-22
Coast Stop (B9) 4-24
Standstill 4-24
The Trip Condition 4-24
Normal Starting Method 4-24
Advanced Starting Methods 4-25
Starting Several Drives Simultaneously 4-25
Jog 4-25
Crawl 4-25
Take Up Slack 4-26

Pre-Operation Checks

Initial checks before applying power:

- Mains power supply voltage is correct.
- Auxiliary power supply voltage is correct.
- Motor is of correct armature voltage and current rating.
- Check all external wiring circuits - power, control, motor and earth connections.

NOTE **Completely disconnect the drive before point-to-point checking with a buzzer, or when checking insulation with a Megger.**

- Check for damage to equipment.
- Check for loose ends, clippings, drilling swarf etc. lodged in the Drive and system.
- If possible check that the motor can be turned freely, and that any cooling fans are intact and free from obstruction.

Ensure the safety of the complete system before the drive is energised:

- Ensure that rotation of the motor in either direction will not cause damage.
- Ensure that nobody else is working on another part of the system which will be affected by powering up.
- Ensure that other equipment will not be adversely affected by powering up.

Prepare to energise the drive and system as follows:

- Remove the main external HRC fuses to prevent the main 3-phase and single phase auxiliary supply from being connected.
- Disconnect the load from the motor shaft, if possible.
- If any of the Drive's control terminals are not being used, check whether these unused terminals need to be tied high or low. Refer to Appendix E: "Technical Specifications"- Terminal Information - Control Board.
- If there is any doubt about the integrity of a particular installation, insert a high wattage resistor, i.e. fire elements, in series with the motor armature.
- Check external run contacts are open.
- Check external speed setpoints are all zero.

Control Philosophy

There are four ways to control the Drive using Remote and Local control:

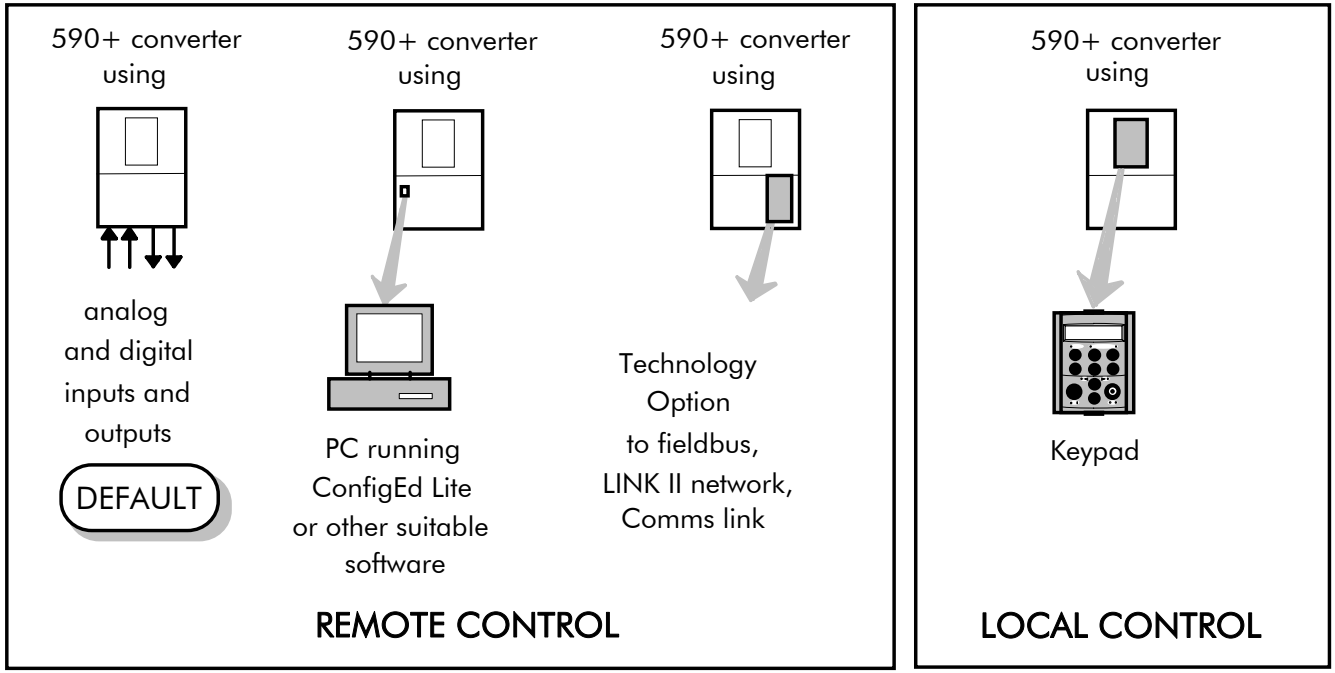

Figure 4-1 Remote and Local Control Modes

Start/Stop and Speed Control

There are two forms of control in operation at any time: *Start/Stop* and *Speed Control*. Each can be individually selected to be under either Local or Remote Control.

- **Local or Remote Start/Stop** decides how you will start and stop the Drive.
- **Local or Remote Speed Control** determines how you will control the motor speed.

In each case, Local and Remote control are offered by using the following:

Local: The Keypad

Remote: Analog and digital inputs and outputs, System Port P3 or the Technology Option

Thus the Drive can operate in two modes:

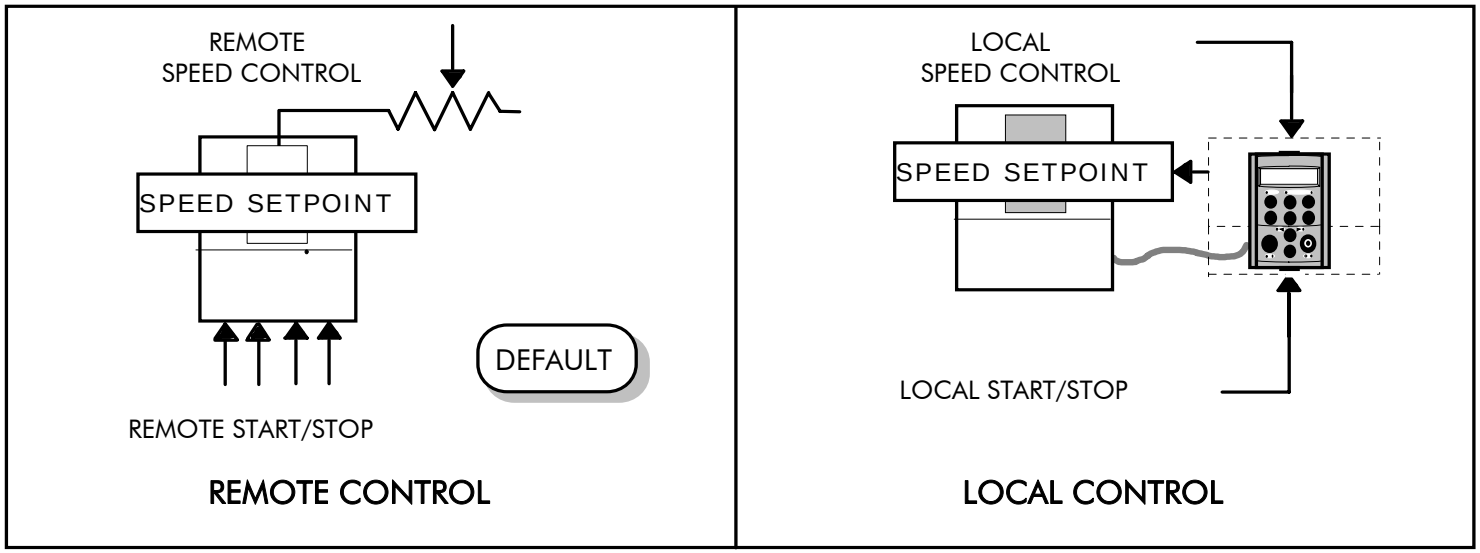

Figure 4-2 Local and Remote Control

NOTE **Start/Stop is also known as "Sequencing".**
Speed Control is also known as "Reference Generation".

Selecting Local or Remote Control

DEFAULT

*The default is for the **L/R** key to be set for Remote control, i.e. both the SEQ and REF LEDs will be off.*

If the default Remote Start/Stop and Speed Control is not suitable for your application, follow the instructions below using the Keypad or a suitable PC programming tool to select Local Start/Stop and Speed Control.

NOTE **You can only change between Local and Remote control when the Drive is "stopped".**

The **L/R** key on the Keypad toggles between **Local** and **Remote** control, changing both Start/Stop and Speed Control modes at the same time.

LED Indications

The mode of control is indicated by the "LOCAL" LEDs on the Keypad:

SEQ = Start/Stop
REF = Speed Control

If the LED is illuminated (●), then LOCAL mode is in force.

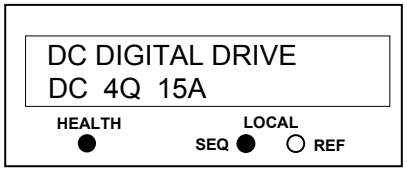

Figure 4-3 Control Mode LED Indications

Operation in Local Mode

The drive requires the following power terminals to be connected for operation in Local control.

3-phase supply via contactor
Auxiliary supply
3-phase contactor coil
Motor thermistor TH1 & TH2
Motor armature
Motor field

The drive requires the following control terminals to be active for operation in Local control.

Current Limit (jumper A6 to B3)
Program Stop - high (jumper B8 to C9)
Coast Stop - high (jumper B9 to C9)
External Trip - low (jumper C1 to C2)
External Enable - high (jumper C5 to C9)

To run in Local control:

Press the L/R key to enable Local control as detailed above
On the Keypad press the RUN key to start the unit
Use the UP and DOWN keys to control the speed
On the Keypad press the STOP key to stop the unit

Reading the Status LEDs

These LEDs are used when the blanking cover is fitted to the drive instead of the Keypad.

OFF
SHORT FLASH
EQUALFLASH
LONG FLASH
ON

HEALTH	RUN	Drive State
		Re-Configuration, or corrupted non-volatile memory at power-up
		Tripped
		Auto Restarting
		Stopped
		Running with zero reference
		Running
		Stopping

Table 4-1 Status indications given by the Health and Run LEDs

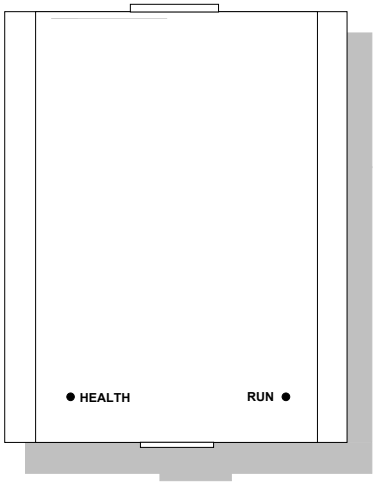

Figure 4-4 Blank Cover showing LEDs

Setting-up the Drive

IMPORTANT ***You must not exceed the maximum drive and motor ratings. Refer to the Product Code or maximum rating label, and the motor rating plate.***

The following start-up routine assumes that the Keypad is connected and is in default mode, and that the Drive's control terminals are wired as shown in the Minimum Connection diagrams in Chapter 3.

The following instructions are written in logical order. Complete each stage successfully before progressing to the next.

Calibrating the Control Board

AUXILIARY POWER ONLY IS CONNECTED AT THIS STAGE

You must first calibrate the Drive for use with the motor.

Connect the auxiliary power supply to auxiliary supply terminals L & N (Frame 3: Terminals L & N = D8 & D7), but do not connect the main 3-phase power supply at this stage. Check that the correct voltage appears between these terminals.

The Keypad will now display the Welcome screen, and the Health and Forward LEDs will be illuminated (assuming that the Drive's control terminals are wired as shown in Figure 3-4, Minimum Connection Requirements).

NOTE **The CONFIGURE DRIVE menu at the top of the menu tree contains many of the important parameters used during set-up.**

Refer to Chapter 6: "The Keypad" to familiarise yourself with the keypad's LED indications, and how to use the keys and menu structure.

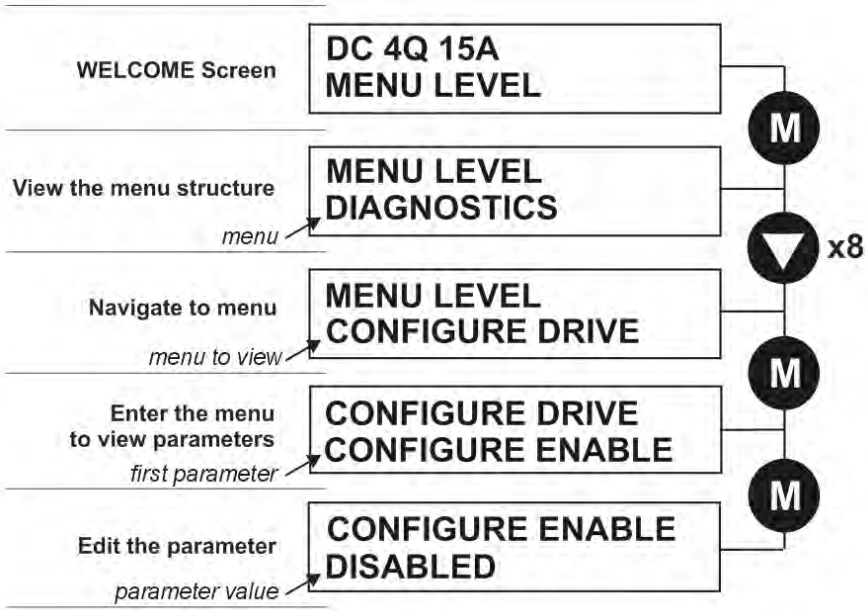

MMI Menu Map

1 CONFIGURE DRIVE
- CONFIGURE ENABLE
- NOM MOTOR VOLTS
- ARMATURE CURRENT
- FIELD CURRENT
- FLD. CTRL MODE
- FLD. VOLTS RATIO
- MAIN CURR. LIMIT
- AUTOTUNE
- SPEED FBK SELECT
- ENCODER LINES
- ENCODER RPM
- ENCODER SIGN
- SPD. INT. TIME
- SPD. PROP. GAIN

Set the following parameters:

CONFIGURE ENABLE

Set to TRUE. This allows you to change parameter values, but the drive cannot run.

NOM MOTOR VOLTS – Armature Voltage (VACAL)

If the drive is designed for use on a nominal 3-phase power supply of 500, 600 or 690V, set the Armature Voltage value in the NOM MOTOR VOLTS parameter.

OR

If the drive is designed for use on a nominal 3-phase power supply of 220V, set DOUBLE the Armature Voltage value in the NOM MOTOR VOLTS parameter.

NOTE **Refer to the Product Code on the drive's Rating Label to confirm the drive's specification. Also refer to Appendix E: "Technical Specifications" - Understanding the Product Code.**

ARMATURE CURRENT (IA CAL)

Note the maximum armature current from the motor rating plate and set this value in the ARMATURE CURRENT parameter. If in doubt, use Ohms Law to calculate the current i.e. Field Volts/Field Resistance.

FIELD CURRENT (IF CAL)

Note the nominal field current from the motor rating plate and set this value in the FIELD CURRENT parameter.
Frame H: The factory setting of the power board calibration switches allows for a Field Current range of up to 20A. If the Field Current is greater than 20A, refer to Chapter 7: "Trips and Fault Finding" - Power Board Current Calibration Switches (Frames 6 & H).

FLD.CTRL MODE

Set the field control mode to Field Voltage or Field Current control. Refer to Appendix D: “Programming” - FIELD CONTROL for further information. By default, the drive is operating in Voltage Control mode.

FLD.VOLTS RATIO

Enter the calculated ratio into the parameter given by the equation:

$$100 \times \frac{\text{FIELD VOLTS}}{\text{RMS AC INPUT VOLTS}}$$

The maximum value obtainable is 90%, i.e. field output = 0.9 x Vac. Setting this parameter higher than the default 90% will not increase the field output.

Selecting Speed Feedback

AUXILIARY POWER ONLY IS CONNECTED AT THIS STAGE

Using the Keypad, select the correct speed feedback option. The default is ARM VOLTS FBK.

The selections are ARM VOLTS FBK, ANALOG TACH, ENCODER and ENCODER/ANALOG.

MMI Menu Map

1 CONFIGURE DRIVE
SPEED FBK SELECT

NOTE **Refer to Chapter 3: "Installing the Drive" - Speed Feedback and Technology Options for further information.**

Speed Feedback Option Boards

Analog Tacho Calibration Option Board

WARNING

Do not fit this Option Board with the drive powered-up.

NOTE **This option is not required if armature voltage or encoder feedback is to be used.**

The board plugs into the front of the drive. Mount it on the 10-pin connector correctly using the 4 left-hand pins. This will allow the locating pegs to align with the mounting holes. It also requires the connecting link wire to the control board. This link is inherent but must be connected for operation.

The board supports AC and DC analog tachos with a calibration range of 10 to 200V:

- For AC tacho feedback, use terminals G1 and G2 with the selector switch in the AC position.
- For DC tacho feedback, use terminals G3 and G4 with the selector switch in the DC position

Calculate the tacho voltage by multiplying the required maximum speed by the tacho calibration factor, e.g. motor speed 1500 rpm and tacho calibration factor 60V per 1000 rpm is 90V.

The tacho calibration volts are set using the 2 in-line switches (10-way). The switches set Volts in units and tens. The hundreds are set by the 1-way switch. The illustration above shows a setting of 90V. When setting switches for AC tachos, calibrate the switches for √2 x voltage feedback required, i.e. √2 x 90V = 127V. This adjusts the rms value received from an AC tacho into the required peak value.

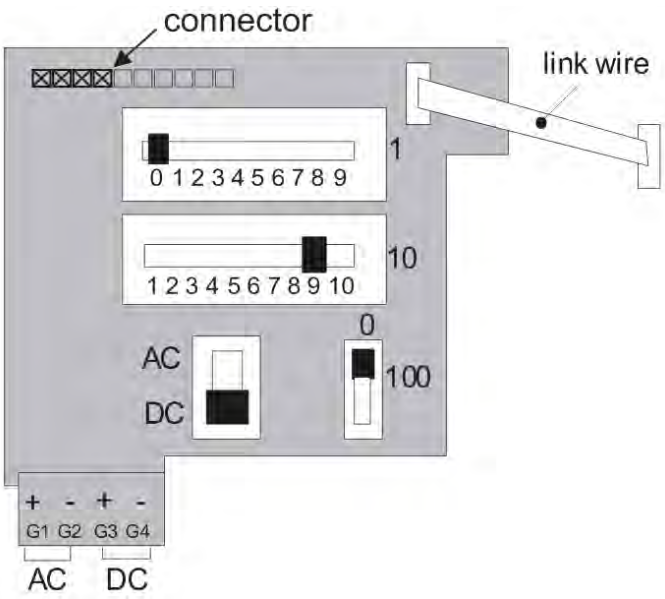

NOTE **Do not set the calibration volts to greater than 200V, the maximum terminal block rating.**

Calibration for Voltages Greater than 200V

For full speed tacho voltages greater than 200V, an external resistor, value RE, is required in series with the tachogenerator connection to terminal G3.

Set the switches on the Tacho Calibration Option Board to give a value of 200V, as shown opposite.

RE then is given by the formula:

$$RE = \frac{(\text{tachovolts} - 200)}{5}\ k\Omega$$

The power dissipation of this resistor is given by the formula

W = (tacho volts - 200) x 5 milliwatts

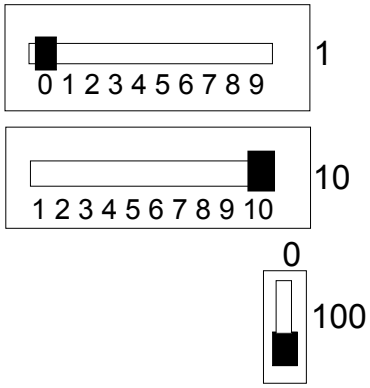

Microtach and Encoder Feedback Option Boards

WARNING!
Do not fit this Option Board with the drive powered-up.

IMPORTANT ***The Microtach Option Board is fitted with an 11 pin connector. Fit this as shown in the diagram below.***

The board plugs into the front of the drive. Mount it on the 10-pin connector correctly. This will allow the locating pegs to align with the mounting holes.

These option boards assume a 1000 lines per rev encoder is being used. Speed is set directly by the ENCODER RPM parameter. If you are using an alternative lines per rev encoder, you must set the ENCODER LINES parameter on the Keypad later in the Operating Instructions.

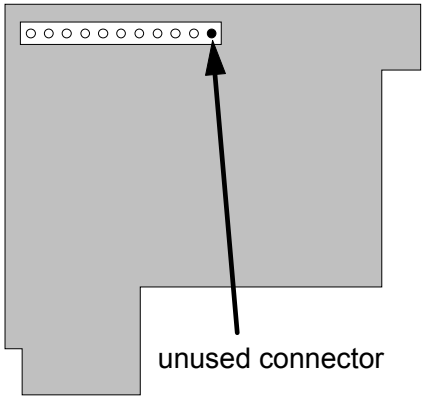

Save Your Settings

CONFIGURE ENABLE

Set to FALSE.

MMI Menu Map
1 CONFIGURE DRIVE
CONFIGURE ENABLE

PARAMETER SAVE

Perform a Parameter Save to save your settings. Press the ▲ (UP) key, as instructed.

MMI Menu Map
1 PARAMETER SAVE
PARAMETER SAVE

Initial Start-Up Routine

Complete steps 1 to 18, including steps 16 and 17 as appropriate.

NOTE **This routine assumes that the Drive's control terminals are wired as shown in the Minimum Connection Requirements drawings in Chapter 3. The field is "Enabled" and is in Voltage Control (default settings).**

IMPORTANT ***Do not change any of the previously made calibration settings once the main contactor is energised.***

Step 1: Check the Speed Setpoints operate correctly

ANIN1 (terminal A2) : an additional setpoint
ANIN2 (terminal A3) : an additional setpoint
ANIN3 (terminal A4) : this is the normal speed reference source

Use the Keypad to display the value of the ANIN 3 (A4) (and the additional setpoints if present).
Vary the setpoint potentiometer and observe the input voltage change.

The sum of all the setpoints is given by the value of the SPEED SETPOINT parameter. This is also output at terminal A8.

MMI Menu Map

1 DIAGNOSTICS
- ANIN 1 (A2)
- ANIN 2 (A3)
- ANIN 3 (A4)
- SPEED SETPOINT

Step 2: Check the External Current Clamps

Use the Keypad to check the opertation of the external current clamp settings (refer to Appendix D: "Programming" - ANALOG INPUTS for setting details).

MMI Menu Map

1 DIAGNOSTICS
- ANIN 4 (A5)
- ANIN 5 (A6)

- *If using a single external clamp (Unipolar), terminal C6 low (0V):*
  Check that ANIN 5 (A6) is +10V or is adjustable up to +10V **Set to +10V**
- *If using dual external clamps (Bipolar), terminal C6 high (+24V):*
  Check the ANIN 5 (A6) is at +10V or is adjustable up to +10V **Set to +10V**
  Check that ANIN 4 (A5) is at -10V or is adjustable up to -10V **Set to -10V**

Setting the current clamps to 10V means that the current demand is controlled by the MAIN CURR. LIMIT parameter for the purposes of this inital Start routine.

Step 3: Check the Speed Feedback signals

If possible, check the speed feedback by rotating the shaft manually in the forward direction.

MMI Menu Map

1 DIAGNOSTICS
- SPEED FEEDBACK
- TACH INPUT
- ENCODER

- *Analog Tachogenerator:*
  The Analog Tach Input should go positive.
- *MICROTACH/Encoder*
  The ENCODER parameter should give a positive reading.

If there is no feedback signal from the Microtach, verify that both LEDs on the Microtach Option Board are illuminated. If either LED is extinguished, check that 24V is applied to the Microtach and all ancillary products, and that the fibre optic transmission length is not exceeded.

Step 4: Select the Speed Feedback method

Write down the MAIN CURR. LIMIT parameter's value here: %

Set the MAIN CURR. LIMIT parameter to **0.00%**.

MMI Menu Map
1 SETUP PARAMETERS
2 CURRENT LOOP
MAIN CURR. LIMIT

Select ARMATURE VOLTAGE initially for the speed feedback method in the SPEED FBK SELECT parameter.

MMI Menu Map
1 CONFIGURE DRIVE
SPEED FBK SELECT

Perform a PARAMETER SAVE. Refer to Chapter 6: "The Keypad" - Saving Your Application.

MMI Menu Map
1 PARAMETER SAVE
PARAMETER SAVE

Step 5: Start the Drive using Auxiliary Power only

With +24V present at terminals B8 and B9 (Program Stop and Coast Stop):

- *Apply the "Start/Run" command to C3*

  The main 3-phase contactor should pull-in and remain energised, (it may de-energise almost immediately due to the 3-phase fail alarm).

- *Remove the "Start/Run" command from C3*

  The main 3-phase contactor should drop-out and remain de-energised.

MMI Menu Map
1 DIAGNOSTICS
PROGRAM STOP
CONTACTOR CLOSED

If the above sequence does not function, remove the auxiliary power and check start/stop sequencing and contactor wiring.

If the contactor is left energised for an extended time during this check, the controller will detect that 3-phase is not connected and switch off the contactor, flagging the 3-phase alarm.

IMPORTANT ***The main contactor should never be operated by any means other than the drive internal controls, nor should any additional circuitry be placed around the contactor coil circuit.***

WARNING

Do not continue until the stop/start circuits and contactor operate correctly.

Step 6: Power-down the drive and connect the 3-phase supply; power-up the Drive

Switch off all power supplies to the equipment and, when the whole system is totally isolated and safe, re-connect the main 3-phase power supply.

- Switch on the auxiliary supply.
- Switch on the main 3-phase supply.

MAIN & AUXILIARY POWER ARE CONNECTED AT THIS STAGE

Step 7: Set the Speed Setpoint(s) to 5%

Set the Speed Setpoint(s) to 5% so that the value of the SPEED SETPOINT parameter is 5.0%.
This is also output at Terminal A8.

MMI Menu Map

1 DIAGNOSTICS
SPEED SETPOINT

Step 8: Check the MAIN CURR LIMIT is zero

Double-check that the MAIN CURR. LIMIT is set to 0.00%.

MMI Menu Map

1 SETUP PARAMETERS
2 CURRENT LOOP
MAIN CURR.LIMIT

Step 9: Start the Drive and check the field voltage

Apply the Start/Run command and check that 3-phase mains is applied to Power Terminals L1, L2 and L3.

Apply 24V to "Enable" (C5) and immediately check that the correct field voltage appears between the auxiliary supply terminals F+ and F-.
(Note that any external interlocks which affect the Enable input C5 will affect the operation of the drive.)

Caution

This is high voltage DC, proceed with caution. Do not continue if this is incorrect, switch off all supplies and check connections.
Refer to 9.1 or 9.2 on the next page.

If the field voltage is incorrect, make the following checks:

Step 9.1 Internally Supplied Field:

MMI Menu Map
1 SETUP PARAMETERS
2 FIELD CONTROL
FIELD ENABLE

- Check that 3-phase is applied to terminals L1, L2 and L3 when the main contactor is closed.
- Check that the coding fuses on the power board or suppression board are healthy.
- The FIELD ENABLE parameter should be set to ENABLE.
- With the FIELD ENABLE parameter in view, press the ↓ (DOWN) key. The display changes to FLD CTRL MODE. Press the **M** key. Is this set to VOLTAGE CONTROL or CURRENT CONTROL?
  - ➢ If set to VOLTAGE CONTROL, check the value of the FLD. VOLTS RATIO parameter. Set this to 65% to obtain 300V fields from 460V supplies.
  - ➢ If set to CURRENT CONTROL, check the field current calibration set-up, refer back to "Calibration".

MMI Menu Map
1 CONFIGURE DRIVE
FLD. VOLTS RATIO

If the field volts are at maximum, check the field continuity. (The field current may initially be lower than the rated value due to a cold field.)

Step 9.2 Externally Supplied Field: (not available on Frame 1 units)

Refer to Chapter 3: "Installing the Drive" - Motor Field Options for conversion details.

MMI Menu Map
1 SETUP PARAMETERS
2 FIELD CONTROL
FIELD ENABLE

- Check the voltage applied (externally fused) to terminals FL1 and FL2.
- Check the phasing of voltage applied to FL1 and FL2:
  - ➢ FL1 must be connected directly or indirectly to the Red phase on main power terminal L1.
  - ➢ FL2 must be connected directly or indirectly to the Yellow phase on main power terminal L2.
- The FIELD ENABLE should be set to ENABLE.
- With the FIELD ENABLE parameter in view, press the ↓ (DOWN) key. The display changes to FLD CTRL MODE. Press the **M** key. Is this set to VOLTAGE CONTROL or CURRENT CONTROL?
  - ➢ If set to VOLTAGE CONTROL, check the value of the FLD. VOLTS RATIO parameter. Set this to 65% to obtain 300V fields from 460V supplies.
  - ➢ If set to CURRENT CONTROL, check the field current calibration set-up, refer back to "Calibration".

MMI Menu Map
1 SETUP PARAMETERS
2 FIELD CONTROL
3 FLD VOLTAGE VARS
FLD. VOLTS RATIO

Check that 3-phase is applied to terminals L1, L2 and L3.

Step 10: Check the Keypad

Check that the HEALTH and RUN Keypad LEDs are now illuminated, also either the FWD or REV LED.

Step 11: Check the STANDSTILL LOGIC parameter

If the STANDSTILL LOGIC parameter in the STANDSTILL menu at level 2 is ENABLED, temporarily set it to DISABLED.

MMI Menu Map

1 SETUP PARAMETERS
2 STANDSTILL
STANDSTILL LOGIC

Caution

During the following set-up instructions, be ready to STOP the drive should the motor try to overspeed.

If 5% speed (approximately) is exceeded and the motor continues to accelerate a reversed connection is implied, decrease the MAIN CURR.LIMIT parameter to zero. Open the main contactor and disconnect all supplies. Reverse the motor connections.

Step 12: Turn the motor and check direction of rotation

Slowly increase the MAIN CURR.LIMIT parameter towards a maximum of 20%. At some point the motor will begin to rotate as the parameter value is increased. The motor speed will settle at 5% of full speed. If the motor is loaded it may require more than 20% current limit to turn the motor.

MMI Menu Map

1 SETUP PARAMETERS
2 CURRENT LOOP
MAIN CURR.LIMIT

- If the motor does not turn at all when the MAIN CURR.LIMIT is increased to 20%, check the CURRENT FEEDBACK parameter to verify that current is flowing into the armature. If no current is flowing, switch off and check the armature connections.
  - ➢ Is the motor connected to the drive?
  - ➢ Verify that Calibration has been carried out correctly.

MMI Menu Map

1 DIAGNOSTICS
CURRENT FEEDBACK

Check the direction of rotation is suitable for your process:

- If the direction of rotation is correct, then the armature and field are wired correctly.
- If direction of rotation is incorrect then open the main contactor and disconnect all supplies. Reverse either the armature or field wiring .

WARNING

Do not continue until Step 12 is completed satisfactorily.

Step 13: Check the Speed Feedback sign

With the motor rotating in the correct direction, check the sign of the feedback from the Tachometer or Encoder using the appropriate Diagnostic menu: TACH INPUT or ENCODER.

MMI Menu Map
1 DIAGNOSTICS
- TACH INPUT
- ENCODER

- If the diagnostic value is positive (correct), stop the drive. Re-instate your selection for the SPEED FBK SELECT parameter (if other than ARM VOLTS FBK) and run the drive to check operation. If the test is successful go to Step 14.
- If the diagnostic value is negative:
  - ➢ Analog Tach: reverse the connections of the analog tach on terminals G3 and G4
  - ➢ Encoder: change the sign of the encoder feedback parameter.

  Re-instate your selection for the SPEED FBK SELECT parameter (if other than ARM VOLTS FBK) and run the drive to check operation.

MMI Menu Map
1 CONFIGURE DRIVE
- ENCODER SIGN

MMI Menu Map
1 CONFIGURE DRIVE
- SPEED FBK SELECT

MMI Menu Map
1 PARAMETER SAVE
- PARAMETER SAVE

When satisfactory operation has been achieved, perform a PARAMETER SAVE. Refer to Chapter 6: "The Keypad" - Saving Your Application.

Step 14: Adjusting the Speed Setpoint

With the MAIN CURR.LIMIT parameter set to 20% or to the level required to achieve rotation, set the Speed Setpoints so that the value of the SPEED SETPOINT is about 10%, 1.0V at setpoint input (Terminal A8). The motor will accelerate to this speed setting.

Step 14.1 *4 Quadrant Drives which require reverse rotation:*
Alter the Speed Setpoints so that the value of the SPEED SETPOINT parameter is about -10% and check that motor runs in the reverse direction.

MMI Menu Map
1 DIAGNOSTICS
- SPEED SETPOINT

Step 14.2 *Adjustment of ZERO SPEED OFFSET parameter (Ensure STANDSTILL is DISABLED as in Step 11):*

- 4 Quadrant, non-reversing drives

  Set the Speed Setpoint potentiometer to zero and adjust the ZERO SPEED OFFSET parameter for minimum shaft rotation.

MMI Menu Map
1 SETUP PARAMETERS
2 CALIBRATION
- ZERO SPD.OFFSET

- 2 Quadrant, non-reversing drives

  Set the Speed Setpoint potentiometer to zero and adjust the ZERO SPEED OFFSET parameter until the shaft is just rotating then reduce level until the shaft stops.

- 4 Quadrant, reversing drives
  Set the ZERO SPEED OFFSET parameter to balance maximum speed in forward and reverse directions. You can also set STANDSTILL LOGIC parameter to ENABLE if a stationary shaft is required.

MMI Menu Map
1 SETUP PARAMETERS
2 STANDSTILL
- STANDSTILL LOGIC

Step 15: Fine adjustments for Speed Feedback

Gradually increase the Speed Setpoints so that the value of the SPEED SETPOINT (DIAGNOSTIC menu) is at maximum. Check the shaft speed is correct.

MMI Menu Map

1 SETUP PARAMETERS
2 CALIBRATION
- ARMATURE V CAL.
- ANALOG TACH CAL.
- ENCODER RPM

If fine adjustment is required adjust the calibration as appropriate to the speed feedback selection:

- Armature Voltage feedback has a +2/-10% trim, greater changes outside this range require re-setting of the calibration switches.
- Analog Tachogenerator has a +2/-10% trim, greater changes outside this range require re-setting of the calibration switches.
- The MICROTACH/Encoder should give an absolute rotational speed for which adjustment is unnecessary however the motor speed may not be the relevant factor thus speed of rotation can be altered by simply adjusting the calibration.

Step 16: Adjustment for Field Weakening

If the drive is to be run with a top speed greater than the base speed then `field weakening' is used to achieve that top speed. (Refer to Chapter 5: "Control Loops" - Field Control for a more detailed explanation).

MMI Menu Map

1 CONFIGURE DRIVE
- FLD CTRL MODE

NOTE **The drive must be operating in Field Current Control. Select CURRENT CONTROL on the FLD CTRL MODE parameter. Also, field weakening cannot be used if you have Armature Voltage feedback selected.**

IR COMPENSATION (CALIBRATION function block) is also used in field weakening applications to improve dynamic response and speed holding stability.

To set up IR COMPENSATION:

Set FIELD ENABLE to DISABLED (FIELD CONTROL function block). Start the drive with a 5% speed demand and ensure the ACTUAL POS I LIMIT is 100% (diagnostic). This should stall the drive at zero speed and cause it to pass 100% current. Monitor the BACK EMF diagnostic and note the value (typically anything up to 17% is normal). Stop the drive and enter this value into IR COMPENSATION and repeat the test to ensure that BACK EMF then reads zero.

Run the drive up to base speed and check the motor volts are correct.

In the FLD WEAK VARS menu, verify that field weakening is selected (FIELD WEAK ENABLE) and that the MIN FLD CURRENT parameter is set appropriately. Adjust the maximum BEMF volts to the required scaled level by setting the MAX VOLTS parameter.

MMI Menu Map

1 SETUP PARAMETERS
2 FIELD CONTROL
3 FLD CURRENT VARS
4 FLD WEAK VARS
- FLD. WEAK ENABLE
- MIN FLD CURRENT
- MAX VOLTS

Increase the speed above the base speed, checking that the armature volts remain constant whilst the field current reduces.

Gradually increase to maximum speed. Monitor the armature volts at maximum speed and trim the speed using the appropriate control as detailed in Step 15. *PROCEED WITH CARE - MAKE SMALL ADJUSTMENTS.*

Trim the MIN FLD CURRENT parameter to the appropriate setting (5% lower than the field current at full speed).

Step17: Adjustment for Reversing Drives

For reversing drives, check the maximum reverse speed.

Imbalance in reversing drives can only be corrected by adjusting the ZERO SPD OFFSET parameter, which may be to the detriment of operation at Zero Setpoint.

MMI Menu Map

1 SETUP PARAMETERS
2 CALIBRATION
ZERO SPD.OFFSET

Step 18: Re-setting the MAIN CURR. LIMIT parameter

Re-set the MAIN CURR. LIMIT parameter to the original setting that you previously noted in Step 4. If in doubt, set it to 100% to correspond to 100% full load current (FLC).

MMI Menu Map

1 SETUP PARAMETERS
2 CURRENT LOOP
MAIN CURR.LIMIT

NOTE **The controller cannot achieve 200% current unless the CUR. LIMIT/SCALER parameter is increased to 200% (from its default setting of 100%). Until this is done, the External Current Clamp will limit the current to 100%, refer to Appendix D: "Programming" - CURRENT LOOP.**

- If the current limit is set higher (maximum 200%) and the motor runs into an overload condition, the current is automatically reduced from the current limit level down to 103% FLC (continual rating).
- If the motor is overloaded, the controller will reduce the current to 103% of the current calibration. (If the motor continues to rotate it may overheat and thermal protection should be provided).
- If the motor is overloaded and the current provided by the controller is not enough to maintain rotation, i.e. it stalls, the controller will trip out showing STALL TRIP alarm, if enabled.

Performance Adjustment

Current Loop - The ARMATURE Autotune Feature

Now perform an Autotune to identify and store the following Current Loop parameters:

PROP. GAIN INT. GAIN DISCONTINUOUS

Initial Conditions

1. Main contactor open, i.e. no Start/Run signal at terminal C3.
2. Set the AUTOTUNE parameter to OFF.
3. Program Stop (terminal B8) and Coast Stop (terminal B9) should be high, i.e. 24V.
4. If the field is being supplied by a third-party controller, remove the field manually. (If the field is internally regulated, Autotune automatically quenches the field).

IMPORTANT ***The shaft may require clamping for certain motors to prevent rotation >20% during the Autotune sequence. If the motor is either a compound motor (series field), has some residual magnetism, or is a permanent magnet motor it WILL rotate and the shaft must be clamped. If in any doubt, CLAMP OR BE READY TO STOP THE MOTOR.***

Performing an Autotune

MMI Menu Map

1 CONFIGURE DRIVE
└ AUTOTUNE

- Set the AUTOTUNE parameter to ARMATURE.
- Close the main contactor, i.e. Start/Run signal to terminal C3.
- Energise the Enable terminal (C5).

The Autotune sequence is initiated. When complete (after approximately 10 seconds), the main contactor is opened automatically signalling the end of the sequence and the AUTOTUNE parameter is reset to OFF.

- **Perform a PARAMETER SAVE now**. Refer to Chapter 6: "The Keypad - Saving Your Application.
- If necessary, restore field connections and remove the mechanical clamp.

Autotune Failed?

- The Keypad displays the message AUTOTUNE ABORTED
  If any one of the Initial Conditions above are removed, or the Autotune sequence times out (after 2 minutes), then the Autotune sequence is aborted causing the main contactor to drop out.
- The Keypad displays the message AUTOTUNE ERROR
  - The motor shaft was rotating, or was caused to rotate.
  - The field current was seen to exceed 6%, when a field-off Autotune had been selected, or the field current stopped during a field-on Autotune.
  - The drive to armature wiring was open-circuit.
  - The discontinuous current boundary was found to exceed 200% of either the stack rating or the nominated motor armature current rating
  - Large imbalance in the three-phase voltages of the supply.
  - A hardware fault relating to current feedback was detected on the control board.

NOTE **Refer to Chapter 5: "Control Loops" - Current Control for manual tuning instructions.**

Speed Loop Adjustment

You will need to adjust the Speed Loop for your particular application although in most cases the default settings are acceptable. The optimum Speed Loop performance is achieved by adjusting the PROP. GAIN and INT. TIME CONST. parameters.

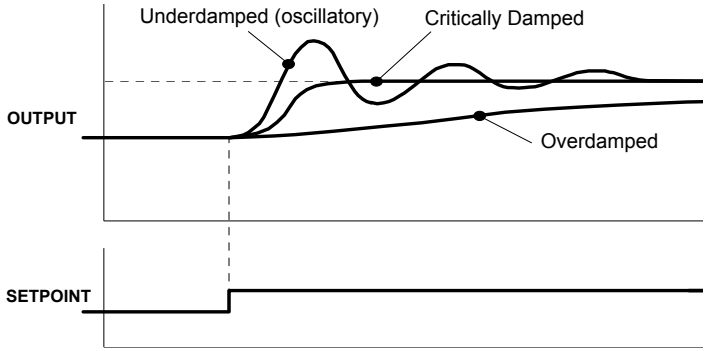

A PI controller is used to control the response of any closed loop system. It is used specifically in system applications involving the control of drives to provide zero steady state error between Setpoint and Feedback, together with good transient performance.

Proportional Gain (PROP. GAIN)
This is used to adjust the basic response of the closed loop control system. The speed error is multiplied by the Proportional Gain to produce a motor current demand.

Integral (INT.TIME CONST.)
The Integral term is used to reduce steady state error between the setpoint and feedback values of the controller by accumulating current demand in proportion to the error input. If the integral is set to zero, then there will always be a steady state error.

A Method for Setting-up the PI Gains

The gains should be set-up so that a critically damped response is achieved for a step change in setpoint. An underdamped or oscillatory system can be thought of as having too much gain, and an overdamped system has too little.

To set up the P gain, set the I gain to zero. Apply a step change in setpoint that is typical for the System, and observe the speed feedback response on terminal A7. Increase the gain and repeat the test until the system becomes oscillatory. At this point, reduce the P gain until the oscillations disappear. This is the maximum value of P gain achievable.

If the steady state error is significant, i.e. the feedback is not sufficiently close to the setpoint value, the I term needs to be used. As before, increase the I gain and apply the step change. Monitor the output. If the output becomes oscillatory, reduce the P gain slightly. This should reduce the steady state error. Increasing the I gain further may reduce the time to achieve zero steady state error.

Correct Response

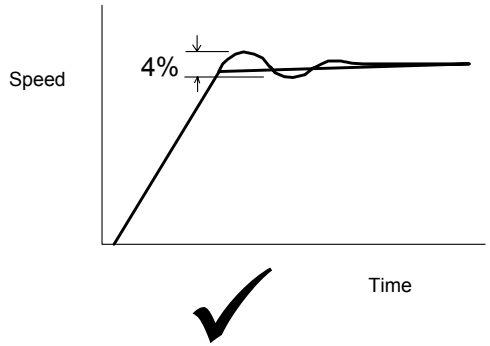

Critically Damped Response with no more than 4% of maximum speed from first overshoot to first undershoot

Starting and Stopping Methods

Stopping Methods

- If the Drive is “non-regenerative” (2-quad - 591+) it effectively coasts to a stop once the current demand reverses.
- If the Drive is “regenerative” (4-quad - 590+) then it can stop faster because it uses energy from the load, i.e. reverse current is allowed to flow.

Normal Stop and Program Stop are only relevant for a “regenerative” controller.

The parameters STOP TIME and PROG STOP TIME have associated timers which initiate a Coast Stop after the timed period.

The Coast Stop has direct control of the Run relay with no intervening electronics.

All associated parameters can be found in the STOP RATES menu.

MMI Menu Map

1 SETUP PARAMETERS
2 STOP RATES

Terminal	Description	Function	Parameter	Priority
B9	Coast Stop	Motor coasts to rest	--	Overrides Program Stop and Normal Stop
B8	Program Stop	Motor decelerates at Program Stop rate	PROG STOP TIME	Overrides Normal Stop
C3	Start/Run (Normal Stop)	Motor decelerates at Normal Stop rate	STOP TIME	--

Normal Stop (C3)

This is achieved by removing 24V from Terminal C3.

The motor speed is brought to zero in a time defined by the STOP TIME parameter.

MMI Menu Map

1 SETUP PARAMETERS
2 STOP RATES
STOP TIME

During Normal Stop, the current is limited by the MAIN CURR. LIMIT parameter

MMI Menu Map

1 SETUP PARAMETERS
2 CURRENT LOOP
MAIN CURR.LIMIT

NORMAL STOP

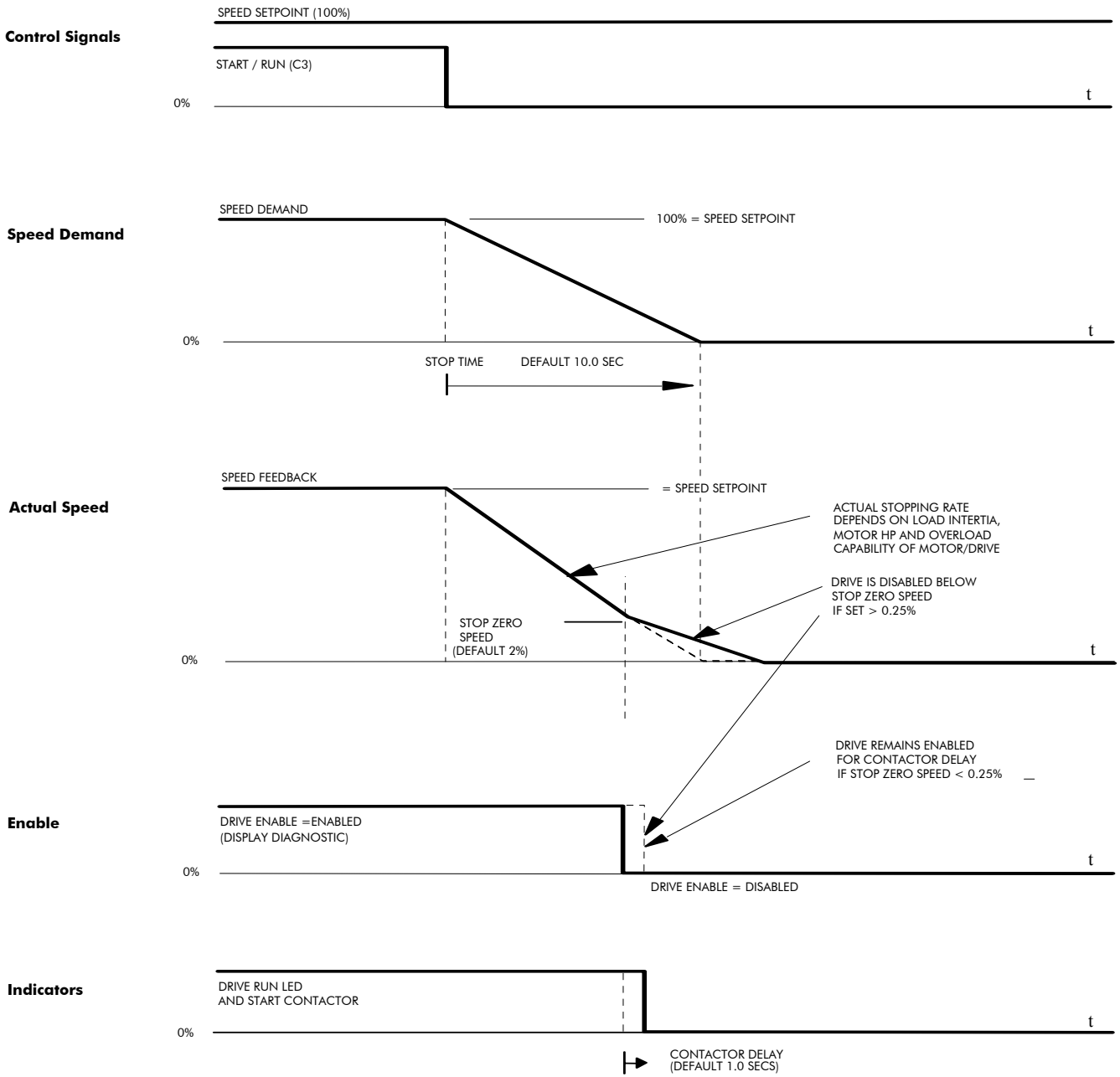
Control Signals
SPEED SETPOINT (100%)
START / RUN (C3)
0%
t
Speed Demand
SPEED DEMAND
100% = SPEED SETPOINT
0%
t
STOP TIME
DEFAULT 10.0 SEC
Actual Speed
SPEED FEEDBACK
= SPEED SETPOINT
ACTUAL STOPPING RATE
DEPENDS ON LOAD INTERTIA,
MOTOR HP AND OVERLOAD
CAPABILITY OF MOTOR/DRIVE
DRIVE IS DISABLED BELOW
STOP ZERO SPEED
IF SET > 0.25%
STOP ZERO
SPEED
(DEFAULT 2%)
0%
t
DRIVE REMAINS ENABLED
FOR CONTACTOR DELAY
IF STOP ZERO SPEED < 0.25%
Enable
DRIVE ENABLE =ENABLED
(DISPLAY DIAGNOSTIC)
0%
t
DRIVE ENABLE = DISABLED
Indicators
DRIVE RUN LED
AND START CONTACTOR
0%
t
CONTACTOR DELAY
(DEFAULT 1.0 SECS)

TIME-OUT IN NORMAL STOP

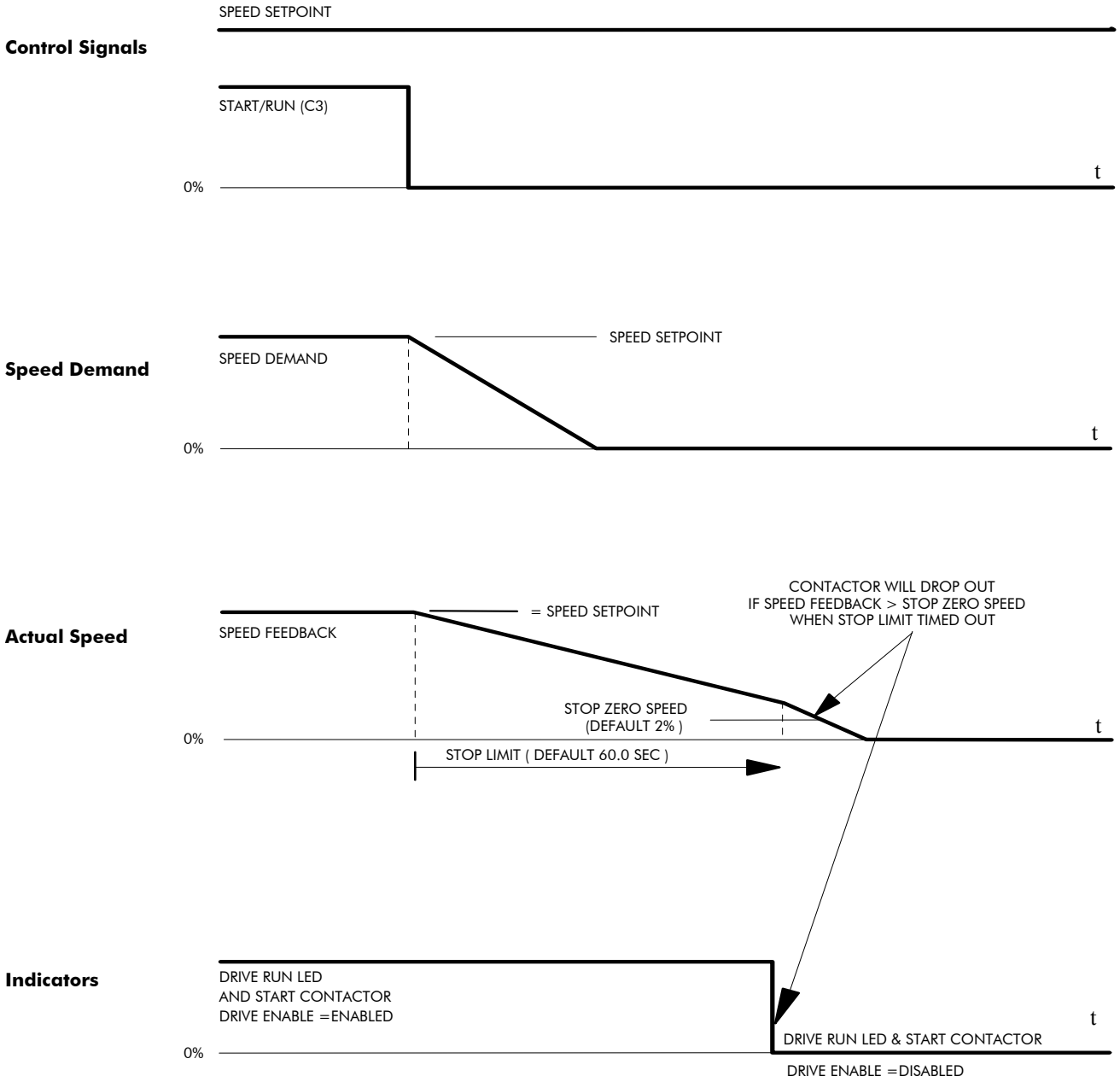

Program Stop (B8)

MMI Menu Map

1 SETUP PARAMETERS
2 STOP RATES
- PROG. STOP TIME
- PROG. STOP I LIMIT

This is achieved by removing 24V from Terminal B8.

The motor speed is brought to zero under conditions defined by the PROG. STOP TIME (ramp rate) and PROG. STOP I LIMIT parameters.

PROGRAM STOP TIMING

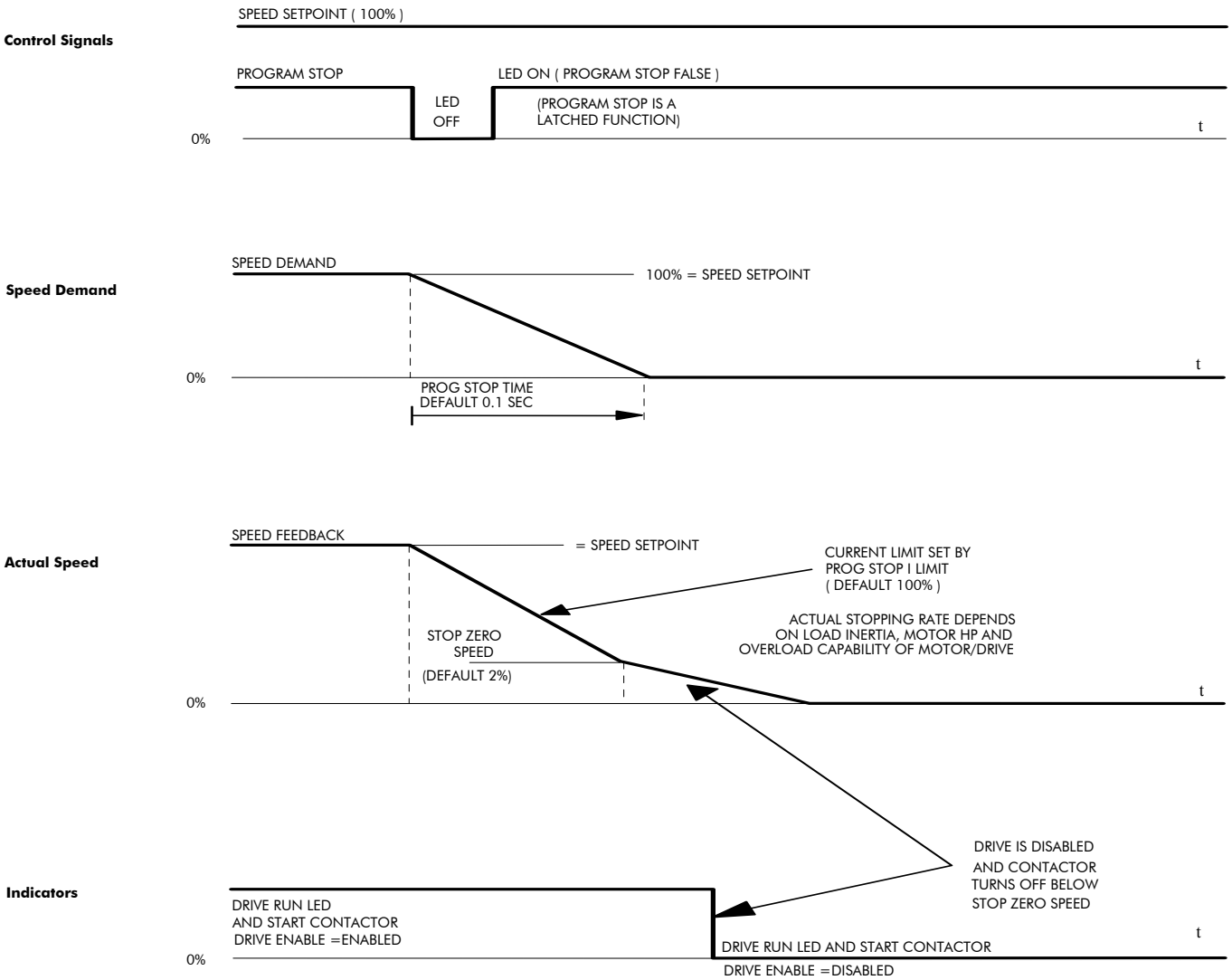

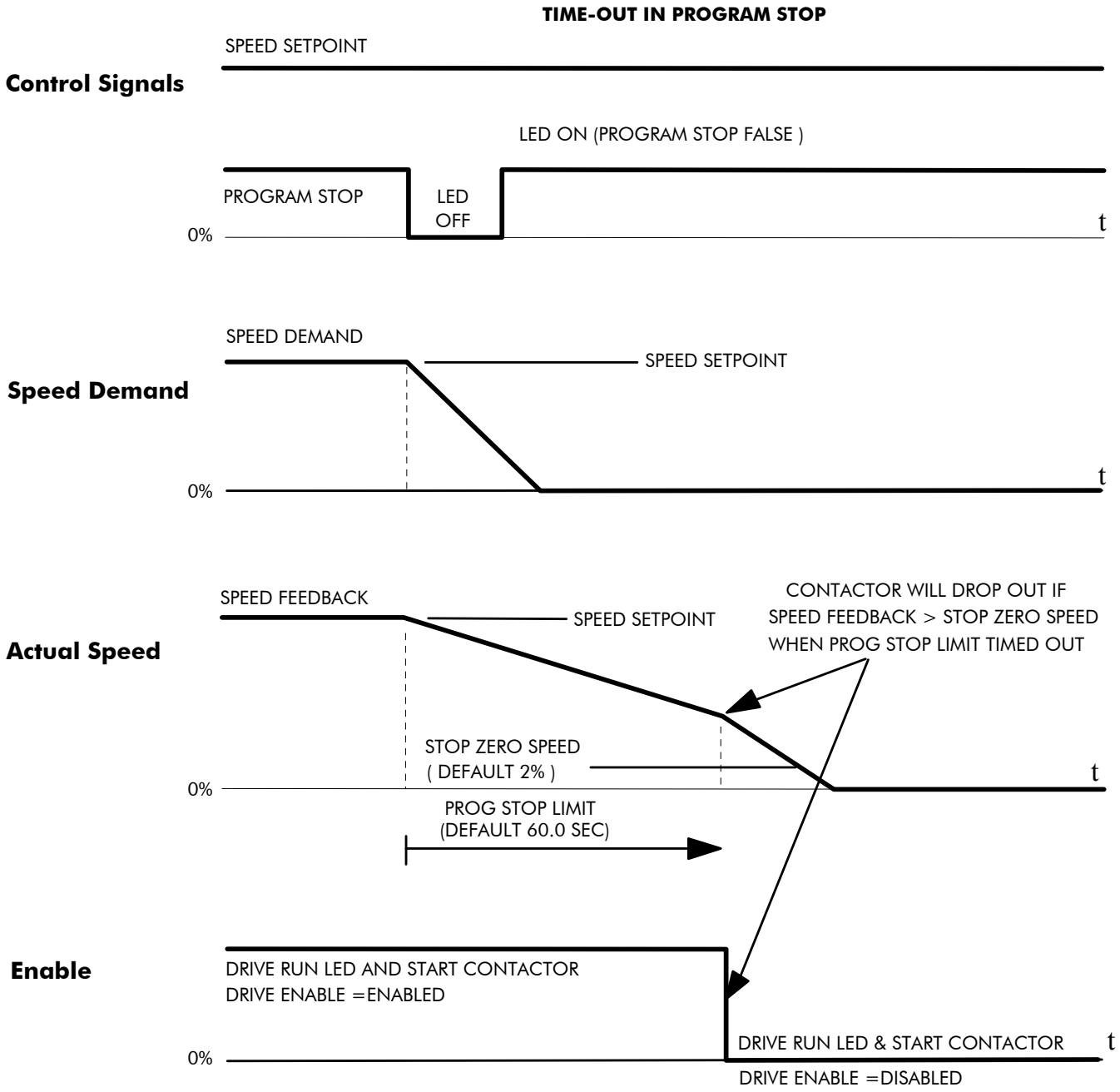
TIME-OUT IN PROGRAM STOP
Control Signals
SPEED SETPOINT
LED ON (PROGRAM STOP FALSE)
PROGRAM STOP
LED
OFF
0%
t
Speed Demand
SPEED DEMAND
SPEED SETPOINT
0%
t
Actual Speed
SPEED FEEDBACK
SPEED SETPOINT
CONTACTOR WILL DROP OUT IF
SPEED FEEDBACK > STOP ZERO SPEED
WHEN PROG STOP LIMIT TIMED OUT
STOP ZERO SPEED
(DEFAULT 2%)
0%
t
PROG STOP LIMIT
(DEFAULT 60.0 SEC)
Enable
DRIVE RUN LED AND START CONTACTOR
DRIVE ENABLE =ENABLED
DRIVE RUN LED & START CONTACTOR
DRIVE ENABLE =DISABLED
0%
t

Coast Stop (B9)

This is achieved by removing 24V from Terminal B9.

The stack is automatically quenched and the contactor is opened. The motor coasts to a stop.

NOTE **The motor coast stop rate is dictated by the motor inertia - the drive does not control the motion.**

MMI Menu Map

1 SETUP PARAMETERS

2 STANDSTILL

STANDSTILL LOGIC

ZERO THRESHOLD

Standstill

Refer to Appendix D: “Programming” - STANDSTILL.

The Trip Condition

When a trip condition is detected, a similar stopping method to Coast Stop is used. The power stack cannot be re-enabled until the trip condition has been cleared and successfully reset.

Refer to Chapter 7: “Trips and Fault Finding” for further details.

Normal Starting Method

To achieve a normal start of the Drive:

1. Apply 24V to Terminal C5 (Enable)
2. Apply 24V to Terminal C3 (Start)

NOTE **The Drive will not start if there are alarms present, or if Terminals B8 (Program Stop) or B9 (Coast Stop) are low, 0V.**

Ensure that Program Stop and Coast Stop are valid before Start/Run is applied.

Advanced Starting Methods

Starting Several Drives Simultaneously

1. Apply 24V to Terminal C3 (Start)
2. Use Terminal C5 (Enable) to synchronise the start-up of the Drives

Jog

NOTE **The Drive will not start if there are alarms present.**

This facility provides two dedicated jog setpoints (or perhaps an Inch Forward/Inch Reverse). Activating Jog runs the motor at speeds set by JOG SPEED 1 or JOG SPEED 2. The JOG/SLACK::MODE parameter selects JOG SPEED 1 or 2.

1. Apply 24V to Terminal C5 (Enable)
2. Apply 24V to Terminal C4 (Jog Mode)

Refer to Appendix D: “Programming” - JOG/SLACK for further information. Also refer to the STOP RATES function block: the CONTACTOR DELAY parameter is used to prevent multiple operations of the main contactor from rapid use of the Jog switch.

MMI Menu Map

1 SETUP PARAMETERS

2 JOG/SLACK

- JOG SPEED 1
- JOG SPEED 2
- TAKE UP 1
- TAKE UP 2
- CRAWL SPEED
- MODE
- RAMP RATE

Crawl

NOTE **The Drive will not start if there are alarms present.**

This facility provides a dedicated crawl setpoint. Activating Crawl runs the motor at the speed set by CRAWL SPEED.

1. Apply 24V to Terminal C5 (Enable)
2. Set JOG/SLACK::MODE parameter (Tag No. 228) to **TRUE.**
3. Apply 24V to Terminal C3 (Start) and Terminal C4 (Jog Mode) simultaneously to start the Drive using the crawl speed, in Forward or Reverse.

When selecting CRAWL, apply Start (C3) and Jog (C4) simultaneously, otherwise you may experience Modes 3 or 6 momentarily. Refer to Appendix D: “Programming” - JOG/SLACK for further information (see the Setpoint Selection Table).

MMI Menu Map

1 SETUP PARAMETERS

2 JOG/SLACK

- JOG SPEED 1
- JOG SPEED 2
- TAKE UP 1
- TAKE UP 2
- CRAWL SPEED
- MODE
- RAMP RATE

Take Up Slack

NOTE **The Drive will not start if there are alarms present.**

This facility provides two additional Take Up Slack setpoints. Activating Take Up Slack runs the motor at the speed set by "speed setpoint + TAKE UP1" or "speed setpoint + TAKE UP 2".

MMI Menu Map

1 SETUP PARAMETERS

2 JOG/SLACK
- JOG SPEED 1
- JOG SPEED 2
- TAKE UP 1
- TAKE UP 2
- CRAWL SPEED
- MODE
- RAMP RATE

TAKE UP SLACK 1:

1. Apply 24V to Terminal C5 (Enable).
2. Apply 24V to Terminal C3 (Start) to accelerate to set speed.
3. Set JOG/SLACK::MODE parameter (Tag No. 228) to **FALSE**.
4. Apply 24V to Terminal C4 (Jog Mode) to run the motor at "speed setpoint + TAKE UP 1".
5. Remove 24V from Terminal C4 (Jog Mode) to run the motor at speed setpoint.

TAKE UP SLACK 2:

6. Apply 24V to Terminal C5 (Enable).
7. Apply 24V to Terminal C3 (Start) to accelerate to set speed.
8. Set JOG/SLACK::MODE parameter (Tag No. 228) to **TRUE** to run the motor at "speed setpoint + TAKE UP 2".
9. Set JOG/SLACK::MODE parameter (Tag No. 228) to **FALSE** to run the motor at speed setpoint .

Refer to Appendix D: “Programming” - JOG/SLACK for further information (see the Setpoint Selection Table).

Chapter 5

Control Loops

This chapter explains the principle of operation, and provides help on setting up the control loops correctly.

Control Loops - Principle of Operation 5-1
Current Loop 5-1
Speed Loop 5-4
Field Control 5-5
Set-Up Notes 5-5
Field Weakening 5-6
Standby Field 5-7

Control Loops - Principle of Operation

NOTE **Selection between Current Control or Speed Control (default) is made by the I DMD ISOLATE (current demand isolate) parameter using Digital I/P3 (Terminal C8). If ENABLED the Drive operates as a current controller, and if DISABLED (the default) it operates as a speed controller.**

MMI Menu Map

1 SETUP PARAMETERS
2 CURRENT LOOP
I DMD ISOLATE

Current Loop

The current loop accepts a demand from either the speed loop, or directly from the plant, and forms an error signal which is the difference between demand and average value of feedback. The error signal is fed into a Proportional + Integral compensator which produces the output of the current loop, i.e. the firing angle signal.

In the Drive, the error signal is created in two different forms:

1. The *average* error is computed as the difference between demand and average value of feedback and fed into the Integral part of the P + I algorithm.
2. The *instantaneous* error is computed as the difference between demand and instantaneous value of feedback and is fed into the Proportional part of the P + I algorithm. This gives higher transient performance since it does not contain any time lag, unlike the average which has a built-in lag of 1/6 of mains cycle. However, the average is the true measurement of torque which is the objective of the current control and this is not affected by the small time lag in achieving zero steady-state error.

The firing angle signal is translated into a certain time delay from the mains zero cross point (obtained via a Phase-Lock-Loop) and this results in a firing command being issued to the thyristor stack every 1/6 of a mains cycle in steady-state.

Some special features of the current controller are discussed separately below.

Adaptive Current Control

The gain of a thyristor 6-pulse converter (voltage-time area over firing angle) drops dramatically at discontinuous values of armature current. Therefore a gain boost is required in the current controller to compensate for that.

In the Drive, this is handled by an adaptive algorithm which allows the current to follow the demand in one step (firing) within the discontinuous region of operation.

Back EMF (BEMF) Estimate

With the motor at standstill, the firing angle for zero current is 120 degrees. When the motor is rotating at different speeds the firing angle for zero current follows a cosine locus.

It is of paramount importance to track this locus as close as possible throughout the speed range if the current loop bandwidth is to be maintained at its highest possible level during current reversals from master to slave bridge and visa-versa.

There are two reasons for the loss of bandwidth at current reversals:

1. The loss of converter gain needs to be compensated in an accurate way which is the objective of the adaptive algorithm.
2. The above algorithm also relies on the right start-up value of firing angle in the incoming bridge in order to minimise both the "dead-time" (time interval of zero current referred to below) as well as the rise time to the required current demand.

In order to get the right start-up value of firing angle the knowledge of the operating BEMF is necessary. In the Drive, this is achieved by a combination of a hardware peak current detector and appropriate software algorithm.

Bridge Changeover Delay

The bridge changeover "dead-time", i.e. time interval of zero current, is programmable from 1 to 1500 (via Reserved Menu) with a default value of 1.

For values from 1 to 6:

The delay can be set at multiples of 1/6 mains period, i.e. max. 6 x 3.33 = 20ms at 50Hz. This is relevant for use with large power converters where it is advisable to allow more time for snubber currents to subside before reversal is enabled. It is also relevant for motors with very large armature inductance where zero current detection is more sensitive and therefore a "factor of safety" in the bridge changeover delay is advisable.

For values from 7 to 1500:

The delay corresponds to 7 x 1.33µs up to 1500 x 1.33µs = 2ms maximum.

Manual Tuning

NOTE **This procedure is rarely used or required, if possible use Autotune.**

If the motor is permanent magnet or (very rarely) wound-field of relatively high permanent magnetism, and the drive is a 4Q drive, then clamp the shaft prior to using the 4Q Autotune process (default). This mode of Autotune produces current pulses on alternate thyristor bridges, and thus the net rotational torque is very low.

There are two circumstances where a manual tuning process would be required:

1. The motor is permanent magnet or (very rarely) wound-field of relatively high permanent magnetism, and the drive is a 2Q drive.
2. The Autotune process has failed with AUTOTUNE ERROR message. The possible causes of an Autotune error are:
   - The motor shaft was rotating, or was caused to rotate.
   - The field current was seen to exceed 6%, when a field-off Autotune had been selected, or the field current stopped during a field-on Autotune.
   - The drive to armature wiring was open-circuit.
   - The discontinuous current boundary was found to exceed 200% of either the stack rating or the nominated motor armature current rating (see **A** below).
   - Large imbalance in the three-phase voltages of the supply (see **B** below).
   - A hardware fault relating to current feedback was detected on the control board.

If the cause of the Autotune failure can be determined and rectified then do so and simply repeat the Autotune process.

MMI Menu Map

1 SETUP PARAMETERS

2 CURRENT LOOP

- MAIN CURR.LIMIT
- PROP. GAIN
- INT. GAIN
- DISCONTINUOUS
- I DMD. ISOLATE

MMI Menu Map

1 SETUP PARAMETERS

2 FIELD CONTROL

- FIELD ENABLE

MMI Menu Map

1 DIAGNOSTICS

- CURRENT FEEDBACK

A. If a very high motor discontinuous current boundary was the cause of failure, then the discontinuous-region manual tuning process needs to be applied as follows:

1. Set the DISCONTINUOUS parameter to 0, which selects adaptive current control off. When operating in this mode, disable the Missing Pulse alarm, since it is normally masked in the discontinuous region, and it will otherwise give spurious trips at low currents.
2. Set PROP. GAIN to a low level (typically 1), since it is ineffectual in the discontinuous current operating region.
3. Set the INT. GAIN to a moderate level (typically 10), sufficient to give fast response throughout the discontinuous current region.

B. If imbalance in the three-phase voltages of the supply is the cause of failure then the PI-control manual tuning process needs to be applied as follows:

1. Set FIELD ENABLE to Disabled and clamp the motor shaft, to prevent rotation.
2. Attach an oscilloscope to the control board armature current monitor test-point (test point IA [see page 5-5], scaled for 1.1V = 100% rated armature current, +ve = reverse bridge, -ve = forward bridge). The scaled armature current value can also be seen in the CURRENT FEEDBACK diagnostic.
3. Run the drive with a positive speed demand, gradually increasing MAIN CURR. LIMIT until the armature current pulses are seen to just join up. At this point, enter the value of CURRENT FEEDBACK into the DISCONTINUOUS parameter.
4. Enable the I DMD. ISOLATE parameter (or supply 24V to terminal C8). Use a toggling square-wave (< 20Hz) on the direct demand input (terminal A3) to generate current steps above the discontinuous region. Alternately increase PROP. GAIN and INT. GAIN, as far as possible, until the current loop response is correct (see Tuning Hints below).

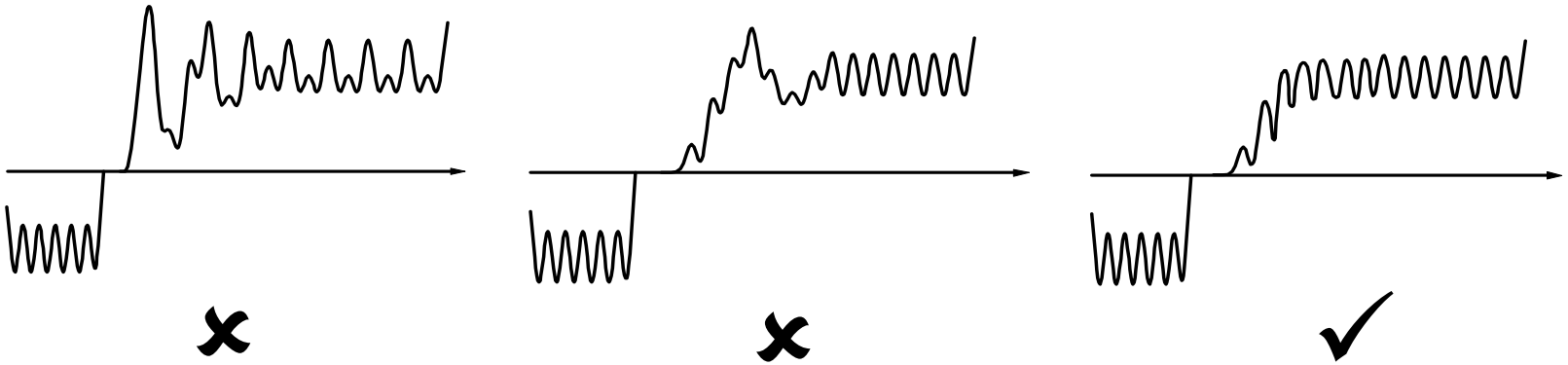

Current Loop controls incorrectly set. Rapid alternating oscillation = P gain too high

Current Loop controls incorrectly set. Slower oscillatory response = I gain too high

Current Loop controls correctly set.

Tuning Hints

If the P gain (PROP.GAIN) is too high then the response will exhibit a rapid oscillation, that alternates on consecutive current pulses.

If the I gain (INT. GAIN) is too high then the result will be a slower oscillatory response (under-damped), with a period of multiple pulses.

If the I gain (INT. GAIN) is too low then the response will exhibit a long settling tail.

Diagnostics

The diagnostic point for "real" armature current is the first (left-hand side) test point below the calibration panel. This will give 1.1V average for 100% current. It will also give the operating bridge, i.e. it will be negative for the Master bridge (positive current demand) and positive for the Slave bridge (negative current demand).

Current Demand Rate Limit (di/dt)

Access to the di/dt limit is currently reserved for Parker SSD Drives personnel only in the Reserved Menu.

This is a limit imposed on the rate of change of the current demand. It is to be used for motors with commutation limitations, mechanical systems that cannot absorb rapid torque transients and also as a means of limiting current overshoot for large current swings (e.g. 0 ➠ 200%). The default value is set at 35% (i.e. maximum allowable change is 35% of FLC in 1/6 mains cycle) which has no practical effect on the current response between 0 and 100%.

Speed Loop

The speed loop accepts a demand from either an outside loop (i.e. position loop) or directly from the plant and forms the error signal which is the difference between demand and feedback. The error signal is fed into a Proportional + Integral compensator which produces the output of the speed loop, i.e. the current demand signal.

The integral gain is translated into a Time Constant (secs) in the MMI which defines more clearly the function of the compensator against a certain load time constant.

Speed Loop Synchronised with Current Loop

The proportional part of the P+I algorithm is executed immediately before each run of the current loop, thus ensuring minimum time lag and therefore maximum bandwidth.

Combined Analog Tacho/Encoder Feedback

By using the analog tacho feedback on the Proportional part of the P + I algorithm and the encoder feedback on the Integral part (using similar principle as in the current loop), the Drive combines maximum transient response with the increased steady-state accuracy of the digital feedback. Please refer to Parker SSD Drives Engineering Department for assistance in the use of this feature.

Field Control

Set-Up Notes

MMI Menu Map

1 CONFIGURE DRIVE
- AUTOTUNE

Use the field AUTOTUNE facility to tune the field current control loop.

Initial Conditions

1. Main contactor open, i.e. no Start/Run signal at terminal C3.
2. Set the AUTOTUNE parameter to OFF.
3. Program Stop (terminal B8) and Coast Stop (terminal B9) should be high, i.e. 24V.
4. The motor should be stationary.

Caution

Never perform a field autotune if the motor is turning above base speed, since this will generate armature voltages that can overvoltage the armature ciruit.

Performing an Autotune

1. Set the AUTOTUNE parameter to FIELD.
2. Close the main contactor, i.e. Start/run signal to terminal C3.
3. Energise the Enable terminal (C5).

The Autotune sequence is initiated. When complete (after approximately 5 seconds), the main contactor is opened signalling the end of the sequence and the AUTOTUNE parameter is reset to OFF.

4. Perform a PARAMETER SAVE now. Refer to Chapter 6: "The Keypad - Saving Your Application".

MMI Menu Map

1 SETUP PARAMETERS

2 FIELD CONTROL

3 FLD.CURRENT VARS
- SETPOINT
- PROP. GAIN
- INT. GAIN
- >> FLD.WEAK VARS

Autotune Failed?

The AUTOTUNE ERROR message may result if:

- The field terminals are open-circuit or short-circuit.
- More than 180% or less than 20% field voltage is required to drive the current configured in the FIELD CURRENT parameter.
- The natural field time-constant is greater than 5 seconds.

In these cases, a manual tuning process will be required, much like the manual tuning of the armature current loop. With manual tuning, one convenient method of producing field current demand steps is to set the field demand (SETPOINT) to 50% and then use the drive enable to move to and from the 'quench' and 'standby' modes to create transients. Monitor the field current at control board test-point IF, scaled 4V = 100% rated field current.

Current Control

The field current loop can accept a demand directly from the plant and/or an outside field weakening loop and forms the error signal which is the difference between demand and feedback. The error signal is fed into a P + I compensator which produces the output of the field loop, i.e. the field firing angle signal.

The firing angle signal is translated into a certain time delay from the mains zero cross point (obtained via the same Phase-Lock-Loop as for the armature) and this results into a firing command being issued to the field bridge every 1/2 of a mains cycle in steady-state.

Voltage Control

This offers the facility of an open-loop voltage control for motors which do not provide in the nameplate the field current rating. The field voltage is controlled by the specified FLD. VOLTS RATIO which defaults to 90.0%. This is the maximum dc Volts that can be obtained for a given ac RMS input in a single-phase rectifier, i.e. 370V dc for 415V ac supply. The specified ratio determines directly the firing angle at which the controller operates and therefore the thermal effects on the field resistance as well as mains voltage variations are not compensated for. It is also worth noting that in this mode the field overcurrent alarm is not active (since there is no current scaling) and therefore this mode is not recommended for use with supplies much greater than the field voltage rating.

Field Weakening

Motor field weakening is used to extend the speed region of the motor above its base speed (the motor speed resulting at rated armature voltage, rated armature current and rated field current), in a constant power mode of operation (motor torque reducing with increasing speed).

Note that the motor should be rated for field-weakened operation, in terms of rotational speed and reduced field current, before utilising this mode.

The drive includes a field weakening loop that, above base speed, can control the field current demand to the correct level required to maintain motor back-EMF at a pre-defined level.

NOTE **Field weakening is not possible when running with Armature Volts feedback. Although field weakening can be "Enabled" in this instance, a software interlock clamps the field demand at 100% and will not allow the field weakening to reduce it.**

MMI Menu Map

1 SETUP PARAMETERS
2 FIELD CONTROL
3 FLD.CURRENT VARS
4 FLD.WEAK VARS
- FLD. WEAK ENABLE
- EMF LEAD
- EMF LAG
- EMF GAIN
- MIN FLD.CURRENT
- MAX VOLTS
- BEMF FBK LEAD
- BEMF FBK LAG

When the back-EMF measurement is higher than the MAX VOLTS setting (default 100%) the excess voltage is presented to the field weakening gain-limited PI controller as an error, and this controller reduces the field current demand accordingly.

The gain-limited controller is tuned as follows:

1. Ensure that the armature current, speed and field current loops are correctly tuned.
2. Enable field weakening control (FLD. WEAK ENABLE = ENABLE), with analogue tachogenerator, encoder or microtach speed feedback, correctly installed and configured for extended speed operation.
3. Run the drive and slowly increase the speed demand so that the field is being weakened by the gain-limited PI controller. Change the MAX VOLTS parameter down and up by 10% to generate field current transients.
4. Alternately increase the P gain (using the dc-gain parameter EMF GAIN) and reduce the integral time-constant (parameter EMF LEAD) until the loop is correctly tuned (see the Current Loop "Tuning Hints" above).

It is the over-voltage of the back-EMF that provides the error which drives this controller to weaken the field, and the over-voltage occurring during ramp through base speed is dependent on the rate of ramp. If the over-voltage is excessive, then it can be reduced most simply by switching to the ADVANCED field weakening mode. In the STANDARD mode, provide advanced notice of the overvoltage, in order to reduce it, by employing the lag/lead filter applied to the back-emf measurement. This filter is disabled by default through its equal lag and lead time-constant settings, increase the lead time-constant to provide advance notice of weakening to the controller.

Notes on field weakening controller usage:

1. **The use of the back-EMF filter should be limited to 3:1 ratio of lag to lead time-constants, and the field current loop and field weakening controller may need to be de-tuned, in order to maintain overall loop stability.**
2. **The gain-limit of the PI controller may also be adjusted in order to optimise the balance between transient and static back-EMF over-voltage. Lower lag time-constants and lower dc-gains result in more static back-EMF over-voltage, but allow for more back-EMF filter advance during speed ramps. The ratio of lag to lead time-constants should be typically maintained above 10 to avoid significant dc over-voltage on the back-EMF.**

ADVANCED Mode

The ADVANCED mode of the field weakener offers the following advantages over the STANDARD mode.

1. **A feedforward control is applied in addition to the gain-capped PI controller.** This term, which compares the actual speed feedback to the calculated base speed, estimates the required field weakening. The use of this control term significantly reduces the overvoltage on transition through base speed, prior to the application of any lead-lag compensation. Transistions through base speed can be more rapid without overvoltage as a result. In addition, false weakening of the field is eliminated for speed transients just below base speed, if the lead-lag back-emf filter is left disabled.
2. **The back-emf control loop is gain compensated for reducing field level.** Motor back-emf is related directly to the motor speed, and to the motor flux level. As a result the transfer gain from field current to back-emf is directly related to motor speed. An adaptive gain element is included in the ADVANCED mode that increases back-emf loop gain below full speed, and this allows improved control performance at the field weakening boundary whilst maintaining stability at full speed.
3. **The speed control loop is gain compensated for reducing field level.** Motor torque is related directly to both armature current and motor flux level. An adaptive gain element is included in the ADVANCED mode that increases speed loop gain below full field, and this maintains speed control performance into the field weakened operating region. Note that the lag-lead back-emf filter can still be applied in the ADVANCED mode to further improve voltage control during rapid excursions into field weakening.

MMI Menu Map

1 SETUP PARAMETERS

2 FIELD CONTROL

- FLD. QUENCH DELAY
- FLD. QUENCH MODE

Standby Field

When the armature current gets quenched, a timer starts timing-out and after a certain delay (FLD. QUENCH DELAY) it will either quench the field totally (FLD. QUENCH MODE = QUENCH) or will reduce it to 50% of the current or voltage setpoint (FIELD QUECH MODE = STANDBY). This applies to both current and voltage modes.

Chapter 6

The Keypad

This chapter details the menus, control keys and keypad indications.

Connecting the 6911 Keypad 6-1
Control Key Definitions 6-2
Keys for Programming the Drive 6-2
Keys for Operating the Drive Locally 6-3
Indications 6-3
Keypad Alarm Messages 6-3
Keypad LEDs 6-4
The Menu System 6-5
The Local Menu 6-6
The L/R Key 6-6
The PROG Key 6-6
Navigating the Menu System 6-7
Changing a Parameter Value 6-7
The Menu System Map 6-8
The Keypad Menus 6-10
DIAGNOSTICS 6-10
SETUP PARAMETERS 6-15
PASSWORD 6-16
ALARM STATUS 6-17
MENUS 6-17
SERIAL LINKS 6-18
SYSTEM 6-18
PARAMETER SAVE 6-18
CONFIGURE DRIVE 6-19
FUNCTION BLOCKS 6-20
Menu Shortcuts and Special Key Combinations.... 6-21
Quick Tag Information 6-21
Changing the Stack Size (3-button reset) 6-21
Resetting to Factory Defaults (2-button reset) 6-22
Cloning Feature 6-22
How to Save, Restore and Copy your Settings 6-23
Saving Your Application 6-23
Restoring Saved Settings 6-24
Copying an Application 6-24

Connecting the 6911 Keypad

The Keypad is a plug-in MMI (Man-Machine Interface) option that allows full use of the drive's features.

It provides local control of the drive, monitoring, and complete access for application programming.

Insert the Keypad into the front of the drive (replacing the blank cover and plugging into the RS232 programming port); or mount it up to 3 metres away using the optional panel mounting kit with connecting lead.

Refer to Chapter 3: "Installing the Drive" - Remote Mounting the Keypad.

On power-up, a calibration message is displayed. This is quickly replaced by a default Welcome screen showing the product description and
Product Code.

The Welcome screen is at the top of the menu system.

The drive can operate in one of two modes:

Remote Control Mode: Allowing complete access for application programming

Local Control Mode: Providing local control and monitoring of the drive

Local control keys are inactive when Remote control mode is selected and vice versa, with one exception; the **L/R** key toggles Local or Remote control modes and so is always operative.

The drive always initialises in Remote control mode, and with the Local control keys inactive, it is unlikely that the motor could be started accidentally.

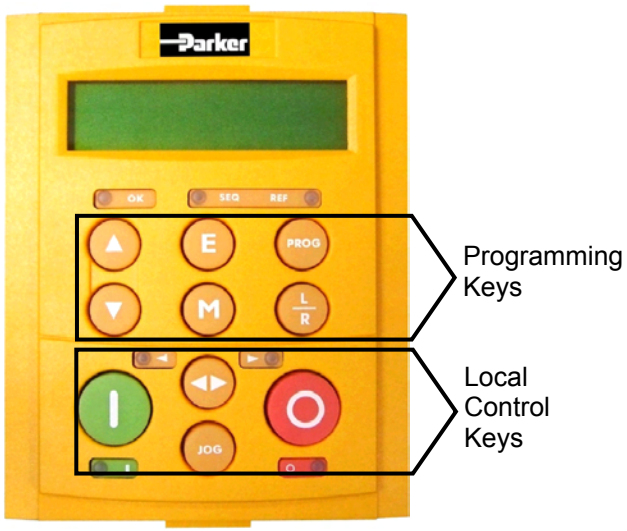

Figure 6-1 6911 Keypad

Control Key Definitions

Keys for Programming the Drive

NOTE **Refer to "Navigating the Menu System", page 6-7 for a quick-start to using the menu.**

UP	*Navigation* - Moves upwards through the list of parameters. *Parameter* - Increments the value of the displayed parameter. *Command Acknowledge* - Confirms action when in a command menu.
DOWN	*Navigation* - Moves downwards through the list of parameters. *Parameter* - Decrements the value of the displayed parameter.
ESCAPE E	*Navigation* - Displays the previous level's Menu. *Parameter* - Returns to the parameter list. *Trip Acknowledge* - Acknowledges displayed Trip or Error message.
MENU M	*Navigation* - Displays the next Menu level, or the first parameter of the current Menu. *Parameter* - Holding M down when a parameter is displayed shows that parameter's Tag No. Repeated pressing at a writable parameter moves a cursor across the value to allow rapid increment/decrement of the parameter value.
PROG PROG	*Navigation* - When in Local mode, displays the previous MMI menu whilst remaining in Local mode enabling changes to be made to parameters not available in Local menu. The key has no function in Remote mode.
LOCAL/ REMOTE L/R	*Control* - Toggles between Remote and Local Control Modes for both Start/Stop (Seq) and Speed Control (Ref). When toggling, the display automatically goes to the relevant SETPOINT screen, and the SETPOINT (LOCAL) screen will have the ▲ and ▼ keys enabled to alter the setpoint.

Keys for Operating the Drive Locally

FORWARD/ REVERSE	*Control* - Changes the direction of motor rotation when in Local mode, indicated by the display. Selects between two jog speeds when in Jog mode. This key has no function in Remote mode.
JOG	*Control* - Runs the motor at a speed determined by the JOG SPEED 1 parameter. When the key is released, the Drive returns to "stopped". Only operates when the Drive is "stopped" and in Local mode. This key has no function in Remote mode.
RUN	*Control* - Runs the motor at a speed determined by the LOCAL SETPOINT. *Trip Reset* - Resets any trips and then runs the motor as above. Only operates when the Drive is in Local mode.
STOP/RESET	*Control* - Stops the motor. Only operates when the Drive is in Local mode. *Trip Reset* - Resets any trips and clears displayed message if trip is no longer active.

Indications

Keypad Alarm Messages

An alarm message will be displayed on the MMI when the unit is tripped.

- The Drive has tripped.
  The top line indicates a trip has occurred while the bottom line gives the reason for the trip. See example opposite.

```
*** ALARM ***
3 PHASE FAILED
```

Acknowledge the trip message by pressing the **E** key. Press the **STOP/RESET** key to restore the Health LED.

Refer to Chapter 7: "Trips and Fault Finding" for trip messages and reasons.

Keypad LEDs

OFF
FLASH
ON

There are seven LEDs that indicate the status of the Drive. Each LED is considered to operate in three different ways:

The LEDs are labelled HEALTH, RUN, STOP, FWD, REV, and LOCAL (as SEQ and REF). Combinations of these LEDs have the following meanings:

HEALTH (OK)	RUN	STOP	Drive State
FLASH	FLASH	FLASH	Re-Configuration
FLASH	OFF	ON	Tripped
ON	OFF	ON	Stopped
ON	OFF	FLASH	Stopping
ON	FLASH	OFF	Running with zero reference
ON	ON	OFF	Running
ON	FLASH	FLASH	Autotuning

FWD	REV	Forward / Reverse State
ON	OFF	Requested direction and actual direction are forward
OFF	ON	Requested direction and actual direction are reverse
FLASH	OFF	Requested direction is forward but actual direction is reverse
OFF	FLASH	Requested direction is reverse but actual direction is forward

LOCAL SEQ	LOCAL REF	Local / Remote Mode
OFF	OFF	Start/Stop (Seq) and Speed Control (Ref) are controlled from the terminals
ON	ON	Start/Stop (Seq) and Speed Control (Ref) are controlled using the Keypad keys

The Menu System

The menu system is divided into a `tree' structure with 9 “MENU LEVEL” main menus.

Consider these main menus to be at Menu Level 1 (refer to the The Menu System Map, page 6-8). Parameters contained in Menu Level 1 are the most frequently used, as you descend the menu levels the parameters are less frequently used.

The Keypad has selectable “viewing levels” which can restrict the view of the Remote menu system, refer to "Selecting a Menu Viewing Level", page 6-17.

Below is a simple description of the main menus:

- **DIAGNOSTICS**: a view of important diagnostic parameters.
- **SETUP PARAMETERS**: contains all the function block parameters for setting-up the Drive.
- **PASSWORD**: contains all the Password parameters required for security.
- **ALARM STATUS**: a view of the alarm diagnostic parameters contained in the FUNCTION BLOCKS menu.
- **MENUS**: allows full or reduced menu displays on the Keypad, and selects the display language.
- **SERIAL LINKS**: contains all the parameters for external communications set-up and operation.
- **SYSTEM**: contains all the parameters for I/O configuration.
- **PARAMETER SAVE**: save the application/parameters.
- **CONFIGURE DRIVE**: a view of the important parameters used when setting-up the drive.
- **FUNCTION BLOCKS**: a view of all available function blocks, as seen in the Configuration Tool.

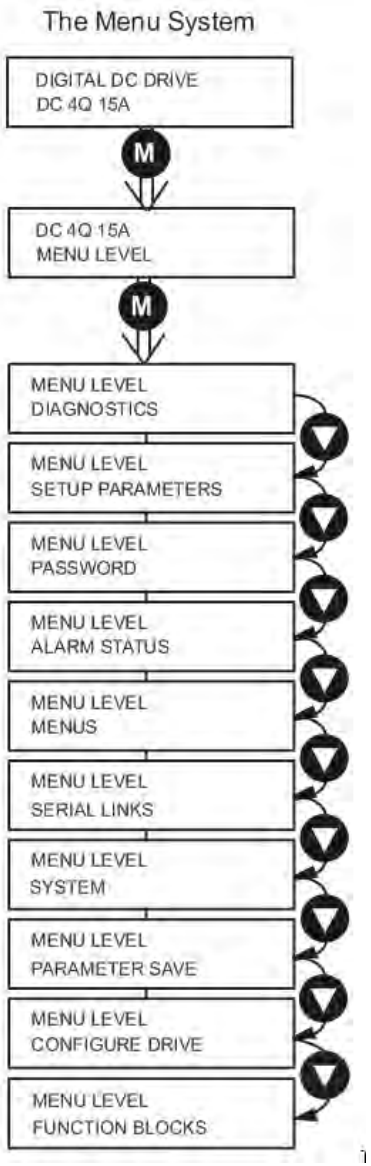

Figure 6-2 The Menu System showing Main Menus and Key Presses

The Local Menu

There is also a separate Local menu which provides Local Setpoint information. This menu can be accessed from anywhere in the Menu System by pressing the **L/R** key. Holding the **M** key down in the Local menu will display additional Feedback information. A toggle to the Local menu displays whichever is in force, Forward or Reverse, previously selected by the **FWD/REV** key.

The L/R Key

The **L/R** key (Local/Remote) only operates when the motor is stopped. It toggles the drive between Local or Remote control and an appropriate menu on the Keypad is displayed; either a Local menu when in Local control, or a main programming menu from the Menu System when in Remote control.

When in Local control, the Local LEDs, SEQ and REF, are illuminated and the RUN, STOP, JOG, FORWARD/REVERSE, UP and DOWN local control keys can be used to control the motor speed and direction.

Pressing the **L/R** key when in Local control mode selects Remote control mode and returns you to your previous menu in the Menu System.

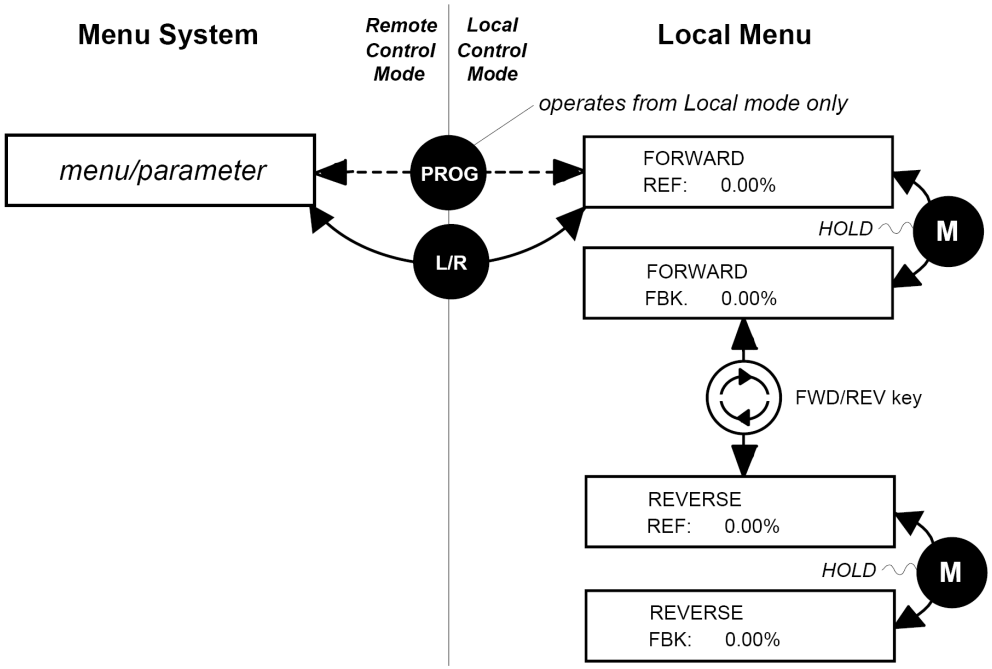

Figure 6-3
Viewing the Local Menu

The PROG Key

The **PROG** key only operates when in Local control mode. It toggles the display between the Local menu and the main Menu System but the drive remains in Local control. Thus, the **PROG** key allows you to make changes to parameters normally available in Remote control mode whilst remaining in Local mode operation.

HINT: When operating the drive locally, it is quite useful to have a relevant parameter selected in the main Menu System for easy access.

Navigating the Menu System

The Menu System can be thought of as a map which is navigated using the four keys shown opposite.

- *Keys **E** and **M** navigate through the menu levels.*
- *The up (▲) and down (▼) keys scroll through the Menu and Parameter lists.*

Menus can contain other menus at a lower level in the tree structure, parameters, or a mixture of both.

The keys are used as above to select a parameter (a parameter has a selection (i.e. ON/OFF) or a value displayed on the bottom line).

HINT: Remember that because the Menu and Parameter lists are looped, the ▲ key can quickly move you to the last Menu or Parameter in the loop. The keys will repeat if you hold them down. This is an easy way to step through and view a menu's contents.

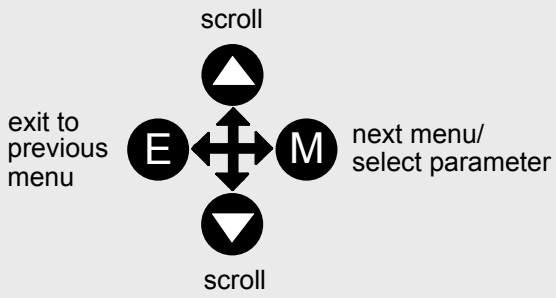

NAVIGATING THE MENU

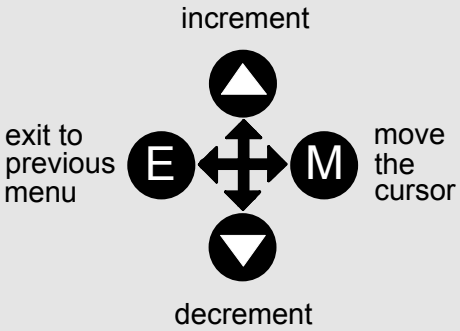

EDITING PARAMETERS

Changing a Parameter Value

With the Parameter you want on view, three of the keys now perform different functions:

- *Change a selection (i.e. ON/OFF) using the up (▲) and down (▼) keys.*
- *Change a value as follows:*

  The up (▲) and down (▼) keys increment/decrement the value at a rate determined by the right hand character of the value, indicated by the appearance of a cursor.

  - *If the cursor is positioned as 100.**0** ,then the value will change by tenths of a unit*
  - *If the cursor is positioned as 10**0**.0, then the value will change in whole units, etc.*

The up (▲) and down (▼) keys will repeat if you hold them down and, at a preset point, the cursor will progressively move one character to the left and increment/decrement the value at an increased rate.

*Alternatively, you can move the cursor manually by pressing the **M** key. Repeated pressing moves the cursor right to left along the value.*

*The cursor times-out after approximately half a second, so use the **M** key and up (▲) and down (▼) keys promptly once the cursor is in position.*

RAMP ACCEL TIME
10.0 SECS

A Parameter showing a cursor under the value

NOTE **A cursor appears under all numerical values except for parameters in the Diagnostics and Alarm Status menus whose values provide information only.**

The Menu System Map

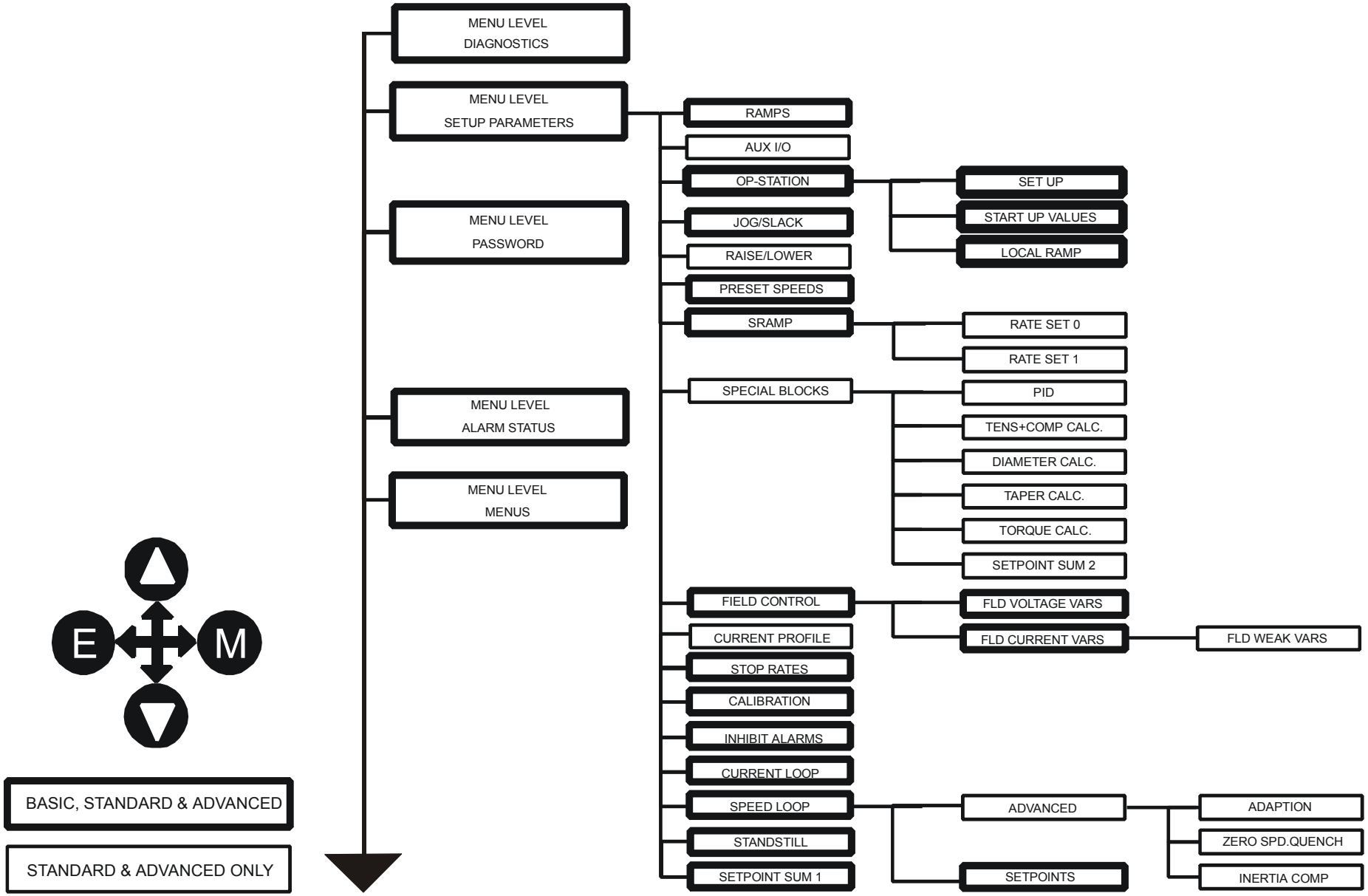

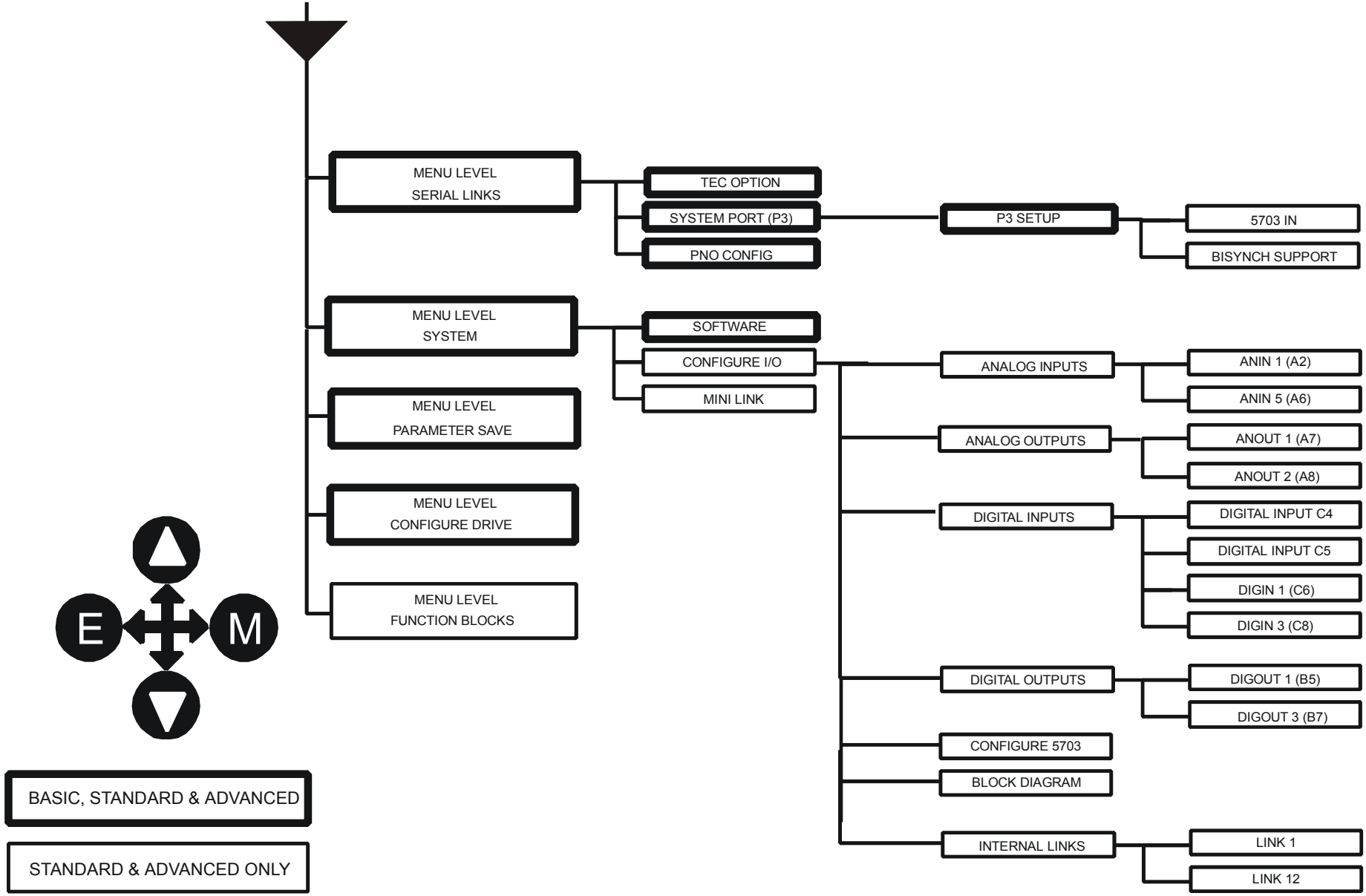
MENU LEVEL
SERIAL LINKS
TEC OPTION
SYSTEM PORT (P3)
PNO CONFIG
P3 SETUP
5703 IN
BISYNCH SUPPORT
MENU LEVEL
SYSTEM
SOFTWARE
CONFIGURE I/O
MINI LINK
ANALOG INPUTS
ANIN 1 (A2)
ANIN 5 (A6)
ANALOG OUTPUTS
ANOUT 1 (A7)
ANOUT 2 (A8)
DIGITAL INPUTS
DIGITAL INPUT C4
DIGITAL INPUT C5
DIGIN 1 (C6)
DIGIN 3 (C8)
DIGITAL OUTPUTS
DIGOUT 1 (B5)
DIGOUT 3 (B7)
CONFIGURE 5703
BLOCK DIAGRAM
INTERNAL LINKS
LINK 1
LINK 12
MENU LEVEL
PARAMETER SAVE
MENU LEVEL
CONFIGURE DRIVE
MENU LEVEL
FUNCTION BLOCKS
E
M
BASIC, STANDARD & ADVANCED
STANDARD & ADVANCED ONLY

The Keypad Menus

MMI Menu Map

1 DIAGNOSTICS
- SPEED DEMAND
- SPEED FEEDBACK
- SPEED ERROR FILT
- SPEED LOOP O/P
- CURRENT DEMAND
- CURRENT FEEDBACK
- CURRENT FBK.AMPS
- IaFbk UNFILTERED
- IaDmd UNFILTERED
- POS. I CLAMP
- NEG. I CLAMP
- ACTUAL POS I LIM
- ACTUAL NEG I LIM
- INVERSE TIME O/P
- AT CURRENT LIMIT
- AT ZERO SPEED
- AT ZERO SETPOINT
- AT STANDSTILL
- RAMPING
- PROGRAM STOP
- COAST STOP
- DRIVE START
- DRIVE ENABLE
- OPERATING MODE
- FIELD ENABLED
- FIELD DEMAND
- FIELD I FBK.
- FIELD I FBK.AMPS
- UNFIL.FIELD FBK
- FLD.FIRING ANGLE
- ANIN 1 (A2)
- ANIN 2 (A3)
- ANIN 3 (A4)
- ANIN 4 (A5)
- ANIN 5 (A6)

DIAGNOSTICS

The DIAGNOSTICS Menu table describes all the parameters in the MMI's DIAGNOSTICS menu. These parameters are "read-only" and are very useful for tracing configuration problems. The list is shown in MMI order, and the parameter names are as displayed by the 6901 Keypad and the DSE Configuration Tool.

DIAGNOSTICS (MMI only)

Parameter	Tag	Range	SETUP PARAMETERS Function Blocks
SPEED DEMAND Speed loop total setpoint after the ramp-to-zero block.	**89**	**—.xx %**	*Refer to* ***SPEED LOOP***
SPEED FEEDBACK Speed loop feedback.	**207**	**—.xx %**	*Refer to* ***FEEDBACKS***
SPEED ERROR FILT Speed loop error.	**297**	**—.xx %**	*Refer to* ***SPEED LOOP***
SPEED LOOP O/P Output from speed loop PI.	**356**	**—.xx %**	*Refer to* ***SPEED LOOP***
CURRENT DEMAND Current loop demand (speed error PI output or external current demand clamped by all the current limits).	**299**	**—.xx %**	*Refer to* ***CURRENT LOOP***
CURRENT FEEDBACK Scaled and filtered current feedback.	**298**	**—.xx %**	*Refer to* ***FEEDBACKS***
CURRENT FBK. AMPS Scaled and filtered armature current in Amps.	**538**	**—.xx AMPS**	*Refer to* ***CURRENT LOOP***
IaFbk UNFILTERED Scaled current feedback (unfiltered).	**65**	**—.xx %**	*Refer to* ***CURRENT LOOP***
IaDmd UNFILTERED Scaled current demand (unfiltered).	**66**	**—.xx %**	*Refer to* ***CURRENT LOOP***
POS. I CLAMP Positive current clamp.	**87**	**—.x % (h)**	*Refer to* ***CURRENT LOOP***
NEG. I CLAMP Negative current clamp.	**88**	**—.x % (h)**	*Refer to* ***CURRENT LOOP***

MMI Menu Map cont.

1 DIAGNOSTICS
- ANOUT 1 (A7)
- ANOUT 2 (A8)
- START (C3)
- DIGITAL INPUT C4
- DIGITAL INPUT C5
- DIGIN 1 (C6)
- DIGIN 2 (C7)
- DIGIN 3 (C8)
- DIGOUT 1 (B5)
- DIGOUT 2 (B6)
- DIGOUT 3 (B7)
- RAISE/LOWER O/P
- PID OUTPUT
- PID CLAMPED
- PID ERROR
- SPT SUM OUTPUT
- RAMP OUTPUT
- PRESET O/P
- SRAMP OUTPUT
- OUTPUT FPM
- SPEED SETPOINT
- TERMINAL VOLTS
- BACK EMF
- ARM VOLTS FBK
- TACH INPUT
- UNFIL.TACH INPUT
- ENCODER
- UNFIL.ENCODER
- UNFIL.SPD.FBK
- UNFIL.SPD.ERROR
- CONTACTOR CLOSED
- HEALTH LED
- READY
- DRIVE RUNNING
- SYSTEM RESET

DIAGNOSTICS (MMI only)

Parameter	Tag	Range	SETUP PARAMETERS Function Blocks
ACTUAL POS I LIM Overall positive current limit value.	**67**	**—.x % (h)**	*Refer to **CURRENT LOOP***
ACTUAL NEG I LIM Overall negative current limit value.	**61**	**—.x % (h)**	*Refer to **CURRENT LOOP***
INVERSE TIME O/P Inverse time clamp output level.	**203**	**—.xx %**	*Refer to **INVERSE TIME***
AT CURRENT LIMIT Current demand is being restrained by the overall current clamp.	**42**	**FALSE / TRUE**	*Refer to **CURRENT LOOP***
AT ZERO SPEED At zero speed feedback.	**77**	**FALSE / TRUE**	*Refer to **STANDSTILL***
AT ZERO SETPOINT At zero speed demand.	**78**	**FALSE / TRUE**	*Refer to **STANDSTILL***
AT STANDSTILL AT ZERO SPEED and AT ZERO SETPOINT.	**79**	**FALSE / TRUE**	*Refer to **STANDSTILL***
RAMPING The SETPOINT ramp function block is limiting the rate of change of Speed Setpoint.	**113**	**FALSE / TRUE**	*Refer to **RAMPS***
PROGRAM STOP State of program stop (Terminal B8). When B8 is at 24V, then PROGRAM STOP is FALSE.	**80**	**FALSE / TRUE**	*Refer to **SELECT***
COAST STOP State of coast stop (Terminal B9). When B9 is at 24V, then COAST STOP is FALSE.	**525**	**FALSE / TRUE**	*Refer to **SELECT***
DRIVE START Controller start/run command.	**82**	**ON / OFF**	*Refer to **SELECT***
DRIVE ENABLE Drive speed and current loop are enabled/quenched.	**84**	**ENABLED / DISABLED**	*Refer to **SELECT***

DIAGNOSTICS (MMI only)

Parameter	Tag	Range	SETUP PARAMETERS Function Blocks
OPERATING MODE	**212**	**0 to 7**	
Indicates whether the drive is in RUN, JOG 1....STOP etc. 0 : STOP 1 : STOP 2 : JOG SP. 1 3 : JOG SP. 2 4 : RUN 5 : TAKE UP SP. 1 6 : TAKE UP SP. 2 7 : CRAWL			*Refer to **JOG/SLACK***
FIELD ENABLED	**169**	**ENABLED / DISABLED**	
Drive field loop is enabled/quenched.			*Refer to **FIELD CONTROL***
FIELD DEMAND	**183**	**—.xx %**	
The meaning of field demand depends upon which mode of field control is in force; in current control FIELD DEMAND is the current setpoint to the field loop, in voltage mode FIELD DEMAND is the voltage ratio to the field controller.			*Refer to **FIELD CONTROL***
FIELD I FBK.	**300**	**—.xx %**	
Scaled and filtered field current feedback.			*Refer to **FIELD CONTROL***
FIELD I FBK.AMPS	**539**	**—.x AMPS**	
Scaled and filtered field current feedback in Amps.			*Refer to **FIELD CONTROL***
UNFIL.FIELD FBK	**181**	**—.xx %**	
Scaled field current (unfiltered).			*Refer to **FEEDBACKS***
FLD.FIRING ANGLE	**184**	**—.xx DEG**	
Field firing angle in degrees: 155 degrees is the value for back stop (min field) and 5 degrees is the value for front stop (max field).			*Refer to **FIELD CONTROL***
ANIN 1 (A2)	**50**	**—.xx VOLTS**	
Speed setpoint no. 1.			*Refer to **ANALOG INPUTS***
ANIN 2 (A3)	**51**	**—.xx VOLTS**	
Hardwired. Speed setpoint no. 2 or current demand if C8 = ON.			*Refer to **ANALOG INPUTS***
ANIN 3 (A4)	**52**	**—.xx VOLTS**	
Speed setpoint no. 3 (ramped).			*Refer to **ANALOG INPUTS***

DIAGNOSTICS (MMI only)

Parameter	Tag	Range	SETUP PARAMETERS Function Blocks
ANIN 4 (A5)	**53**	**—.xx VOLTS**	
Speed setpoint no. 4 or negative current clamp if C6 = ON.			*Refer to **ANALOG INPUTS***
ANIN 5 (A6)	**54**	**—.xx VOLTS**	
Main current limit or positive current clamp if C6 = ON.			*Refer to **ANALOG INPUTS***
ANOUT 1 (A7)	**55**	**—.xx VOLTS**	
Scaled speed feedback.			*Refer to **ANALOG OUTPUTS***
ANOUT 2 (A8)	**56**	**—.xx VOLTS**	
Total speed setpoint.			*Refer to **ANALOG OUTPUTS***
START (C3)	**68**	**ON / OFF**	
Start/Run terminal.			*Refer to **SEQUENCING***
DIGITAL INPUT C4	**69**	**ON / OFF**	
Jog/Take-up Slack terminal.			*Refer to **DIGITAL INPUTS***
DIGITAL INPUT C5	**70**	**ON / OFF**	
Electronic enable/disable (quench) terminal (ON = Enabled).			*Refer to **DIGITAL INPUTS***
DIGIN 1 (C6)	**71**	**ON / OFF**	
Symmetrical current clamps/Asymmetrical (bipolar) current clamps (ON = Bipolar).			*Refer to **DIGITAL INPUTS***
DIGIN 2 (C7)	**72**	**ON / OFF**	
Ramp hold input (ON = Hold).			*Refer to **DIGITAL INPUTS***
DIGIN 3 (C8)	**73**	**ON / OFF**	
Current demand isolate; giving speed or current mode of operation. (ON = Current mode).			*Refer to **DIGITAL INPUTS***
DIGOUT 1 (B5)	**74**	**ON / OFF**	
At zero speed.			*Refer to **DIGITAL OUTPUTS***
DIGOUT 2 (B6)	**75**	**ON / OFF**	
Drive healthy. Health is also displayed on the front panel LED, always ON when the start is low.			*Refer to **DIGITAL OUTPUTS***
DIGOUT 3 (B7)	**76**	**ON / OFF**	
Drive ready to run (all alarms healthy and mains synchronisation achieved).			*Refer to **DIGITAL OUTPUTS***
RAISE/LOWER O/P	**264**	**—.xx %**	
Value of the raise/lower ramp function.			*Refer to **RAISE/LOWER***

DIAGNOSTICS (MMI only)

Parameter	Tag	Range	SETUP PARAMETERS Function Blocks
PID OUTPUT	**417**	**—.xx %**	
Output of the PID function block.			*Refer to* ***PID***
PID CLAMPED	**416**	**FALSE / TRUE**	
Indicates the PID output has reached either the positive or negative limit.			*Refer to* ***PID***
PID ERROR	**415**	**—.xx %**	
Displays the difference between the setpoint (INPUT 1) and the feedback signal (INPUT 2) in the PID function block.			*Refer to* ***PID***
SPT SUM OUTPUT	**86**	**—.xx %**	
Setpoint summation output.			*Refer to* ***SETPOINT SUM 1***
RAMP OUTPUT	**85**	**—.xx %**	
Setpoint ramp output.			*Refer to* ***RAMPS***
PRESET O/P	**572**	**—.x %**	
Scales the selected preset input by MAX SPEED.			*Refer to* ***PRESET SPEEDS***
SRAMP OUTPUT	**589**	**—.x %**	
Diagnostic, ramp output.			*Refer to* ***SRAMP***
OUTPUT FPM	**593**	**—.x**	
Outputs the selected INPUT value.			*Refer to* ***PRESET SPEEDS***
SPEED SETPOINT	**63**	**—.xx %**	
Speed loop total setpoint including the ramp output before the ramp-to-zero function.			*Refer to* ***SPEED LOOP***
TERMINAL VOLTS	**57**	**—.x %**	
Scaled armature terminal volts.			*Refer to* ***CALIBRATION***
BACK EMF	**60**	**—.x %**	
Calculated motor back EMF including IR. compensation. (Armature Volts Feedback)			*Refer to* ***CALIBRATION***
ARM VOLTS FBK	**605**	**—. V**	
Back EMF scaled by NOM MOTOR VOLTS (CONFIGURE DRIVE function block).			*Refer to* ***FEEDBACKS***
TACH INPUT	**308**	**—.x %**	
Scaled analog tachogenerator feedback.			*Refer to* ***FEEDBACKS***
UNFIL.TACH INPUT	**58**	**—.x %**	
Analog tachogenerator feedback (unfiltered).			*Refer to* ***CALIBRATION***
ENCODER	**206**	**—. RPM**	
Encoder speed feedback in RPM.			*Refer to* ***ENCODER***

DIAGNOSTICS (MMI only)

Parameter	Tag	Range	SETUP PARAMETERS Function Blocks
UNFIL.ENCODER Encoder speed feedback in RPM (unfiltered).	**59**	**—. RPM**	*Refer to* ***ENCODER***
UNFIL.SPD.FBK Unfiltered speed feedback.	**62**	**—.xx %**	*Refer to* ***SPEED LOOP***
UNFIL.SPD.ERROR Unfiltered speed error.	**64**	**—.xx %**	*Refer to* ***SPEED LOOP***
CONTACTOR CLOSED Main contactor control signal.	**83**	**FALSE / TRUE**	*Refer to* ***SEQUENCING***
HEALTH LED State of Health LED on Keypad.	**122**	**FALSE / TRUE**	*Refer to* ***ALARMS***
READY The drive is ready to accept an enable signal.	**125**	**FALSE / TRUE**	*Refer to* ***SEQUENCING***
DRIVE RUNNING Drive is enabled and may make current when TRUE. A diagnostic for those parameters that can only be written to when the drive is stopped (parameters marked with Note 2 in the Parameter Specification Table).	**376**	**FALSE / TRUE**	*Refer to* ***SEQUENCING***
SYSTEM RESET Set for one cycle as the drive is enabled.	**374**	**FALSE / TRUE**	*Refer to* ***SEQUENCING***

SETUP PARAMETERS

Refer to Appendix D for parameter details. A parameter can be located by referring to the Parameter Specification Table: Tag Number Order.

The layout of this 590+ menu is shown by The Menu System Map on page 6-8.

PASSWORD

MMI Menu Map

1 PASSWORD
- ENTER PASSWORD
- CHANGE PASSWORD

When in force, the password prevents unauthorised parameter modification by making all parameters “read-only”. If you attempt to modify a password protected parameter, it will cause “PASSWORD ??” to flash on the display.

The password protection is activated/deactivated using the ENTER PASSWORD and CHANGE PASSWORD parameters:

Activated: ENTER PASSWORD and CHANGE PASSWORD values are different

Deactivated: ENTER PASSWORD and CHANGE PASSWORD values are the same

To Activate Password Protection

By default, the password feature is disabled, i.e. both the CHANGE PASSWORD and ENTER PASSWORD parameters have the same value: 0x0000.

To activate a password:

Enter any value other than the default value (0x0000) in the CHANGE PASSWORD parameter, for example 0x0002.

The ENTER PASSWORD parameter will now display this new password (e.g. 0x0002). Change the value in this parameter (to hide the password).

The password is now hidden, and CHANGE PASSWORD displays "****".

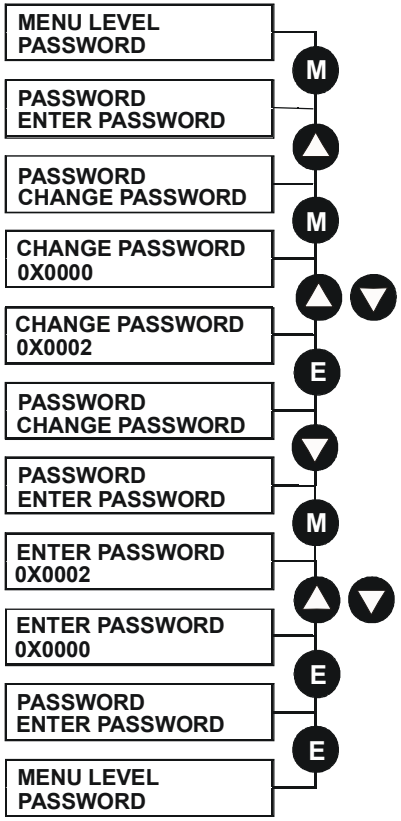

To Deactivate Password Protection

With password protection activated, you can no longer edit the CHANGE PASSWORD parameter until you deactivate the password protection (because the value is hidden by “****”).

To deactivate a password:

Enter the current password (e.g. 0x0002) in the ENTER PASSWORD parameter.

CHANGE PASSWORD will now display the current password.

Because the ENTER PASSWORD parameter value is always reset to 0x0000 when powering-up the drive, 0x0000 is the default value for the CHANGE PASSWORD parameter, i.e. by default, the two parameter values are the same and so password protection is disabled.

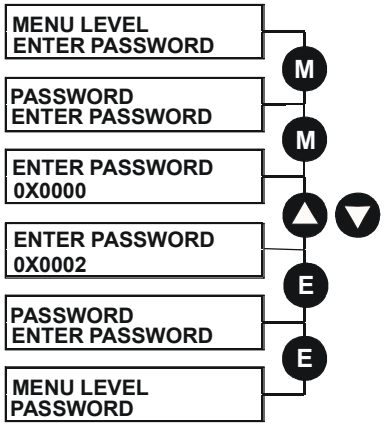

ALARM STATUS

Refer to Chapter 7: "Trips and Fault Finding" for a list of all the alarms.

MENUS

MMI Menu Map

1 MENUS
- VIEW LEVEL
- LANGUAGE

Selecting a Menu Viewing Level

For ease of operation the Keypad has three `viewing levels`: BASIC, STANDARD and ADVANCED. The setting for the viewing level decides how much of the menu system will be displayed.

Refer to the The Menu System Map, page 6-8 to see how the viewing level changes the displayed menu.

To change the viewing level, go to the MENUS menu. The VIEW LEVEL parameter in this menu selects the viewing level.

- Select BASIC to see a reduced selection of parameters to operate the drive
- Select STANDARD to see the "standard" set of parameters
- Select ADVANCED to see the full menu system - useful when programming

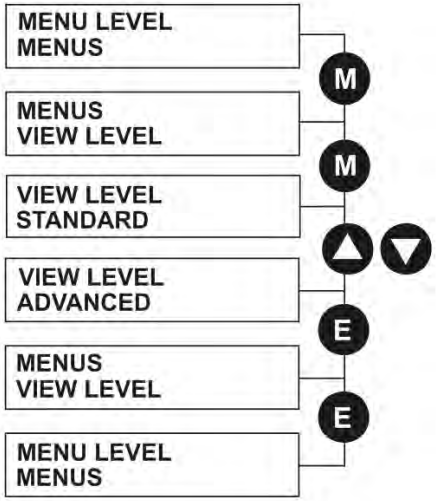

Selecting the Display Language

There is an option to select a different display language.

The choice of display language is selected by the LANGUAGE parameter in the MENUS menu. Remember to perform a PARAMETER SAVE if you need the new language to be saved on power-down.

ENGLISH is the default language and is permanently saved (in Read Only Memory).

A second language is loaded (typically French), however German, Italian and Spanish are available by contacting Parker SSD Drives. When a new language is downloaded it replaces the current second language.

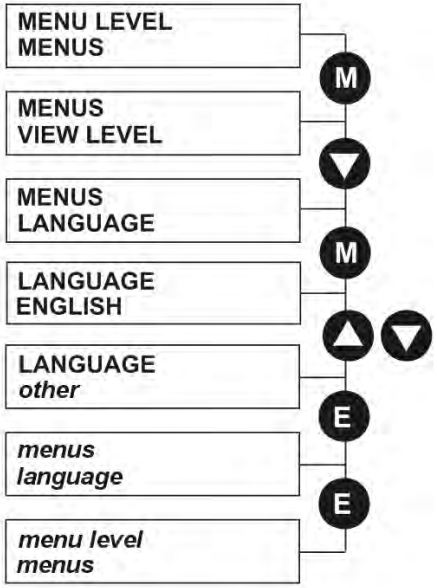

SERIAL LINKS

This menu contains 3 function blocks. These can be found in the SETUP PARAMETERS menu - refer to Appendix D: "Programming".

SERIAL LINKS

•_ TEC OPTION	refer to Appendix D:"Programming"
•_ SYSTEM PORT (P3)	refer to Appendix D:"Programming"
•_ PNO CONFIG	refer to Appendix D:"Programming"

SYSTEM

This menu contains 2 parameters and 3 function blocks. The function blocks can be found in the SETUP PARAMETERS menu - refer to Appendix D: "Programming".

SYSTEM

•_ SOFTWARE	see below
•_ CONFIGURE I/O	see below
•_ miniLINK	refer to Appendix D:"Programming" - miniLINK
•_ SAVE TO OP	refer to Appendix D:"Programming" - CONFIGURE DRIVE
•_ LOAD FROM OP	refer to Appendix D:"Programming" - CONFIGURE DRIVE

SOFTWARE Parameter

This parameter displays the software release of the firmware in the drive.

CONFIGURE I/O Parameter

This parameter is repeated in several menus. It is used whenever you want to save any changes that are made to a parameter.

Refer to Appendix D: "Programming" - Modifying a Block Diagram.

PARAMETER SAVE

Refer to "Saving Your Application", page 6-23.

MMI Menu Map

1 CONFIGURE DRIVE
- CONFIGURE ENABLE
- NOM MOTOR VOLTS
- ARMATURE CURRENT
- FIELD CURRENT
- FLD. CTRL MODE
- FLD. VOLTS RATIO
- MAIN CURR. LIMIT
- AUTOTUNE
- SPEED FBK SELECT
- ENCODER LINES
- ENCODER RPM
- ENCODER SIGN
- SPD. INT. TIME
- SPD. PROP. GAIN

CONFIGURE DRIVE

The CONFIGURE DRIVE menu contains many of the important parameters used during set-up when using the Keypad.

NOTE **The FUNCTION BLOCKS\MISCELLANEOUS\CONFIGURE DRIVE menu contains a different set of parameters, for set-up using the configuration tool.**

Refer to Chapter 4: "Operating the Drive" - Setting-up the Drive to see the most important parameters being used.

CONFIGURE DRIVE (MMI view)

Parameter	Tag	Range	SETUP PARAMETERS Function Blocks
CONFIGURE ENABLE	**39**	**FALSE / TRUE**	
Selects Setup Mode (FALSE) or Configuration Mode (TRUE). Refer to Appendix D "Programming" - Modifying a Block Diagram.			
NOM MOTOR VOLTS	**521**	**100 to 875 VOLTS**	
Sets the 100% value for Armature Volts VA. Set this value to match the motor in use. (Refer to ARMATURE V CAL in the CALIBRATION function block).			
ARMATURE CURRENT	**523**	**drive dependent AMPS**	
Sets the 100% value for Armature Current IA. Set this value to match the motor in use.			
FIELD CURRENT	**524**	**drive dependent AMPS**	
Sets the 100% value for Field Current IF. Set this value to match the motor in use. Note: this should be set to a minimum value if in Field Voltage control - see FLD. CTRL MODE.			
FLD. CTRL MODE	**209**	**See below**	
Selects between open-loop VOLTAGE CONTROL or closed-loop CURRENT CONTROL.			*Refer to **FIELD CONTROL***
FLD. VOLTS RATIO	**210**	**0.0 to 100.0 % (h)**	
Sets the output dc field voltage as a ratio of the RMS FIELD supply voltage when FLD CTRL MODE is set to VOLTAGE CONTROL.			*Refer to **FIELD CONTROL***
MAIN CURR. LIMIT	**421**	**0.00 to 200.00 %**	
Independent symmetric current clamp. Sets symmetric clamps outside scaling from the CUR. LIMIT/SCALER parameter.			*Refer to **CURRENT LOOP***
AUTOTUNE	**18**	**OFF/ON**	
Turns the AUTOTUNE procedure on. Refer to Chapter 4: "Operating the Drive" - Performance Adjustment.			*Refer to **AUTOTUNE***

CONFIGURE DRIVE (MMI view)

Parameter	Tag	Range	SETUP PARAMETERS Function Blocks
SPEED FBK SELECT	**47**	**See below**	
Determines the source of the speed feedback signal. The default, ARM VOLTS FBK, uses internal circuitry to derive the speed feedback. The other selections require the appropriate external device to provide the feedback signal. 0 : ARM VOLTS FBK 1 : ANALOG TACH 2 : ENCODER 3 : ENCODER/ANALOG - for Parker SSD Drives use 4 : ENCODER 2			*Refer to* ***SPEED LOOP***
ENCODER LINES	**24**	**10 to 5000**	
The number of lines must be set to match the type of encoder being used. Incorrect setting of this parameter will result in an erroneous speed measurement. The 5901 Microtach has 1000 lines per revolution as standard. Proprietary encoders of other specifications can be normalised by setting this parameter as appropriate.			*Refer to* ***ENCODER***
ENCODER RPM	**22**	**0 to 6000**	
Motor top speed setting (100%) when using encoder feedback.			*Refer to* ***ENCODER***
ENCODER SIGN	**49**	**NEGATIVE / POSITIVE**	
Since the encoder feedback cannot be reversed electrically, the signal polarity can be reversed by the control software. *It is necessary to set up this parameter when in CLOSED-LOOP VEC mode, as the encoder direction must be correct for this mode to operate.*			*Refer to* ***ENCODER***
SPD.INT.TIME	**13**	**0.001 to 30.000 s**	
Speed loop PI integral gain adjustment.			*Refer to* ***SPEED LOOP***
SPD.PROP.GAIN	**14**	**0.00 to 200.00**	
Speed loop PI proportional gain adjustment.			*Refer to* ***SPEED LOOP***

FUNCTION BLOCKS

Refer to Appendix D where all the function blocks under this menu are listed in alphabetical order.

This menu repeats all the parameters provided by other menus. The structure of this programmers' menu is the same as the CELite Configuration Tool.

Menu Shortcuts and Special Key Combinations

Quick Tag Information

Hold down the **M** key for approximately ½ second in any Menu System parameter to display the Tag number for that parameter.

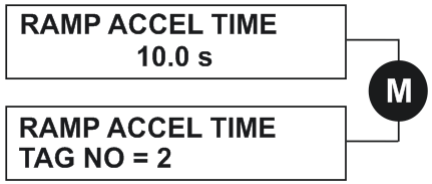

Changing the Stack Size (3-button reset)

NOTE **This is only necessary if you are installing a new control board on an existing stack.**

Power-up the drive holding three keys as described below.

Caution

At this point, the 590+ thinks that it is a 34A model. It is vitally important that it is configured for the correct power rating or irreparable damage may occur to the drive when it attempts to run the motor.

Continue to select the correct Product Code rating. Perform a PARAMETER SAVE now (refer to "Saving Your Application", page 6-23).

This is the preferred way of selecting a new product code. The available product codes are restricted to the set of codes that match the stack that the control board is fitted to.

If the product code is changed during the 3-button reset, the following parameters are set to their default value for the new product code:

Tag 523	ARMATURE CURRENT
Tag 524	FIELD CURRENT
Tag 201	REGEN ENABLE

NOTE **The 3-button reset does not cause the default configuration to be loaded.**

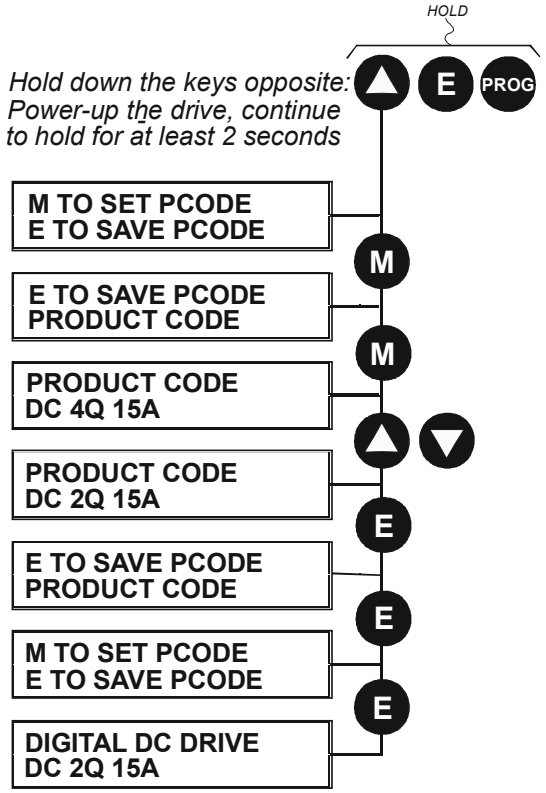

Resetting to Factory Defaults (2-button reset)

Power-up the drive holding two keys as described below.

The drive is now safely configured with the default settings detailed in this manual for the existing product code.

The default configuration is not automatically saved to non-volatile memory, so you must perform a PARAMETER SAVE (refer to "Saving Your Application", page 6-23).

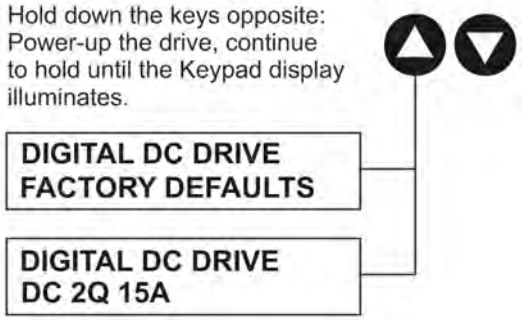

Cloning Feature

The Keypad can be used to transfer all parameters from a drive to another of the same rating. You can also use the Keypad to store a back-up of the drive's parameter settings.

SAVE TO OP will upload all parameter settings from the drive to the Keypad.

LOAD FROM OP will download all parameter settings from the Keypad to the drive.

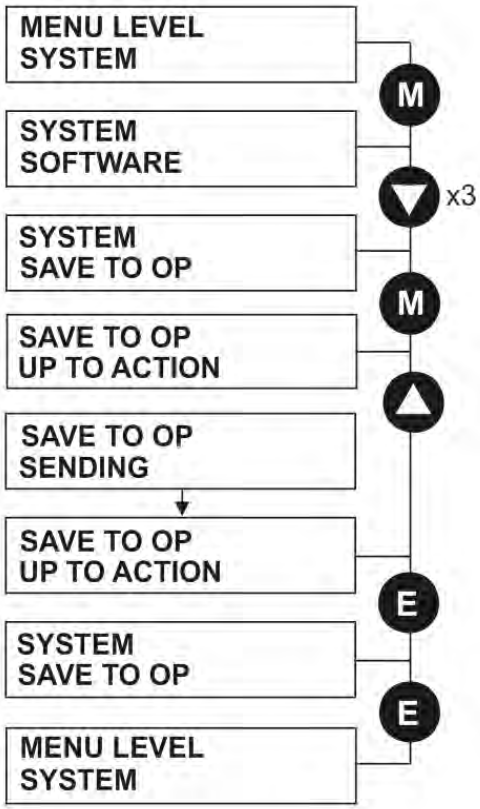

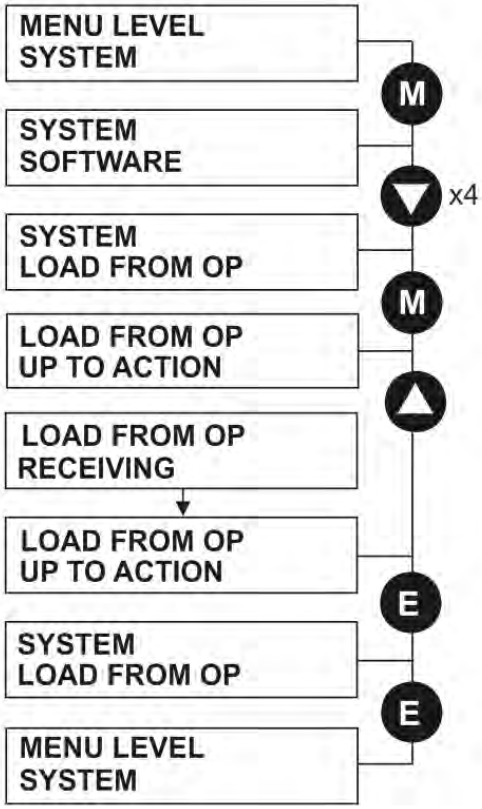

How to Save, Restore and Copy your Settings

Saving Your Application

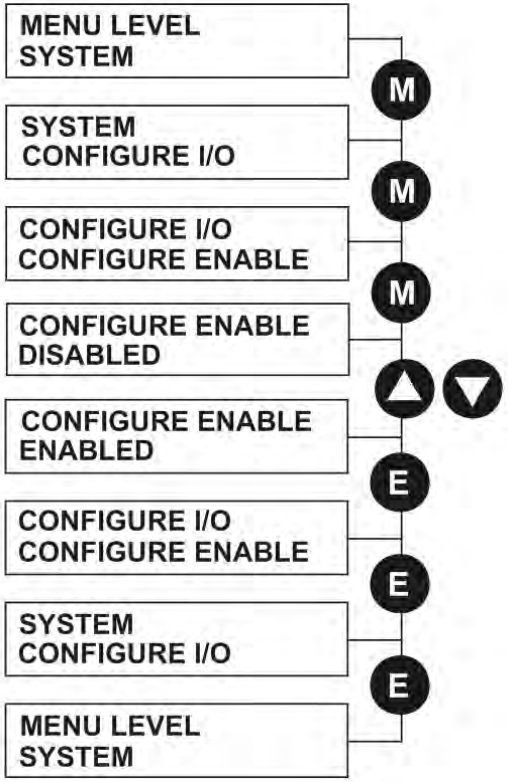

Operating Mode (CONFIGURE ENABLE = DISABLED)

In Operating mode you can change parameter values. The Drive can be running or stopped. Note that some parameters can only be changed when the Drive is stopped. It is not possible to modify the internal links when the Drive is in Operating mode.

Configuration Mode (CONFIGURE ENABLE = ENABLED)

In the configuration mode you can modify connections between the function blocks in the drive. You can also change parameter values, as above. The Drive cannot run in this mode. Output values are not updated.

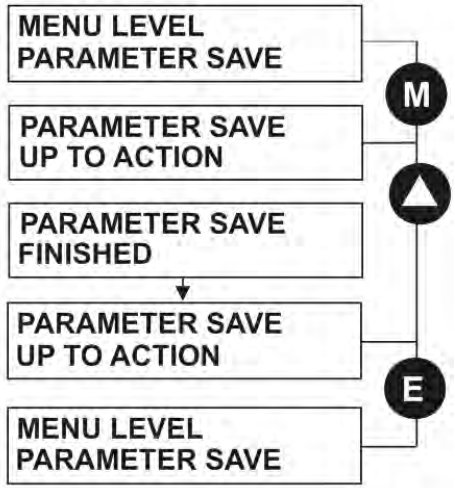

The PARAMETER SAVE menu, available in both the full and reduced view levels, is used to save any changes you make to the MMI settings.

Pressing the ▲ (UP) key, as instructed, saves all parameter values (with one exception, see the note below) in non-volatile memory, i.e. values are stored during power-down.

NOTE **The local setpoint parameter value is not saved on power-down.**

Restoring Saved Settings

If you are unsure about any changes you have made and you have not yet performed a PARAMETER SAVE, simply switch the Drive off, and power-up again. The “last saved” parameter settings will be restored.

Copying an Application

Copying an application requires a host computer connection to the Drive’s System Port (P3). Information can then be downloaded to the computer (and uploaded to the Drive).

Refer to Appendix A: “Serial Communications” for further information.

Chapter 7

Trips and Fault Finding

The drive may trip in order to protect itself. To restart the drive, you will need to clear the trip(s). This chapter provides a list of trips, as displayed by the keypad

Trips and Fault Finding 7-1
Trips 7-1
What Happens when a Trip Occurs 7-1
Resetting a Trip Condition 7-1
Fault Finding 7-2
Calibration Checks 7-3
Alarm Messages 7-7
Hexadecimal Representation of Trips 7-8
Power Board LED Trip Information (Frame 4, 5, 6 & H) 7-9
Using the MMI to Manage Trips 7-13
Test Points 7-19

Trips and Fault Finding

Trips

What Happens when a Trip Occurs

When a trip occurs, the Drive's power stage is immediately disabled causing the motor and load to coast to a stop. The trip is latched until action is taken to reset it. This ensures that trips due to transient conditions are captured and the Drive is disabled, even when the original cause of the trip is no longer present.

Drive Indications

If a trip condition is detected the unit displays and performs the following actions.

1. The HEALTH LED goes out indicating a Trip condition has occurred. (Investigate, find and remove the cause of the trip.)
2. Terminal B6 (Healthy) goes low (0V).

Keypad Indications

If a trip condition is detected the MMI displays and performs the following actions.

1. The HEALTH LED goes out indicating a Trip condition has occurred. The MMI displays the activated alarm. (Investigate, find and remove the cause of the trip.)
2. The alarm message(s) can be acknowledged by pressing the **E** key, however, the unit will not restart at this point.

Resetting a Trip Condition

All trips must be reset before the Drive can be re-enabled. A trip can only be reset once the trip condition is no longer active, i.e. a trip due to a heatsink over-temperature will not reset until the temperature is below the trip level.

NOTE **More than one trip can be active at any time. For example, it is possible for both the HEATSINK TRIP and the OVERVOLTS (VA) trips to be active. Alternatively it is possible for the Drive to trip due to a FIELD OVER I error and then for the HEATSINK TRIP trip to become active after the Drive has stopped (this may occur due to the thermal time constant of the heatsink).**

You can reset the trip(s) in one of two ways:

1. Power-up, or remove and re-apply the auxiliary power supply.
2. Stop and start the drive, i.e. remove and re-apply the Start/Run signal (terminal C3 or C4, or the STOP and RUN keys on the MMI).

Success is indicated by the HEALTH LED (on the unit or MMI) illuminating. The MMI will return to its original display.

Fault Finding

Problem	Possible Cause	Remedy
Drive will not power-up	Fuse blown	Check supply details, replace with correct fuse.
		Check Product Code against Model No.
	Faulty cabling	Check all connections are correct and secure.
		Check cable continuity
Drive fuse keeps blowing	Faulty cabling or connections wrong	Check for problem and rectify before replacing with correct fuse
	Faulty Drive	Contact Parker SSD Drives
Cannot obtain HEALTH state	Incorrect or no supply available	Check supply details
Motor will not run at switch on	Motor jammed	Stop the Drive and clear the jam
Motor runs and stops	Motor becomes jammed	Stop the Drive and clear the jam
Motor runs at full speed only	Reversed tachogenerator or open circuit tachogenerator	Check tachogenerator connections
	Open circuit speed reference potentiometer	Check terminal

Table 7-1 Fault Finding

Calibration Checks

The drive leaves the factory with the following calibration switches correctly set. Inappropriate settings will prevent the drive from operating correctly. For your reference, the correct settings are given below.

IMPORTANT ***If you change the settings for any of these switches you MUST re-calibrate the Control Board. Refer to Chapter 4: "Operating the Drive" - Calibrating the Control Board.***

Control Board Calibration

The control board calibration scaling switch of previous DC590+ products (shown opposite) has been replaced by a software-controlled scaling function. There are no user settings required.

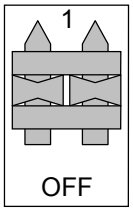

Power Board Current Calibration Switches (Frame 2)

NO POWER IS CONNECTED AT THIS STAGE

View the switches with the drive door open:

SW1 - Product Identity Switch

This switch is always set to HI.

SW2 - Burden Switch

This switch is always set to HI.

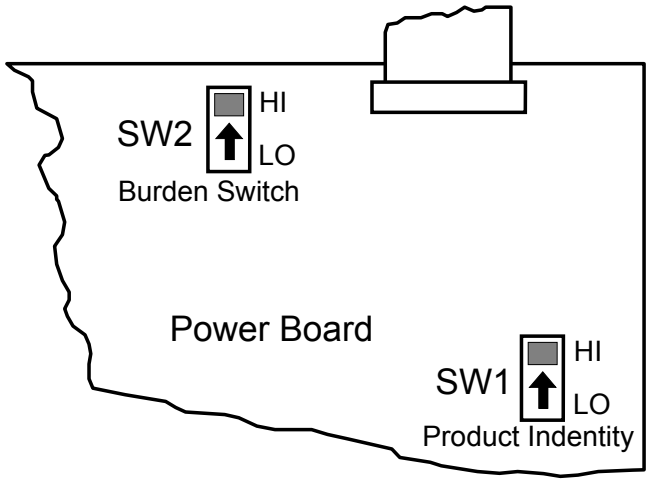

Adaptor Board Current Calibration Switch (Frame 3)

NO POWER IS CONNECTED AT THIS STAGE

View the switch with the terminal cover removed:

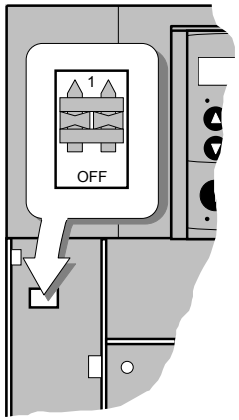

IA CAL - Armature Current Calibration Switch

This switch should be set to "1" (ON) for armature current scaling greater than 128A.
Set to OFF for other values.

NOTE **This switch must only be operated with the drive powered-down.**

Power Board Current Calibration Switches (Frames 4 & 5)

NO POWER IS CONNECTED AT THIS STAGE

View the switches with the drive door open:

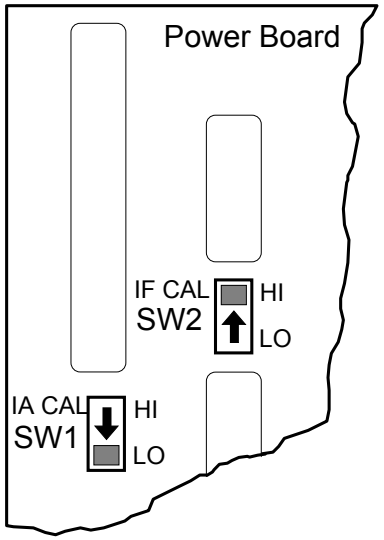

IA CAL – Armature Current Calibration Switch (SW1)

This switch is always set to LO on Frame 4 & 5 drives of 500A or less, and HI for drives greater than 500A.

IF CAL – Field Current Calibration Switch (SW2)

This switch is always set to HI for Frame 4 & 5 drives. The maximum field current calibration is 30A.

Power Board Current Calibration Switches (Frames 6 & H)

NO POWER IS CONNECTED AT THIS STAGE

To access the power board remove the terminal cover, unscrew the two fixings on the right hand side of the control door. Open the door to reveal the power board.

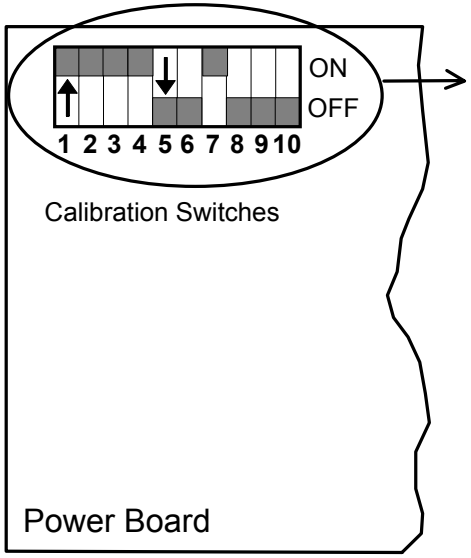

SW1 - 6 **Armature Current Calibration**
500A stages (factory setting = 2000A)
thus switches 1 to 4 = ON

SW7 Reserved (factory setting = ON)

SW8 - 9 **Field Current Calibration**

0 = OFF
1 = ON

8	9	Field Current Range
0	0	up to 20A (factory setting)
0	1	up to 40A
1	0	up to 60A
1	1	up to 80A

(not used on standard build)

SW10 **Armature Voltage Calibration**
OFF = VA / 100 (for VA up to 875V) (factory setting)

Figure 7-1 Calibration Switches

IA CAL - Armature Current

Calibration switches 1 to 4 are always set to “ON”, and 5 to 6 are always set to “OFF”.

Armature Voltage

Calibration switch SW10 is always set to "OFF".

IF CAL - Field Current

For field currents greater than 20A, set the Field Current calibration switches 8 and 9 to give the required Field Current range. The drive’s Product Code includes the value for Field Current. If you change the Field Current from the 20A factory setting to another value, you must now select the correct Product Code rating:

AUXILIARY POWER ONLY IS CONNECTED AT THIS STAGE

Apply auxiliary power. Note the current Product Code which is displayed on the MMI's Welcome screen at the top of the menu, e.g. DC 4Q 1700A **20** D (**20** = 20A Field Current range)

Set the following parameters, but first select CONFIGURE ENABLE to be ENABLED.

Now, for instance, to set the Field Current range for 40A, you must select the appropriate Product Code for a Field Current range of 40A, e.g. DC 4Q 1700A **40** D

To do this, refer to Chapter 6: "The Keypad" – Changing the Stack Size (3-button reset).

Note the nominal field current from the motor rating plate and set this value in the FIELD CURRENT parameter.

MMI Menu Map

1 CONFIGURE DRIVE
FIELD CURRENT

Now select CONFIGURE ENABLE to be DISABLED and perform a PARAMETER SAVE.

You MUST re-calibrate the Control Board.
Refer to Chapter 4: "Operating the Drive" - Calibrating the Control Board.

Adaptor Board Current Calibration Switch (Frames 6 & H)

NO POWER IS CONNECTED AT THIS STAGE

View the switch with the terminal cover removed:

IA CAL - Armature Current Calibration Switch

This switch is always set to "1" (ON).

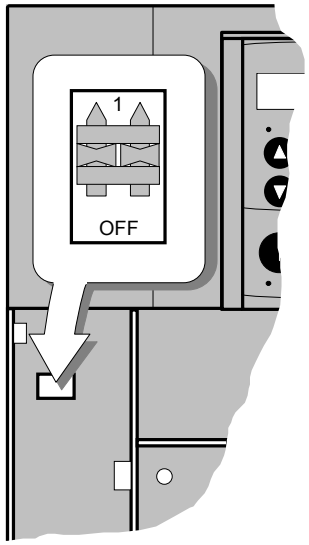

Alarm Messages

When a trip occurs an alarm message is displayed on the MMI, and information about the trip is stored in the ALARM STATUS menu.

The alarm message and the LAST ALARM parameter are displayed in the selected language when viewed on the MMI.

The HEALTH STORE, HEALTH WORD and ALARM HISTORY parameters display information as hexadecimal values, or the sum of the hexadecimal values when more than one alarm is active. Thus the unique value can represent one or more alarms.

MMI Menu Map

1 ALARM STATUS
- LAST ALARM
- HEALTH WORD
- HEALTH STORE

NOTE **Hexadecimal refers to the common practice of counting to the base of 16 in computing rather than the base of 10. The sixteen `numbers' used being 0 to 9, A to F. Thus an 8 bit byte is represented by two characters in the range 00 to FF, while a 16 bit word is represented by four characters in the range 0000 to FFFF.**

LAST ALARM

(Tag 528). This display shows the last alarm message to have been displayed. To reset the parameter simply press the ▼ (DOWN) key to clear the alarm. Alternatively, you can switch the auxiliary supply off and on, causing NO ACTIVE ALARMS to be displayed.

NOTE **The LAST ALARM value is presented in hexadecimal format when viewed in CELite or when used in the Block Diagram.**

HEALTH WORD

(Tag 115).This parameter is used to continuously monitor the status of the Drive. As alarms are added or removed, the display will immediately update to show the hexadecimal sum of these alarms.

The value reverts to 0x0000 when the Start (C3) input is raised (+24V), and when no trip condition is present.

HEALTH STORE

(Tag 116).This displays the hexadecimal value of the first (or only) alarm to occur causing the trip condition.

The display reverts to 0x0000 when the Start (C3) input is raised (+24V).

ALARM HISTORY

The most recent 10 alarm events are stored in the ALARM HISTORY funtion block, with the oldest in parameter ALARM 10 (OLDEST), and most recent in ALARM 1 (NEWEST). As with the HEALTH STORE and HEALTH WORD parameters, the alarm history is stored as four character hexadecimal numbers.

MMI Menu Map

1 FUNCTION BLOCKS

2 ALARMS

3 ALARM HISTORY
- ALARM 1 NEWEST
- ALARM 2
- ALARM 3
- ALARM 4
- ALARM 5
- ALARM 6
- ALARM 7
- ALARM 8
- ALARM 9
- ALARM 10 OLDEST

Hexadecimal Representation of Trips

The LAST ALARM, HEALTH WORD, HEALTH STORE and ALARM HISTORY parameters use a four digit hexadecimal number to identify individual trips. Each trip has a unique corresponding number as shown below.

LAST ALARM, HEALTH WORD and HEALTH STORE					
Trip		Trip Code			
		First Digit	Digit	Digit	Last Digit
	NO ACTIVE ALARMS				
0	OVERSPEED				1
1	MISSING PULSE				2
2	FIELD OVER I				4
3	HEATSINK TRIP *				8
4	THERMISTOR			1	
5	OVER VOLTS (VA)			2	
6	SPD FEEDBACK			4	
7	ENCODER FAILED			8	
8	FIELD FAILED		1		
9	3 PHASE FAILED *		2		
10	PHASE LOCK		4		
11	5703 RCV ERROR		8		
12	STALL TRIP	1			
13	OVER I TRIP	2			
14	OTHER •	4			
15	ACCTS FAILED *	8			

* *Refer to "Power Board LED Trip Information (Frame 4, 5, 6 & H)" below*

• *For the LAST ALARM parameter, replace OTHER with trip codes opposite.*

Trip Codes : LAST ALARM only					
14	AUTOTUNE ERROR	F	0	0	1
14	AUTOTUNE ABORTED	F	0	0	2
14	SEQ PRE READY	F	0	0	3
14	CONTACTOR DELAY	F	0	0	4
14	EXTERNAL TRIP	F	0	0	5
14	REMOTE TRIP	F	0	0	6
14	ENABLE LOW	F	0	0	7
14	SEQUENCING	F	0	0	9
14	COMMS TIMEOUT	F	0	1	0
14	CONFIG ENABLED	F	2	0	0
14	CALIBRATION TRIP	F	3	0	0
14	NO OP-STATION	F	4	0	0
14	AUX SUPPLY	F	F	0	3

When more than one trip is to be represented at the same time then the trip codes are simply added together to form the value displayed. Within each digit, values between 10 and 15 are displayed as letters A to F

For example, if the HEALTH WORD parameter is **01A8** then this represents a “1” in digit 3, an “8” and a “2” in digit 2, (8+2 = 10, displayed as A) and an 8 in digit 1. This in turn represents the active trips FIELD FAILED, ENCODER FAILED, OVER VOLTS (VA) and HEATSINK TRIP (an unlikely situation).

Decimal number	Display
10	A
11	B
12	C
13	D
14	E
15	F

Power Board LED Trip Information (Frame 4, 5, 6 & H)

The HEATSINK TRIP, 3 PHASE FAILED and ACCTS FAILED trips are associated with the following LED indications:

Frame 4

Check the LEDs on the power board for more HEATSINK TRIP information.

The LEDs light to indicate a problem.

Trips		
HEATSINK TRIP	field heatsink overtemperature	FLD HS OT
	armature heatsink overtemperature	ARM HS OT
3 PHASE FAILED	phase loss	PHASE LOSS

Frame 5

The master power board (on the left hand side of the unit) is fitted with a Parallel Expansion Board. This board has four additional LEDs providing information about the slave power board (on the right hand side of the unit), and about the general status of the unit.

The LEDs light to indicate a problem.

Trips		Master Power Board	Slave Power Board (indicated by the Parallel Expansion Board)
HEATSINK TRIP	field heatsink overtemperature	FLD HS OT	
	armature heatsink overtemperature	ARM HS OT	ARM HS OT
3 PHASE FAILED	phase loss	PHASE LOSS	PHASE LOSS
	phase rotation fault		PH ROT FLT
ACCTS FAILED	current imbalance		CUR IMBALANCE

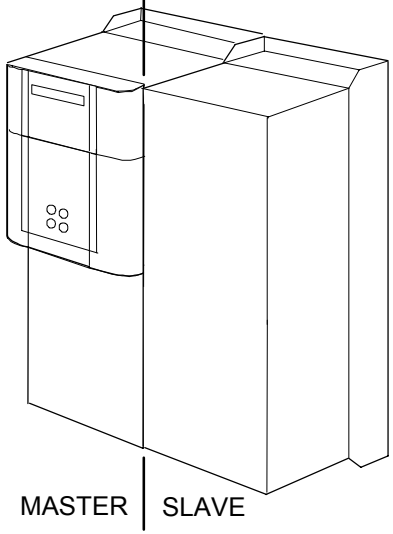

It is essential that the phase sequence applied to the two stacks are identical otherwise the converter will trip on 3 PHASE FAILED.

If there is a current imbalance between the stacks which exceeds 10% the converter will trip on ACCTS FAILED.

Frame 6

Eight diagnostic LEDs indicate further trip information, and general status of the unit. The LEDs go out to indicate a problem (note that LED1 may also flash as the SMPS attempts to power-up repeatedly, indicating a fault).

Trips			Power Board
	switched mode power supply on	SMPS OK	O LED1
ACCTS FAILED	trigger board connection status	TRIGGER BOARD PRESENT	O LED9
	ac current transformer connection status	ACCTS PRESENT	O LED10
3 PHASE FAILED	thyristor fuses status	THYRISTOR FUSES	O LED11
HEATSINK TRIP	field heatsink temperature normal	FIELD THERMOSTAT	O LED12
	L1 Phase Assembly heatsink temperature normal	L1 STACK THERMOSTAT	O LED13
	L2 Phase Assembly heatsink temperature normal	L2 STACK THERMOSTAT	O LED14
	L3 Phase Assembly heatsink temperature normal	L3 STACK THERMOSTAT	O LED15
	Fans stalled	L* FAN	O Fan LEDS

* In the event of a trip due to a stalled fan, an unlit fan LED will indicate the failed fan. With the drive stopped, operate the fan fail override switch and restart the drive. Diagnose the failed fan from the fan LEDs status.

Frame H

The power board has six LEDs indicating further trip information, and general status of the unit.

The LEDs go out to indicate a problem (note that LED1 may also flash as the SMPS attempts to power-up repeatedly, indicating a fault).

Trips		*Power Board*	
	switched mode power supply on	SMPS OK	LED1
ACCTS FAILED	trigger board connection status	TRIGGER BOARD PRESENT	LED4
	ac current transformer connection status	ACCTS PRESENT	LED3
3 PHASE FAILED	thyristor fuses status	THYRISTOR FUSES	LED6
HEATSINK TRIP	field heatsink temperature normal	FIELD HEATSINK	LED2
	armature heatsink temperature normal	STACK THERMOSTATS	LED5

Using the MMI to Manage Trips

Trip Messages

Most of the alarms have a delay timer so that the Drive only trips if the condition persists for the whole of the delay period.

If the Drive trips, then the display immediately shows a message indicating the reason for the trip. The possible trip messages are given in the table below.

Trip Message and Meaning	Possible Reason for Trip
OVERSPEED Motor overspeed - the speed feedback signal has exceeded 125% of rated speed.	Badly adjusted speed loop (alarm only operates with encoder or armature volts feedback selected) Alarm time delay : 50 milliseconds
MISSING PULSE A missing pulse from the 6-pulse armature current waveform. This trip is only enabled when the motor loading exceeds 1.5 times the DISCONTINUOUS parameter value. **Note that the MISSING PULSE trip is not intended or able to protect the drive if a thyristor fails to function during regenerative operation. This can result in damage to the drive.** We recommend fusing the armature circuit if regenerative operation is intended. The MISSING PULSE trip is intended to detect firing circuit connector problems during motoring operation of the drive.	Firing plug failure Connection failure Alarm time delay : 60 seconds
FIELD OVER I The motor field current has exceeded 120% of the calibrated value	External field has incorrect supply phases applied (Alarm only operates with field current control mode selected) Alarm time delay : 10 seconds

Trip Message and Meaning	Possible Reason for Trip
HEATSINK TRIP The Drive heatsink temperature is too high	The ambient air temperature is too high Poor ventilation or spacing between Drives Fan failure, check fuse on power board, wrong rotation (models above 70A bridge rating) Blocked ventilation slots Clogged air filters Excessive armature current - nominal armature current on motor nameplate should be checked against the current calibration for the Drive. ***Note:*** **The stack must be allowed to cool in order to re-start the Drive.** Alarm time delay : 0.5 seconds
THERMISTOR The motor temperature is too high	Inadequate ventilation Blower failure -check for direction, clogged air filters (models above 70A bridge rating) Excessive armature current - check nominal armature current on nameplate against current calibration) ***Note:*** **The motor must be allowed to cool in order to re-start the Drive.** Alarm time delay : 5 seconds
OVER VOLTS (VA) Motor armature voltage has exceeded 120% of rated volts	Loose armature connection Badly adjusted field voltage setting Badly adjusted field current loop Badly adjusted field-weakening bemf loop Badly adjusted speed loop Alarm time delay : 1 second
SPEED FEEDBACK The difference between speed feedback and armature voltage feedback is greater than the SPDFBK ALM LEVEL parameter value If FLD WEAK ENABLE parameter is enabled, speed feedback is less than 10% when in the field weakening region	Analog tacho feedback polarity incorrect (terminals G3 and G4) The ENCODER SIGN parameter's polarity is incorrect Disconnection of wiring, including fibre optics Armature voltage calibration has not been suitably reduced when running at reduced field currents Tachogenerator failure Tachogenerator coupling failure Alarm time delay : 0.125 seconds

Trip Message and Meaning	Possible Reason for Trip
ENCODER FAILED No speed feedback signal	The SPEED FBK SELECT parameter is set to ENCODER but an optional Encoder board is not fitted Where applicable, check fibre optic cable for damage, bend radius, operating length - refer to the Microtach handbook. Check cable and connections on wire-ended encoder
FIELD FAIL Field current is less than 6% of rated current when in Current Control mode Field current is less than 50mA when in Voltage Control mode (with default current burden of 15K)	Open circuit motor field - check connection and measure field resistance Faulty operation of field controller Where an ac supply feeds the onboard field regulator, check connections FL1 & FL2 for line-to-line voltage (rather than line-to-neutral) - L1 into FL1, L2 into FL2. Note that the 3-phase supply must be present for mains synchronisation purposes. For loads where no field supply is required, e.g. a permanent magnet motor, set the FIELD ENABLE parameter to DISABLED to suspend this alarm. Alarm time delay : 1 second
3-PHASE FAILED 3-phase supply failure	Total failure of supply, or missing phase of 3-phase supply (detected under most circumstances) - check supply to the controller, check high-speed thyristor stack protection fuses, check power chassis coding fuses. Check the mains voltage of the Drive (refer to the Product Code). This alarm may not operate properly with controller if the voltage is incorrect, i.e. wrong unit or controller.
PHASE LOCK Supply frequency is outside the frequency band limits 45 - 65Hz	Check supply frequency Synchronisation errors caused by distorted supply
5703 RCV ERROR Invalid data received via P3 port from another Drive	(Alarm only operates when MODE parameter is set to 5703 SLAVE)
STALL TRIP With motor stationary (AT ZERO SPEED parameter shows TRUE), current has exceeded the STALL THRESHOLD parameter value for longer than the STALL TRIP DELAY parameter value	(Alarm only operates when the STALL TRIP parameter is enabled).
OVER I TRIP Current feedback value has exceeded 280% of rated current	(300% loading not exceeding 15ms or 325% not exceeding 6.6ms is acceptable) Motor armature windings failure - check insulation resistance. Badly tuned current loop Faulty Drive - refer to Parker SSD Drives

Trip Message and Meaning	Possible Reason for Trip
ACCTS FAILED AC current transformer plug connection to Drive power board missing	Check armature current transformer plug for correct installation. Frame 5 only : Load imbalance between the two parallel power stacks ***Note:*** **The trip prevents the contactor closing and the current loop activating without armature current feedback - important in the case of external stack controllers where the thyristor stack is remote from the control board.**
AUTOTUNE ERROR Error has been encountered during the Autotune process to include: Speed feedback has exceeded 20% of rated speed Field current feedback has exceeded 6% of rated field current	The motor shaft was rotating, or was caused to rotate. The field current was seen to exceed 6%, when a field-off Autotune had been selected, or the field current stopped during a field-on Autotune. The drive to armature wiring was open-circuit. The discontinuous current boundary was found to exceed 200% of either the stack rating or the nominated motor armature current rating (refer to Chapter 5: "Control Loops" - Manual Tuning) Large imbalance in the three-phase voltages of the supply (refer to Chapter 5: "Control Loops" - Manual Tuning) A hardware fault relating to current feedback was detected on the control board.
AUTOTUNE ABORT The Autotune sequence has been aborted.	Coast Stop, Program Stop, Enable or Start Run terminal(s) disabled during Autotune sequence The AUTOTUNE parameter reset during the Autotune sequence Autotune sequence has timed-out (approximately 2 minutes).
SEQ PRE READY Coding not present.	Replace power board or chassis.
CONTACTOR DELAY The internal auxiliary 3-phase contactor failed to close.	Check the position of the Calibration Scaling Switch - refer to Calibration Checks, page 7-3.
EXTERNAL TRIP	Customer alarm! Trip operates if input open or high impedance. Alarm time delay : 0.2 seconds Device not wired to drive or device open circuited : check C1 to C2 connections to drive - connect C1 to C2 if customer device not fitted.
REMOTE TRIP	REM. SEQUENCE parameter Remote Trip flag set to zero.
ENABLE LOW	Local Mode run with Enable input low

Trip Message and Meaning	Possible Reason for Trip
SEQUENCING Internal sequencing error	Contact Parker SSD Drives
COMMS TIMEOUT Remote comms timeout	See COMMS TIMEOUT parameter in the SEQUENCING function block
CONFIG ENABLED	The drive was requested to start whilst in Configuration mode
CALIBRATION FAIL	Signal calibration fault If powering the unit off and on does not remove the problem, a hardware failure is suspected. Refer to Parker SSD Drives.
NO OP STATION	Keypad has been disconnected from Drive whilst Drive is running in local control.
AUX SUPPLY	Check auxilliary supply and/or mains input
COMMS FAULT CODE x	Keypad faulty Remote cable to keypad faulty Drive firmware not running
CRITICAL ERROR xxxx::xxxxxxxx	Contact Parker SSD Drives

Table 7-2 Trip Messages

Self Test Alarms

Self Test Alarm and Meaning	Possible Reason for Alarm
(EEPROM) CHECKSUM FAIL Parameters not saved, or are corrupted.	(The alarm appears at power-up or at the end of "Upload" UDP Transfer) Corrupted UDP file loaded - press the **E** key and perform a PARAMETER SAVE. The Drive will be returned to its factory default values.
LANGUAGE CHECKSUM FAIL Incorrect language selected, or corrupted	(The alarm appears at power-up or at the end of "Upload" UDP Transfer) Corrupted UDP file loaded - press the **E** key and reload the correct language or de-select the second language.

Setting Trip Conditions

The following parameters in the CALIBRATION and ALARMS menus are used to set trip conditions:

CALIBRATION :: OVER SPEED LEVEL
ALARMS :: SPDFBK ALM LEVEL
ALARMS :: STALL THRESHOLD
ALARMS :: STALL TRIP DELAY
ALARMS :: REMOTE TRIP DELAY

Viewing Trip Conditions

The following parameters in the ALARMS menu can be viewed to investigate trip conditions:

LAST ALARM
HEALTH WORD
HEALTH STORE
THERMISTOR STATE
SPEED FBK STATE
STALL TRIP
REMOTE TRIP

There are ten parameters in the ALARMS HISTORY function block that store the most recent alarm events.

Inhibiting Alarms

The following alarms can be inhibited in the ALARMS menu.

SPEED FBK ALARM
ENCODER ALARM
FIELD FAIL
5703 RCV ERROR
STALL TRIP
TRIP RESET
REM TRIP INHIBIT

The block diagram can be wired to reset a trip condition by using the TRIP RESET parameter in the ALARMS function block. A FALSE to TRUE transition of this parameter will cause the trip to reset.

NOTE **The STALL TRIP parameter in the DIAGNOSTICS menu is set regardless of the state of STALL TRIP inhibit. The flag is set after the stall time-out expires. The relevant bit (bit 12) in the HEALTH WORD and HEALTH STORE parameters is only set when STALL TRIP is enabled.**

Test Points

The following test points are located on the control board and can be accessed through the Technology Option housing. When used with a meter, they will provide valuable information in the event of a fault. Refer to Parker SSD Drives for further information.

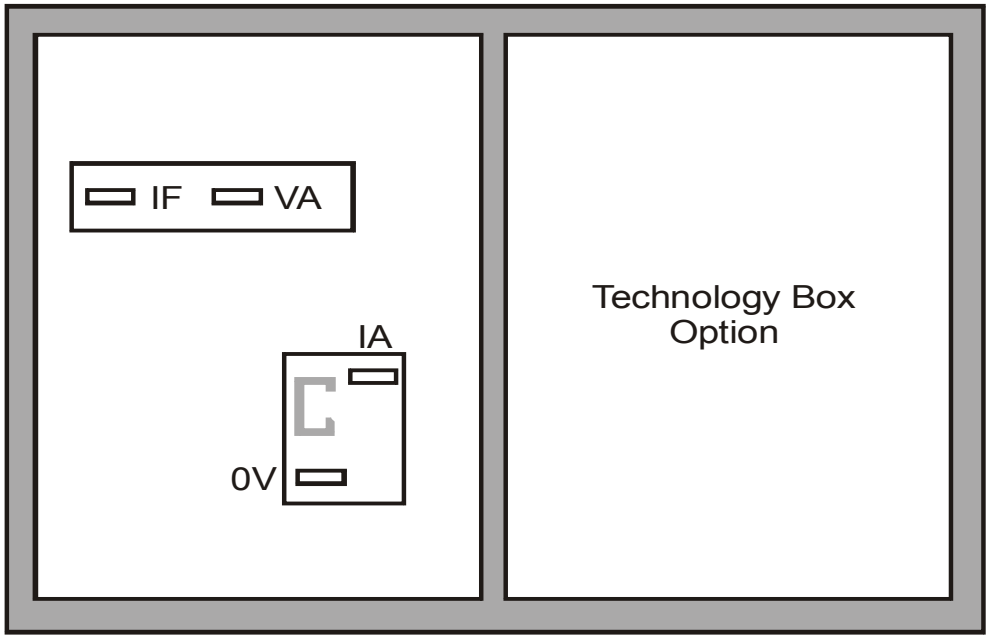

Test Points viewed through the front of the drive.

Test Point	Description
IF	Field current feedback 0.0V = 0% 4.0V =100% (mean voltage), *value of FIELD I FBK diagnostic, Tag No. 300*
IA	Armature current feedback ± 1.1V ≡ ±100% (mean current), *value of CURRENT FEEDBACK diagnostic, Tag No. 298*
VA	Armature volts feedback +5V ≡ +100%, +2.5V ≡ 0%, 0V ≡ -100% calculated VA (mean voltage), *value of TERMINAL VOLTS diagnostic, Tag No. 57*
0V	Control board 0V reference

Chapter 8

Routine Maintenance and Repair

This chapter contains preventive maintenance procedures, contact details for repairing the unit, and instructions for replacing fuses and fans.

Maintenance 8-1
Service Procedures 8-1
Preventive Maintenance 8-1
Repair 8-2
Saving Your Application Data 8-2
Returning the Unit to Parker SSD Drives 8-2
Disposal 8-3
Technical Support Checks 8-3
Repairs for Frames 4 & 5 8-5
Replacing the Fan (Frames 4 & 5) 8-5
Repairs for Frame 6 8-6
AC Fuse Replacement (Frame 6 Non-Regen Unit - 2Q) 8-6
DC Fuse Replacement (Frame 6 Regen Unit - 4Q) 8-7
Replacing a Phase Assembly (Frame 6) 8-9
Replacing a Fan (Frame 6) 8-10
Repairs for Frame H 8-11
Fuse Replacement (Frame H) 8-11
Phase Assembly Replacement (Frame H) 8-14

Maintenance

Because of its solid state design, the DC590+ Digital drive has few items requiring service or maintenance. Service is typically a matter of replacing fuses, checking electrical contacts, and isolating problems in the overall system application.

WARNING

Service procedures must be performed by qualified personnel with an understanding of the dangers inherent in high voltage applications and the precautions necessary when servicing industrial equipment. The customer is responsible for assessing the technical competency of in-house service personnel.

Service Procedures

Required Tools and Equipment

Tools needed for routine service operations include basic hand tools — screwdrivers, wrenches, etc.

WARNING

Only qualified service personnel should attempt to repair or replace parts in the 590+.

Isolate the entire 590+ drive from electrical power before attempting to work on it.

Preventive Maintenance

You should perform regular preventive maintenance every six months to ensure long life and continued usefulness of the 590+. Keep the drive and its components clean, check auxiliary fans if fitted, and make sure connections and mounting bolts have not loosened from vibration.

The control and field wires can be checked by gently attempting pulling the wires out of the terminals. The terminals should hold the wires firmly in place.

All the remaining wires should be checked with a torque wrench. Refer to Appendix E: "Technical Specifications" - Termination Tightening Torque tables.

Repair

There are no user-serviceable components. This section contains information for repair work that may be undertaken.

Saving Your Application Data

The Drive retains saved settings during power-down. You can download and upload this back into the repaired unit, if necessary. You may, depending upon your knowledge of the fault, attempt the back-up of your application data now, refer to Chapter 6: “The Keypad” - Copying an Application.

If the fault clearly lies within the MMI, then return the unit for repair.

Returning the Unit to Parker SSD Drives

Before calling Parker SSD Drives Customer Service, make sure you have the following information available:

Information	Source
Model number and serial number	DC590+Digital drive rating label
Motor horsepower, armature current and voltage, field current and voltage, base and top speed ratings	Motor nameplate
Speed voltage feedback per 1000 RPM (analog device), or counts per revolution(digital device)	Speed feedback device nameplate
Applications information and operating environment	System drawings.

Contact your nearest Parker SSD Drives Service Centre to arrange return of the item.

You will be given a *Returned Material Authorisation*. Use this as a reference on all paperwork you return with the faulty item.

Pack and despatch the item in the original packing materials; or at least an anti-static enclosure. Do not allow packaging chips to enter the unit.

Warranty Information

Warranty information precedes the *Contents* at the front of this manual.

Disposal

This product contains materials which are consignable waste under the Special Waste Regulations 1996 which complies with the EC Hazardous Waste Directive - Directive 91/689/EEC.

We recommend you dispose of the appropriate materials in accordance with the valid environmental control laws. The following table shows which materials can be recycled and which have to be disposed of in a special way.

Material	Recycle	Disposal
metal	yes	no
plastics material	yes	no
printed circuit board	no	yes

The printed circuit board should be disposed of in one of two ways:

1. High temperature incineration (minimum temperature 1200°C) by an incinerator authorised under parts A or B of the Environmental Protection Act
2. Disposal in an engineered land fill site that is licensed to take aluminium electrolytic capacitors. Do not dispose of in a land fill site set aside for domestic waste.

Packaging

During transport our products are protected by suitable packaging. This is entirely environmentally compatible and should be taken for central disposal as secondary raw material.

Technical Support Checks

The results of the following checks will be very useful to Parker SSD Drives' Technical Support.

WARNING

Please only attempt these checks if you are electrically competent.

Miscellaneous Checks	✓ or ✗
Check 24V present at Terminals C1 to C9 (C1 is 0V) - dc	
Check ±10V present at Terminals B3 and B4 (B1 is 0V) - dc	
Check auxiliary supply present at Neutral & Line, 110/240V ac	
Check the fans rotate, where applicable	

WARNING

Now isolate the unit completely from all supplies. It may be necessary to remove an armature and field connection to carry out the following checks.

Continuity Test on Fuses Using a Meter	✓or ✗
Check the coding fuses on the power board Check the auxiliary fuses etc. (fan fuse, if applicable)	
Diode Check on Power Terminals Using a Meter	✓or ✗
A+ to L1, L2, L3 and Earth Terminal = Open Circuit A- to L1, L2, L3 and Earth Terminal = Open Circuit	
Internal Field Check Using a Meter All the coding fuses must be OK before continuing with the following checks since the fuses are in the circuit.	✓or ✗
-ve to L1 & +ve to F+ = Diode Drop (approximately 0.5V) -ve to L2 & +ve to F+ = Diode Drop (approximately 0.5V) -ve to F- & +ve to F+ = Diode Drop (approximately 0.5V) -ve to L1 & +ve to F- = Open Circuit -ve to L2 & +ve to F- = Open Circuit	
External Field Check Using a Meter	✓or ✗
-ve to FL1 & +ve to F+ = Diode Drop (approximately 0.5V) -ve to FL2 & +ve to F+ = Diode Drop (approximately 0.5V) -ve to F- & +ve to F+ = Diode Drop (approximately 0.5V) -ve to FL1 & +ve to F- = Open Circuit -ve to FL2 & +ve to F- = Open Circuit	

Make a note of the Serial Number and Model Number.

Serial Number		**Model Number**	

Re-establish all connections. All terminals should be secure and not over-torqued.

Replacing the Fan (Frames 4 & 5)

WARNING!
Ensure that all wiring is electrically isolated and cannot be made "live" unintentionally by other personnel.

Remove the terminal cover. Unscrew the three screws securing the baffle and remove. Disconnect the fan supply cable. Remove the two M8 earth/ground screws on the back of the drive (Frame 5). Remove the fan cover. Remove the fan assembly and screws as detailed above.

Reverse the procedure for refitting the fan assembly – refer to the refitting note in the diagram above. The replacement fan assembly includes the fan, cover and capacitor, requiring just a simple connection of the supply cable.

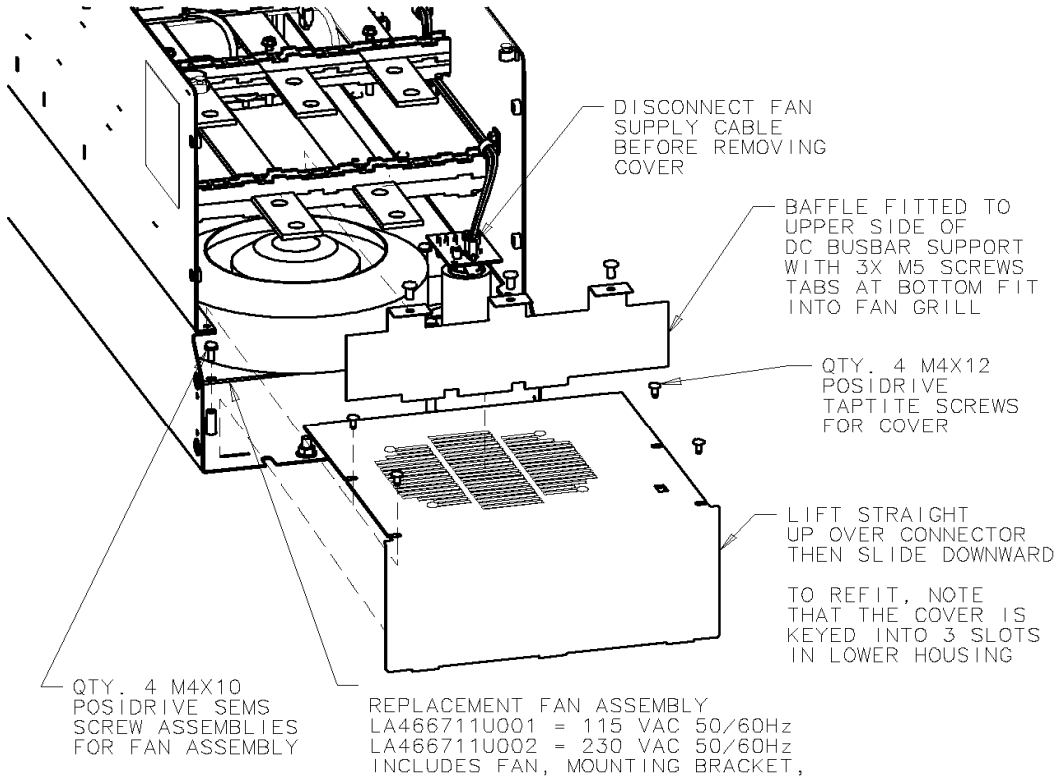

Heatsink Cooling Fan Connections

These fans are connected on the power board to the cooling fan supplies, CONN 2 or 3 as described below:

- 380, 500, 725, 830A models have a single fan matched to the auxiliary supply and connected to CONN 2.

1580A models have two fans matched to the auxiliary supply connected to CONN 2 & 3.

Repairs for Frame 6

WARNING!

The phase assembly metalwork (L1, L2 & L3) is LIVE **when the unit is switched on. Isolate the entire DC590+ drive from electrical power before attempting to work on it.**

Only qualified service personnel should attempt to repair or replace parts in the 590+.

AC Fuse Replacement (Frame 6 Non-Regen Unit - 2Q)

The AC fuse can be replaced *in-situ*. With the front of the drive removed (the Control Panel Assembly), the replacement should take about 20 minutes. Removing the Control Panel Assembly from the cubicle completely will make access easier, but requires the removal of all connections made to it. It may be possible to support the Control Panel Assembly (11.25kg/25 lbs) and sling it away from the Phase Assemblies far enough to gain access.

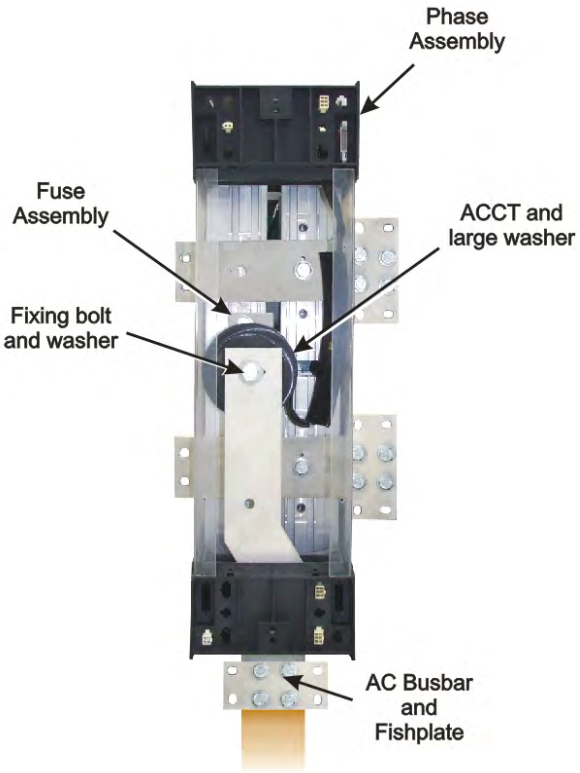

Removal

1. Loosen the retaining screws in the Field Controller plug. Unplug all connections to the Door Assembly (control connections) and the Field Controller (Auxiliary Plug and Field Plug).
2. Undo the fixings to remove the front cover from the Control Panel Assembly.
3. Disconnect the flying leads of the Control Panel Assembly from the three Phase Assemblies. Remove the external earth connection(s) made to the Front Cover.
4. Remove the 12mm x M6 fixings in the four corners that secure the Control Panel Assembly. Loosen the top and bottom central support screws (but do not remove) and lift the Control Panel Assembly away from the three Phase Assemblies.
5. Remove the fixings that secure the failed Phase Assembly front cover.
6. Disconnect the fishplate connected to the AC Busbar.
7. Slowly remove the ACCT's fixing bolt and washer from the AC Busbar, supporting the ACCT and large (rubber) washer as you do so. Lower the ACCT to one side and remove the rubber washer.
8. The fuse is mounted on a plate. Remove this Fuse Assembly from the Phase Assembly.
9. On the bench, undo the central bolt from the Fuse Assembly taking note of the placement of washers and other parts.

Refitting

1. Refit the Fuse to the mounting plate. Torque to 45Nm (33 ft.lbf). Fix the mounting plate to the Phase Assembly, securing it with the two bolts and washers. Torque to 32Nm (23.6 ft.lbf).

2. Slide the AC Busbar into position in the Phase Assembly and secure the ACCT and large rubber washer with the central bolt and washer. Torque to 45Nm (33 ft.lbf).

3. Reconnect the AC Busbar's fishplate carrying the mains connection (L1, L2 or L3). Torque to 55Nm (40.6 ft.lbf).

4. Refit the Phase Assembly front panel and secure with four screws and washers.

5. Offer up the Control Panel Assembly to the three Phase Assemblies and hang on the central support screws. Secure with 12mm x M6 screws and washers.

6. Reconnect the flying leads of the Control Panel Assembly to the three Phase Assembly units. Tighten the retaining screws in the Field Controller plug. Refer to Chapter 3: "Installing the Drive" - Frame 6: Assembly and Installation - Terminals.
7. Refit the front cover to the Control Panel Assembly, securing with the screws and washers. Connect the external earth to the Front Panel.

DC Fuse Replacement (Frame 6 Regen Unit - 4Q)

The DC fuse(s) can be replaced *in-situ*. With the front of the drive removed (the Control Panel Assembly), the replacement should take about 20 minutes. Removing the Control Panel Assembly from the cubicle completely will make access easier, but requires the removal of all connections made to it. It may be possible to support the Control Panel Assembly (11.25kg/25 lbs) and sling it away from the Phase Assemblies far enough to gain access.

Removal

1. Loosen the retaining screws in the Field Controller plug. Unplug all connections to the Door Assembly (control connections) and the Field Controller (Auxiliary Plug and Field Plug).

2. Undo the fixings to remove the front cover from the Control Panel Assembly.

3. Disconnect the flying leads of the Control Panel Assembly from the three Phase Assemblies. Remove the external earth connection(s) made to the Front Cover.

4. Remove the 12mm x M6 fixings in the four corners that secure the Control Panel Assembly. Loosen the top and bottom central support screws (but do not remove) and lift the Control Panel Assembly away from the three Phase Assemblies.

5. Remove the four screws that secure the failed Phase assembly front panel. Remove the front panel.

6. Remove the bolts securing the fishplates to the DC Busbar nearest the failed fuse.

7. If the failed fuse is located underneath the AC busbar: slowly remove the ACCT's fixing bolt and washer from the AC Busbar, supporting the ACCT and large (rubber) washer as you do so. Remove the rubber washer and lower the ACCT to one side.

8. Unplug the lead connected to the microswitch that is fitted to the side of the Fuse Assembly.

9. The fuse is mounted on a plate. Remove the two bolts and washers that secure this plate to the Phase Assembly and lift away the Fuse Assembly and DC Busbar.

10. On the bench, undo the central bolt from the Fuse Assembly taking note of the placement of washers and other parts. Re-build the assembly with the new fuse. Tighten the DC Busbar bolt to 45Nm (33 ft.lbf).

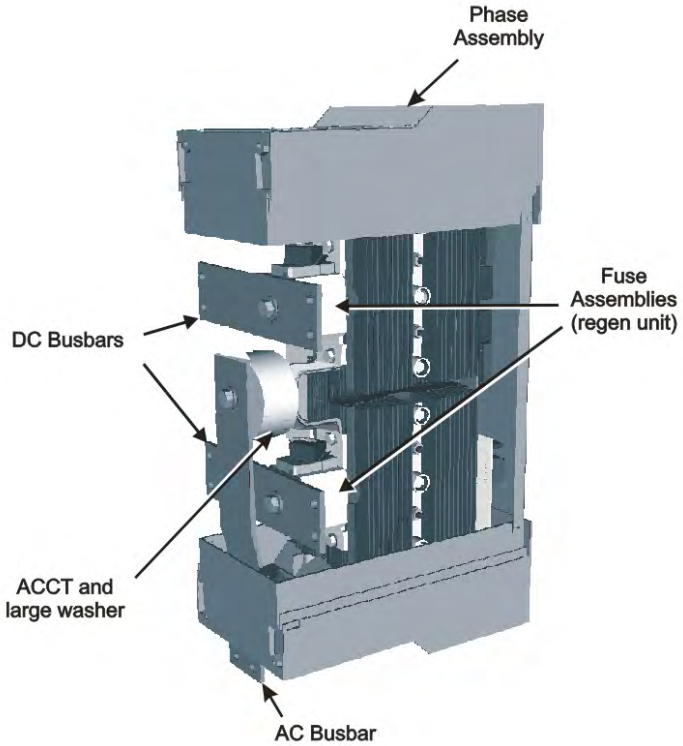

Refitting

1. Refit the Fuse to the Mounting Plate. Torque to 45Nm (33 ft.lbf). Fix the mounting plate to the Phase Assembly, securing it with the two bolts and washers. Torque to 32Nm (23.6 ft.lbf).

2. Plug the lead back onto the microswitch (removed earlier).

3. Slide the AC busbar into in the Phase Assembly and secure with the bolt and washer. Torque to 45Nm (33 ft.lbf).

4. Refit the fishplates that connect to the DC Busbars. Torque to 55Nm (40.6 ft.lbf).

5. Offer up the Control Panel Assembly to the three Phase Assemblies and hang on the central support screws. Secure with 12mm x M6 screws and washers.

6. Reconnect the flying leads of the Control Panel Assembly to the three Phase Assembly units. Tighten the retaining screws in the Field Controller plug. Refer to Chapter 3: "Installing the Drive" - Frame 6: Assembly and Installation - Terminals.

7. Refit the front cover to the Control Panel Assembly, securing with the screws and washers. Connect the external earth to the Front Panel.

Replacing a Phase Assembly (Frame 6)

NOTE **The Non-Regen Phase Assembly (2Q) weighs 28kg (62 lbs)**
The Regen Phase Assembly (4Q) weighs 33kg (73 lbs)

With the front of the drive removed (the Control Panel Assembly), the replacement should take about 20 minutes. Removing the Control Panel Assembly from the cubicle completely will make access easier, but requires the removal of all connections made to it. It may be possible to support the Control Panel Assembly (11.25kg/25 lbs) and sling it away from the Phase Units far enough to gain access.

Removal

1. Remove the plugs for the control wiring, auxiliary supply and field connections (loosen the screws to remove the field plug). Remove the Protective Earth connections (PE).
2. Undo the fixings to remove the front cover from the Control Panel Assembly.
3. Disconnect the flying leads of the Control Panel Assembly from the three Phase Assemblies.
4. Remove the 12mm x M6 fixings in the four corners that secure the Control Panel Assembly. Loosen the top and bottom central support screws (but do not remove) and lift the Control Panel Assembly away from the three Phase Assemblies.
5. Remove the bolts securing the fishplates to the DC Busbars.
6. Fit an M10 x 20mm long "temporary hanging" bolt to the "temporary hanging" mounting hole (top-centre) of the phase assembly to be removed. Screw it in loosely, leaving a few millimetres of thread still showing.
7. Remove the fixing bolts that hold the failed Phase Assembly onto the back panel. Lift it off the "temporary hanging" bolt. Refer to the note about weights at the top of the page.

Refitting

1. Hang the new Phase assembly onto the "temporary hanging" bolt. The fans should be at the bottom of the unit. Fit the 4 off M10 bolts and torque to 32Nm (23.6 ft.lbf).
2. Remove the "temporary hanging" bolt.
3. Refit the fishplates to the DC Busbars. Torque to 55Nm (40.6 ft.lbf).
4. Refit the front panel and secure with four screws and washers.
5. Offer up the Control Panel Assembly to the three Phase Assemblies and hang on the central support screws. Secure with M6 x12mm long screws and washers.
6. Reconnect the flying leads of the Control Panel Assembly to the three Phase Assembly units. Refer to Chapter 3: "Installing the Drive" - Frame 6: Assembly and Installation - Terminals.
7. Refit the front cover to the Control Panel Assembly, securing with the screws and washers.
8. Connect the plugs for the control wiring, auxiliary supply and field connections (tighten the screws to secure the field plug). Remake the Protective Earth connections (PE).

Replacing a Fan (Frame 6)

There are two fans mounted inside the base of each Phase Assembly. These are hard-wired together and are supplied as an assembly. Replacement of both fans is easy and should take about 15 minutes.

Removal

1. Remove the four screws that hold the bottom fan grille in place.
2. Remove the two screws from each fan.
3. Trace the route of the fan cable back to the front of the phase assembly and remove the fan connector from the phase assembly.
4. Remove the fans and cable assembly from phase assembly.
5. Fit the two fans to the phase assembly and secure with the screws. Hand-tighten.
6. Fit the new fan connector to the front of the phase assembly.

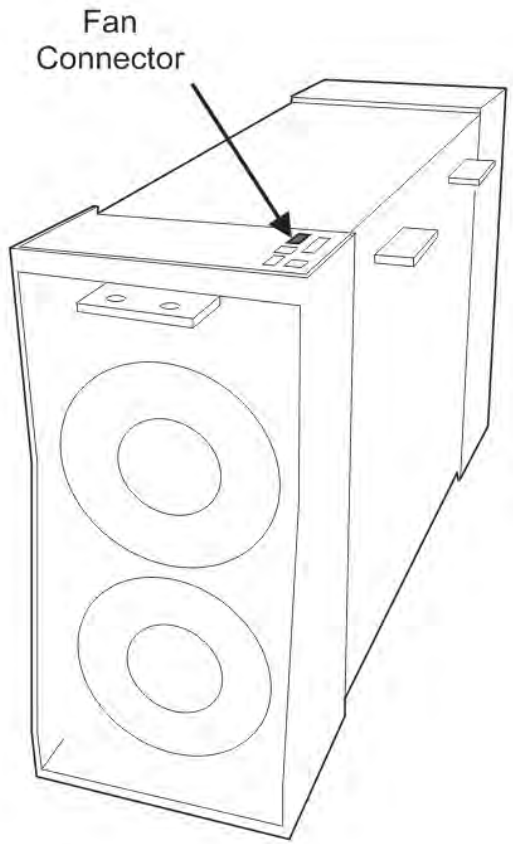

Repairs for Frame H

Fuse Replacement (Frame H)

1. Remove the front cover.
2. Unplug the ribbon cables to the trigger boards.
3. Open the swing-frame using the two quick-release fixings at the right hand end.

590+ 4Q Product (Regenerative)

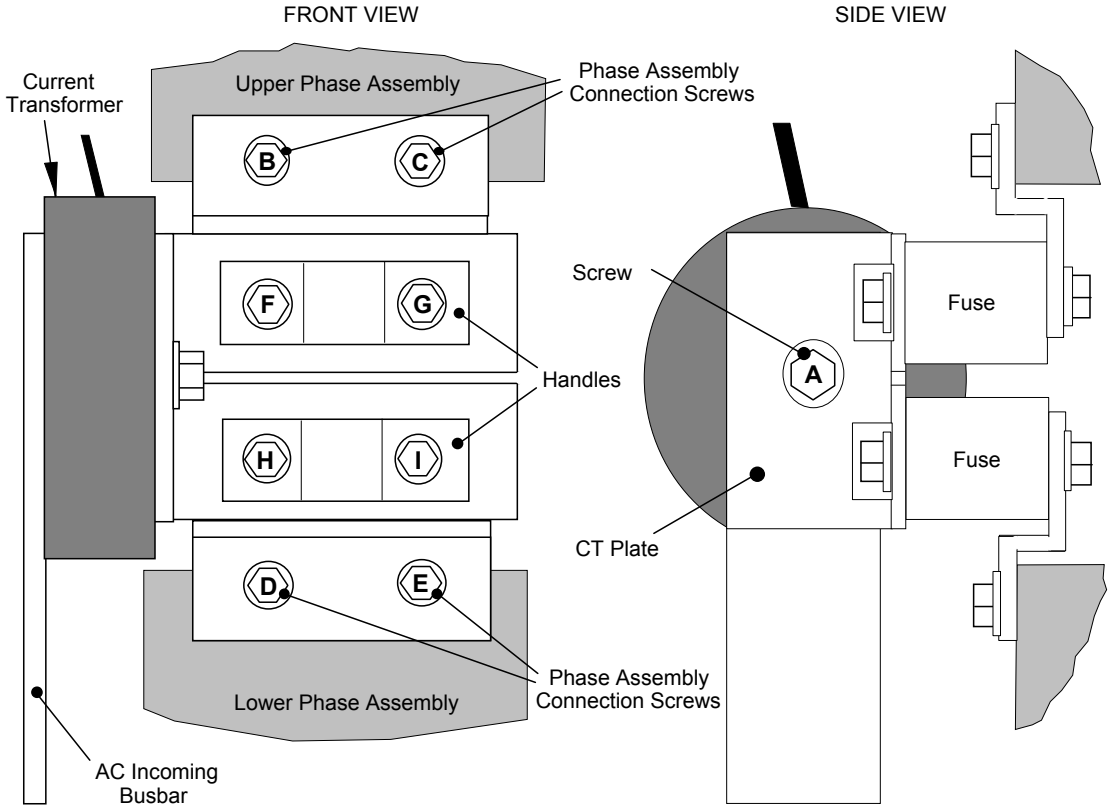

Figure 8-1 590+ (Frame H) Fuse Replacement Diagram

IMPORTANT ***When re-assembling the unit, apply a `zinc-loaded' jointing compound between the fuses and busbars, and between the busbars and phase assemblies (BICC BX1 - Parker SSD Part No. EA466241)***

Observe all tightening torque levels, refer to Appendix E: "Technical Specifications" - Termination Tightening Torque (Frame H).

Bench-Top Replacement Procedure

1. Disconnect the relevant fuse microswitch assembly by unplugging the lead assembly from the rear trunking.
2. Remove the M12 (A).
3. Loosen (but do not remove) the four M10 screws (B, C, D, E).
4. Hold the fuse assembly handle in one hand and remove the two screws (D, E) from the lower phase assembly.

CAUTION: The fuse assembly weighs 9kg maximum.

5. Hold the fuse assembly handles and remove the two screws (B, C) from the upper phase assembly.
6. With the fuse assembly on the bench, remove the M12 screws (F, G, H, I) holding the fuses to the busbars**. Take a note of the fuse microswitch position on the fuse assembly,** do not forget, as the lead assembly will not fit if mounted in the wrong position.

Reverse the above procedure for replacement. Remember to re-connect the fuse microswitches.

In-Situ Replacement Procedure

1. Disconnect the relevant fuse microswitch assembly by unplugging the lead assembly from the rear trunking.
2. Remove the M12 screw (A), and the 4 screws (F, G, H, I). Remove the CT plate and handles.
3. Remove the relevant screws (B, C or D, E) and lift the fuse busbar assembly from the phase assembly.
4. Replace the fuse on the busbar and re-connect the microswitch. Fully tighten the fuse to the busbar.
5. Fit the fuse busbar assembly on to the phase assembly. Don't fully tighten the screws yet.
6. Position the CT plate on top of the fuses. The slack in the fuse busbar assembly will allow the fixing holes to be aligned. Insert the screws.
7. Fully tighten all screws (including those in 5 above).
8. Re-connect the fuse microswitches.

591+ 2Q Product (Non-Regenerative)

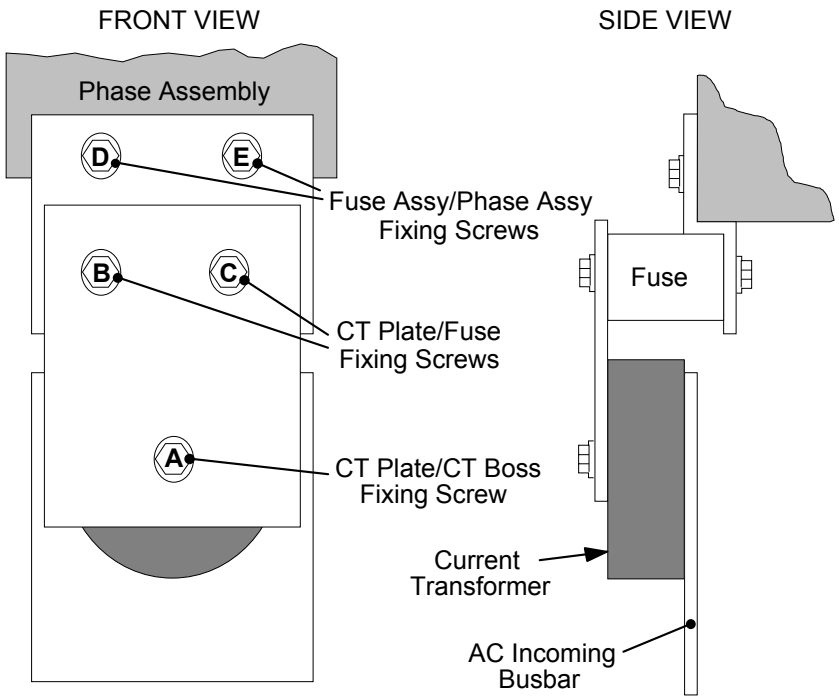

Figure 8-2 591+ Fuse Replacement Diagram

IMPORTANT ***When re-assembling the unit, apply a `zinc-loaded' jointing compound between the fuses and busbars, and between the busbars and phase assemblies (BICC BX1 - Parker SSD Part No. EA466241)***

Observe all tightening torque levels, refer to Appendix E: "Technical Specifications" - Termination Tightening Torque (Frame H).

Bench-Top Replacement Procedure

Working on the relevant fuse assemblies:

1. Remove the M12 screw (A).
2. Release the two M12 screws (B, C) and remove the CT plate.
3. Remove the two M10 screws (D, E) fixing the fuse assembly to the phase assembly.
4. On the bench, replace the relevant fuse on the fuse assembly.
5. Reverse the procedure for re-fitting.

Phase Assembly Replacement (Frame H)

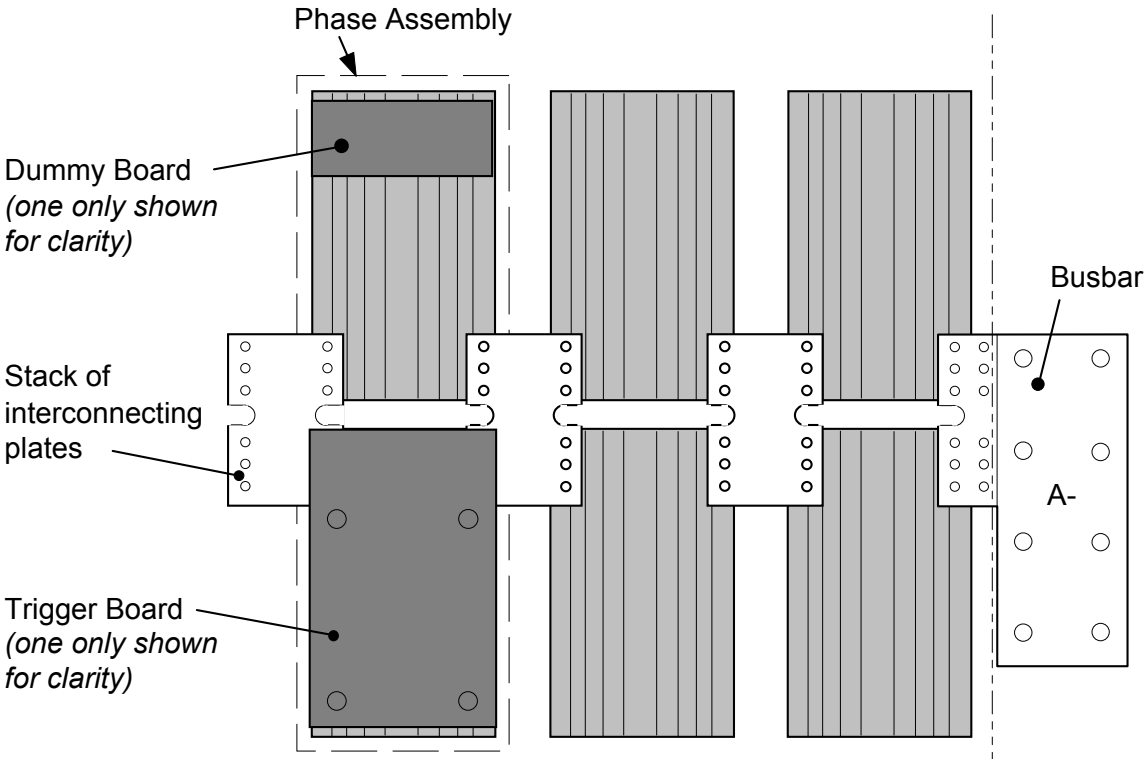

4Q
(upper phase assemblies only shown)

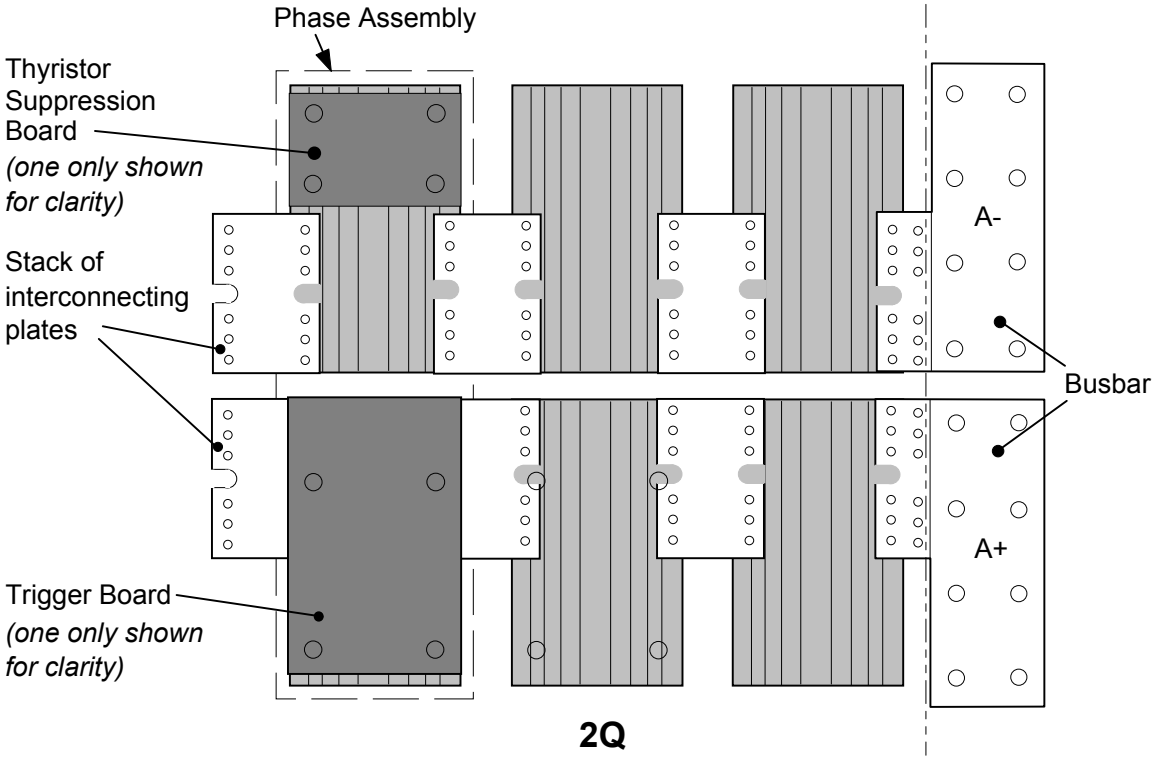

Figure 8-3 Front View of Phase Assemblies

IMPORTANT ***When re-assembling the unit, apply a `zinc-loaded' jointing compound between the fuses and busbars, between the busbars and phase assemblies and between the interconnection plates and the heatsink (BICC BX1 - Parker SSD Part No. EA466241)***

Observe all tightening torque levels, refer to Appendix E: "Technical Specifications" - Termination Tightening Torque (Frame H).

Phase Assembly Removal Procedure

1. Referring to Figure 8-1 (590+) or Figure 8-2 (591+), remove the M12 screw (A). Undo the four screws (B, C, D, E) which allows the CT plate and fuse assembly to be removed.
2. Unplug the thyristor gate leads and the heatsink overtemperature leads from the relevant phase assembly trigger board. Remove the same leads from the adjacent phase assembly or assemblies (this is necessary to gain complete access to the interconnecting plates.) If you are removing the phase assembly from a 591+ (2Q) product, also disconnect the thyristor suppression lead from the trigger boards.

3. Remove the trigger board by releasing the four M6 Sems nuts fixing the PCB to the assembly. If you are working on a 590+ (4Q), remove the dummy trigger board, or if working on a 591+ (2Q) remove the thyristor suppression board. Remove the air duct from the top of the phase assembly to gain access to the DC interconnection plates.
   Do not remove the trigger board support spacers.
4. Remove the DC interconnection plates between the phase assembly and its adjacent assemblies, either output terminals or phase assemblies.
5. If changing an upper phase assembly on a 590+ or 591+ remove the top baffle. This is achieved by pushing out the two end flaps of the plenum chamber and unclipping the top baffle from the top cover baffle stops and the top of the phase assemblies. Remove the vertical baffles between phase assemblies.
6. If changing a lower phase assembly on a 590+, remove the lower air duct.
7. Remove the complete phase assembly by removing the four M6 Sems nuts at the top and bottom of the phase assembly.

NOTE **On the 591+ 2Q, the left hand screw retains the phase coding connection which should be pushed to one side before lifting the phase assembly.**

Phase Assembly Fitting Procedure

1. Position the repaired or spare phase assembly on to the back panel spacer. (Remember to re-connect the coding lead to the bottom of the phase assembly when working on a 591+ 2Q).

   Check for correct orientation of the assembly. Fix in position with 4 x M6 Sems nuts and tighten to the correct torque level.

   Refit the interconnecting plate stacks between the phase assemblies. A stack of three plates are used on a 1200 Amp unit, four on a 1700 Amp unit, five on a 2200 Amp unit and six on a 2700 Amp unit. On a 4Q unit the plates interconnect both the upper and lower thyristors and adjacent phase assemblies. On the 2Q unit the plates interconnect adjacent phase assemblies. Tighten to the correct torque level.

NOTE **a) When fitting a spare phase assembly there may be some misalignment to the new phase where the interconnection plates do not fit easily. In this case, loosen the trigger support spacers which will allow adjustment of the support bars. Fit the interconnecting plates and re-tighten all units, including spacers.**

b) When re-assembling the interconnection plates it is important that a good electrical contact is made between the plates and the aluminium heatsink. Apply a layer of `zinc-loaded' jointing compound between the interconnection plates and the heatsink.

2. Refit the air duct on the phase assembly ensuring that the duct fits inside the side ducting of the phase assembly.
3. Refit the trigger board (thyristor suppression board or dummy board as appropriate) and secure with the M6 Sems nuts.
4. Reconnect the gate leads, thermostat and suppression lead as necessary. The gate leads cannot be fitted incorrectly as they are polarised by the plugs.
5. Re-fit the top baffle (either plenum cover or lower 4Q air duct) and vertical baffles.
6. Replace the fuse.
7. Re-close the swing-frame.
8. Replace the trigger board connectors.

Appendix A

Serial Communications

System Port (P3) A-1
UDP Support A-2
System Port (P3) Set-up A-2
UDP Transfer Procedure A-2
MMI Dump Procedure A-3
ConfigEd Lite Support A-4
System Port (P3) Set-up A-4
5703 Support A-5
System Port (P3) Set-up A-7
EI Bisynch ASCII Support A-8
System Port (P3) Set-up A-8
EI Binary Support A-13
System Port (P3) Set-up A-13
EI Bisynch Binary Message Protocol A-15
EI Bisynch Binary Parameter Specification Tables A-19
Error Codes A-28
ERROR REPORT (EE) A-28

System Port (P3)

This port has several uses:

UDP Support	Upload information from a PC	Refer to page A-2
ConfigEd Lite	Parameters can be monitored and updated by ConfigEd Lite (or other suitable PC programming tool)	Refer to page A-4
5703 Support	Connection for a Parker SSD Dries' 5703 Setpoint Repeater Unit	Refer to page A-5
EI ASCII	Communications with other control/supervisory equipment	Refer to page A-8
EI BINARY	Communications with other control/supervisory equipment	Refer to page A-13

Drive Connections

The port is an un-isolated RS232, 9600 Baud (default), supporting the standard EI BISYNCH ASCII communications protocol. Contact Parker SSD Drives for further information.

Use a standard P3 lead to connect to the Drive.

P3 Port Pin	Lead	Signal
1	Black	0V
2	Red	24V
3	Green	TX
4	Yellow	RX

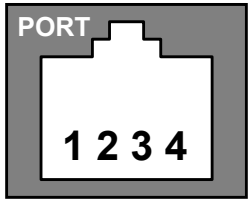

6-Way Lead to DB9/DB25 Connector

IMPORTANT ***There is 24V present on pin 2 of the P3 port. This may damage your PC or the Drive.***

P3 Port Pin	Lead	Female DB9 Pin	Female DB25 Pin
1	Black	5	7
2	Red	not connected	not connected
3	Green	2	3
4	Yellow	3	2

UDP Support

The Upload Download Protocol (UDP) can be used to transfer text files between the drive and a host computer using the P3 port. Files that can be transferred using UDP are configuration files, language files and text “dumps” of all the parameters shown on the MMI.

Configuration files and language files are formatted as Intel Hex files. The files contain a copy of the drive’s configuration and may be transferred either from the drive to the host computer, or from the host computer to the drive. **Transferring a configuration file to the drive will over-write all the drive’s settings.**

Language files contain information required to display parameters on the Display/Keypad in a language other than English. These may only be transferred from the host computer to the drive. Contact Parker for further information.

MMI dumps are human readable text files showing all the parameters in the drive in the oder they are shown on the MMI. The files can only be transferred from a drive to the host computer.

MMI Menu Map

1 SERIAL LINKS
2 SYSTEM PORT P3
>> P3 SETUP
DUMP CHANGED
DUMP MMI (TX)
UDP XFER (RX)
UDP XFER (T)
VERSION NUMBER

System Port (P3) Set-up

When transferring data using UDP the communications settings used are:

Baud rate selected via the P3 BAUD RATE parameter, (Tag No 198).

1 Stop bit, (fixed)

No Parity, (fixed)

8 data bits, (fixed)

No flow control, (fixed)

MMI Menu Map

1 SERIAL LINKS
2 SYSTEM PORT (P3)
3 P3 SETUP
MODE
5703 IN
>> BISYNCH SUPPORT
BAUD RATE

UDP Transfer Procedure

UDP XFER (RX)

This is the transfer of either a language or a configuration file from the host computer to the Drive. The drive automatically detects whether the file is a language file or a configuration file. **Transferring a configuration file to the drive will over-write all the drive’s settings.**

1. Connect the Drive to the host using the appropriate lead.
2. Using a standard communications package prepare the host to transfer an ASCII file. Remember to set-up the host's serial port first.
3. Start the transfer on the Drive by selecting UDP XFER (RX) on the MMI and pressing the UP (↑) key, as instructed.
4. When the Drive says RECEIVING, begin the file transmission.
5. The Drive automatically terminates the UDP transfer when it detects the end of the Intel Hex end-of-file record.

UDP XFER (TX)

This is the transfer of the drive's settings as an Intel Hex file.

1. Connect the Drive to the host using the appropriate lead.
2. Using a standard communications package prepare the host to receive an ASCII file. Remember to set up the host's serial port first.
3. On the host computer, direct data received on the serial comms port to a file.
4. Start the transfer on the Drive by selecting UDP XFER (TX) on the MMI and pressing the UP (↑) key, as instructed. The drive says SENDING.
5. When the transfer is finished, terminate the capture of serial data on the host computer.

MMI Dump Procedure

The MMI dump can be used to transfer all of the drive's parameters or just those that have been changed from the default values. The format of the data is human readable and may be used as documentation of the drive's configuration.

DUMP CHANGED

This parameter is used in conjunction with DUMP MMI (TX). When TRUE, only those parameters that have been modified from their default value are included in the dump.

DUMP MMI (TX)

This is the transfer of all parameters.

1. Connect the Drive to the host using the appropriate lead.
2. Using a standard communications package prepare the host to receive an ASCII file. Remember to set up the host's serial port first.
3. On the host computer, direct data received on the serial comms port to a file.
4. Start the transfer on the Drive by selecting DUMP MMI (TX) on the MMI and pressing the UP (↑) key, as instructed. The drive says REQUESTED..
5. When the transfer is finished, terminate the capture of serial data on the host computer.

ConfigEd Lite Support

This is Parker's Windows-based block programming software. It has a graphical userinterface and drawing tools to allow you to create block programming diagrams quickly and easily. Contact your local Parker SSD Drives sales office.

System Port (P3) Set-up

Set MODE parameter (Tag No. 130) to EIASCII using the MMI

Set the BAUD RATE parameter to match the baud rate selected on the host computer.

1 Stop bit (fixed)

Even Parity (fixed)

7 bits (fixed)

No flow control, (fixed)

MMI Menu Map

1 SERIAL LINKS

2 SYSTEM PORT (P3)

3 P3 SETUP

- MODE
- 5703 IN
- >> BISYNCH SUPPORT
- BAUD RATE

5703 Support

The 5703 Setpoint Repeater Unit provides the facility to run a line of drives in speed-lock without the use of a 5720 Quadraloc controller; for accurate speed-holding, encoder feedback is required. Ratioed speed-locking is supported, although the unit is not intended to replace the Quadraloc in applications requiring high accuracy.

A 16-bit speed signal is passed between drives via the P3 port on each Drive (a port otherwise used only off-line for the upload and download of EEPROM data). The port operates RS232 compatible signal levels. The 5703/1 converts these signal levels to fibre optic signals for transmission, and from fibre optics to RS232 for reception. Alternatively an external converter may be used to provide galvanic isolation and to convert the signals to RS485 for transmission over longer distances than is recommended for RS232.

Hardware Description

The 5703 is housed in a DIN rail mounted box and is provided with a cable to connect into the P3 port. The cable is 400mm long to limit transmission errors, the primary unit-to-unit interconnection is intended to be achieved by a fibre optic cable.

The 5703 unit itself is simply an electric signal-to-light converter and does not alter the signal in any way, this is achieved within the software data of the Drive.

It is fitted with one fibre optic receiver and two fibre optic transmitters, the fibre optic receiver has a fixed function to receive data from the preceding unit while the transmitter sends data to the following unit. The additional transmitter can be used either to re-transmit the incoming signal or provide a second transmission of the output signal, this gives the unit wide functionality. When the link is in the normal right hand position, assuming the board is mounted with the fibre optics downward, the second transmitter repeats the output signal. In the left hand position it repeats the input signal.

The 5703/1 can be configured to point to any relevant parameter in the block diagram, the default connections are such that the scaled input is connected to the "additional speed demand" and the output to the "speed demand".

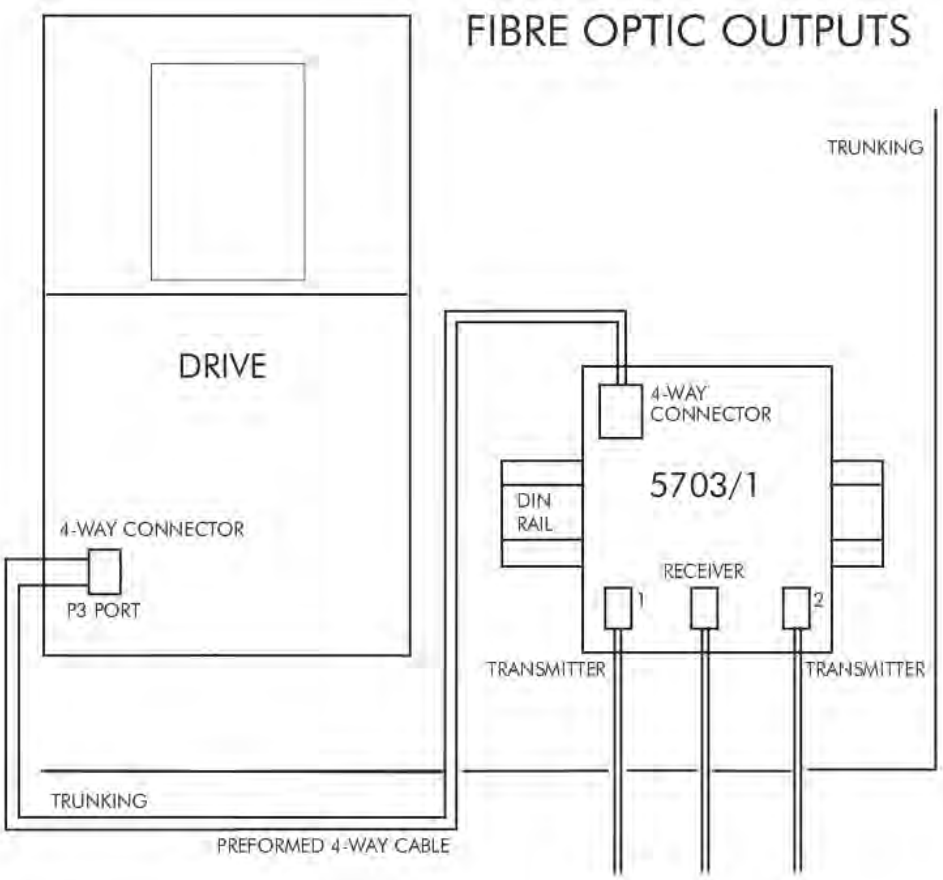

Figure A- 1 5703/1 Product Outline Drawing

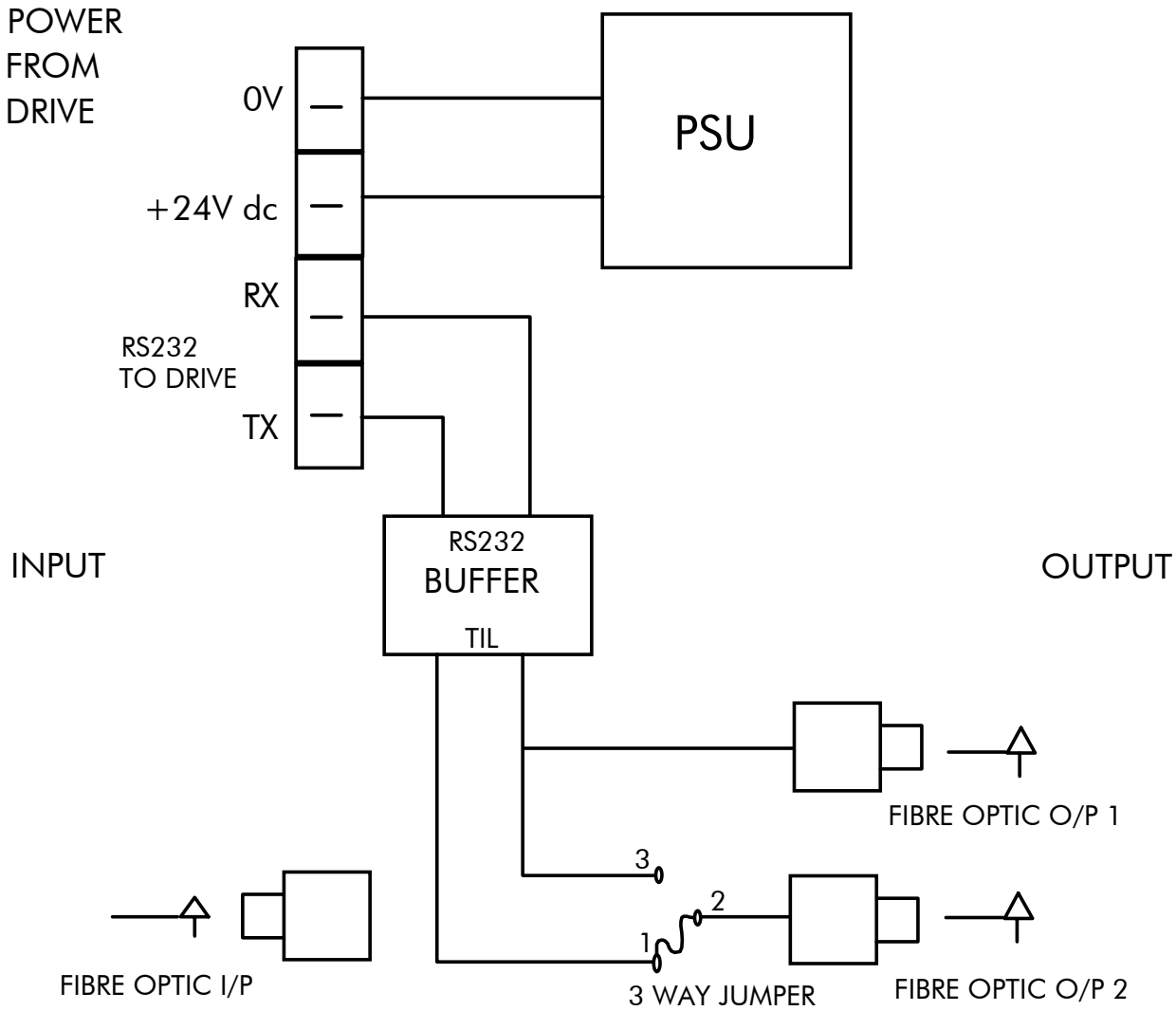

Figure A- 2 Wiring Diagram for 5703/1 Speed Repeater

System Port (P3) Set-up

Set MODE parameter (Tag No. 130) to 5703 SLAVE or 5703 MASTER using the MMI

Set BAUD RATE parameter (Tag No. 198) to the required baud rate using the MMI. The baud rate must be the same on both the transmitting and the receiving drives.

1 Stop bit (fixed)

NO Parity (fixed)

8 bits (fixed)

No flow control, (fixed)

MMI Menu Map

1 SERIAL LINKS
2 SYSTEM PORT (P3)
3 P3 SETUP
- MODE
- 5703 IN
- >> BISYNCH SUPPORT
- BAUD RATE

Commissioning the 5703/1

Input to the Drive

The speed setpoint from the 5703/1 enters the drive via the P3 port and, after scaling, is presented to the application as the parameter 5703 IN::SCALED INPUT. In the default application, this is added to analogue inputs 1, 2 and 3, (ramped), to form the setpoing. IN BASIC TACHO-FOLLOWER MODE, ALL THE ANALOG INPUTS MUST BE DISABLED TO PREVENT LOSS OF ACCURACY, yet it may be necessary in some applications to provide analog inputs for trim signals or inch setpoints:

1. The ramp input may be disabled by taking terminal C7 (Ramp Hold) permanently high; the ramp is automatically cleared when the drive is quenched, and its output will never move from (exactly) zero. The ramp input may often be of use in line master drives; but the ramp should be disabled in slave drives. Note that the P3 setpoint may be passed through the ramp function; in such a case, the analog input to the ramp (terminal A4) is automatically disconnected.
2. Analog input 1 (terminal A2) is used for inch setpoints. During normal running, the terminal is shorted to 0V and the deadband function is used so that no signal at all passes to the summing junction. The analog inch setpoints are set a little above the threshold of the deadband so as to give the required inching speeds, forward or backward. Selection between analog inching and absolutely zero analog input is thus accomplished automatically.
3. Analog input 2 (terminal A3) may be disabled by writing zero to its scaling block; this will normally be done through the MMI at commissioning, but may be overridden by the serial link. Alternatively, this input may be used for a local analog trim.

MMI Menu Map

1 SERIAL LINKS
2 SYSTEM PORT (P3)
3 P3 SETUP
4 5703 IN
- SETPT. RATIO
- SETPT. SIGN
- RAW INPUT
- SCALED INPUT

Output from the Drive

By default, the value transmitted from the drive is the SPEED DEMAND parameter.

MMI Menu Map

1 SYSTEM
2 CONFIGURE I/O
3 CONFIGURE 5703
- SOURCE TAG
- DESTINATION TAG

MMI Menu Map

1 FUNCTION BLOCKS
2 COMMUNICATIONS
3 5703 OUT
- INPUT
- DELAY

EI Bisynch ASCII Support

The drive can communicate using the EI Bisynch ASCII protocol without the need for a Technology Option board to be fitted.

NOTE **The P3 port is not physically compatible with a multi-point network.**

This communications protocol comes under the heading of Binary Synchronous Communications Data Link Control (BSCDLC). This is all part of an internationally recognised ANSI standard protocol called BISYNCH (Binary Synchronous) and is known by the abbreviation x3.28. It is widely used by manufacturers of computers, computer peripherals, and communications equipment.

EI BISYNCH, the specific form of communication used, corresponds with the following full American National Standard definition:

- ANSI Standard: x3.28, Revision: 1976
- Establishment and Termination Control Procedures Sub-category 2.5:
  Two-way Alternate, Non-switched Multi-point with Centralised Operation & Fast Select
- Message Transfer Control Procedure Sub-category B1:
  Message Associated Blocking with Longitudinal Checking & Single Acknowledgement

This is known by the abbreviation ANSI - x3.28 - 2.5 - B1.

Features

- Configured using Function Block inputs
- Diagnostics using Function Block outputs
- Software-selectable Baud Rate
- Software-selectable Slave Address
- Direct tag access for all parameters

System Port (P3) Set-up

Set MODE parameter (Tag No. 130) to **EIACSII** using the MMI

Set BAUD RATE parameter (Tag No. 198)

Set the GROUP ID parameter (the Parker SSD Drives protocol group identity address) to match the drive being communicated with.

Set the UNIT ID parameter (the Parker SSD Drives protocol unit identity address) to match the drive being communicated with.

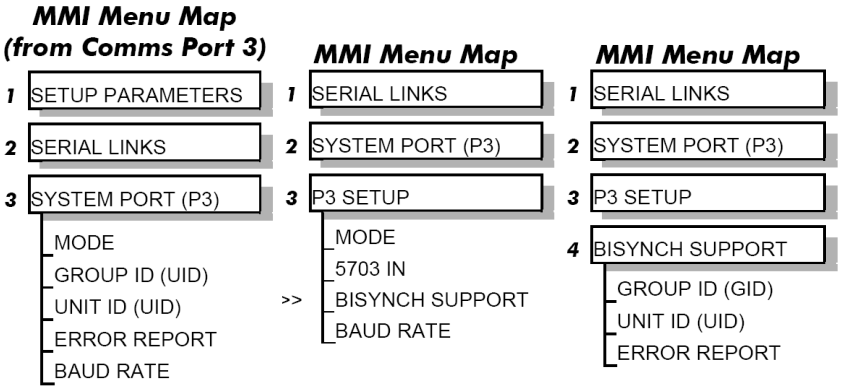

For details of the EI Bisync Protocol refer to the RS485 Communications Interface Technical Manual, HA463560U002. This is available for download on the Parker SSD Drives website, www.ssddrives.com.

EI Bisynch ASCII Parameter Mapping

1. EI Bisynch ASCII Prime Set

The following prime set parameters are supported:

Mnemonic	Description	Range (HEX encoding)	Access
II	Instrument Identity	>0690, >0605 or >5900	Read Only
V0	Main Software Version	>0000 to >FFFF	Read Only
V1	Keypad Software Version	>0000 to >FFFF (>0000 if not fitted)	Read Only
V2	Technology Box Software Version	>0000 to >FFFF	Read Only
EE	Last Error Code	>0000 to >FFFF (Writing any value resets this to >00C0)	Read/Write

2. Command/Status

The following Command/Status parameters are supported:

Mnemonic	Description	Range (Hex encoding)	Access
!1	Command	see below	Write Only
!2	State	see below	Read Only
!3	Save Command	see below	Write Only
!4	Save State	see below	Read Only

!1 : Command

Write-only: used to modify the state of the Inverter and to load configuration data from non-volatile memory.

HEX Value	Description
>7777	Reset Command. Acknowledges failed restore. Loads and saves (590+ does not save) default Product Code and default Configuration (Macro 1).
>0101	Restores Saved Configuration from drive's non-volatile memory.
>0111	Restores Default Configuration
>4444	Exit Configuration Mode
>5555	Enter Configuration Mode

!2 : State

Read-only: used to determine the major state of the Inverter.

HEX Value	Description
>0000	Initialising. (Powering up)
>0001	Corrupted Product Code and Configuration
>0002	Corrupted Configuration
>0003	Restoring Configuration
>0004	Re-Configuring Mode
>0005	Normal Operation Mode

!3 : Save Command

Write-only: used to save the configuration and product code in non-volatile memory.

HEX Value	Description
>0000	Reset Command. Acknowledges (clears) any previous save error.
>0001	Saves Configuration to drive's non-volatile memory.

!4 : Save State

Read only: used to determine the progress of a non-volatile saving operation.

HEX Value	Description
>0000	Idle
>0001	Saving
>0002	Failed

3. Tag Access

Each parameter in the Inverter's menu system is identified by a unique Tag Number. Information is exchanged across the system by use of a two character Mnemonic that is derived from the Tag Number.

NOTE **Refer to the Parameter Specification Table in Appendix D for a full list of tag mnemonics - see the MN column. Refer to the Notes column which gives access information about each parameter.**

Parameter Mapping

The algorithm to convert between tag number and 2 character mnemonics is:

```
if (TagNo < 936) then
        m = INT ((TagNo + 360)/36) (INT: the integer part)
        n = (TagNo + 360) MOD 36 (MOD: the remainder)
        if  m > 9 then
                char_1 = 'a' + (m - 10)
        else
                char_1 = '0' + m
        end_if
        if  n > 9 then
                char_2 = 'a' + (n - 10)
        else
                char_2 = '0' + n
        end_if
else
        m = INT ((TagNo - 936)/26) (INT: the integer part)
        n = (TagNo - 936) MOD 26 (MOD: the remainder)
        char_1 = 'a' + m
        char_2 = 'A' + n
end_if
```

The algorithm generates mnemonics containing only the characters '0' to '9', 'A' to 'Z' and 'a' to 'z'.

4. PNO Access

For compatibility with the earlier 590 product, parameters may also be accessed using the ASCII PNO listed in the "EI Bisynch Binary Parameter Specification Tables", page A-19. For example, PNO 39 can be accessed with the mnemonic "27".

5. Encoding

Type	Description	Encoding	Comments
BOOL	Boolean	FALSE >00 TRUE >01	Will accept >0 and >1
WORD	16-bit Bitstring	>0000 to >FFFF	Will accept leading zero suppression, except >0
INT	32-bit Signed Integer	-XXXXX. to XXXXX. -XXXXX.X to XXXXX.X -XXXXX.XX to XXXXX.XX -XXXXX.XXX to XXXXX.XXX -XXXXX.XXXX to XXXXX.XXXX	Leading zeroes suppressed up to digit before decimal point. Trailing zeroes suppressed after decimal point.
ENUM	Enumerated Value (0 to 99)	>00 to >FF	Leading zeroes suppressed, except >0.
TAG	Tag No.	-XXXX. to XXXX. or 0. to XXXX.	As INT above. Source tag numbers may be set negative to indicate a feedback link, used to break a loop of function blocks.

Note: *The "." in the above formats is not optional. It* ***must*** *be sent to conform to the EI-BISYNCH standard.*

EI Binary Support

This mode has many similarities with the ASCII mode, and so what follows is a summary of the differences to the ASCII mode.

Character Format
Each byte is transmitted as 11 bits rather than adapting the 10-bit format used by the ASCII mode. The format is represented by the following:-

1	Start bit (low)
7	Data bits (LSB first)
1	Control bit *
1	Even parity bit
1	Stop bit (high)

* 0 = Control character, 1 = Data character

How is the Information Transferred?

During serial communications, Drive acts as a slave and responds to messages sent from the Supervisor. Messages received from the Supervisor are categorised into Main Messages and Continuation Messages.

The Binary mode introduces several different Control and Data Characters. Refer to “EI Bisynch Binary Message Protocol”, page 15.

Response to a `Selection’ Message

The response is very similar to the ASCII mode but differs in that the ASCII (GID)/(UID) address is replaced by the Binary (INO), Instrument Number. Also, the ASCII parameter mnemonic (C1)(C2) is replaced by the Binary (PNO) character.

System Port (P3) Set-up

Set MODE parameter (Tag No. 130) to **EIBINARY** using the MMI

Set BAUD RATE parameter (Tag No. 198)

Set the GROUP ID parameter (the Parker SSD Drives protocol group identity address) to match the drive being communicated with.

Set the UNIT ID parameter (the Parker SSD Drives protocol unit identity address) to match the drive being communicated with.

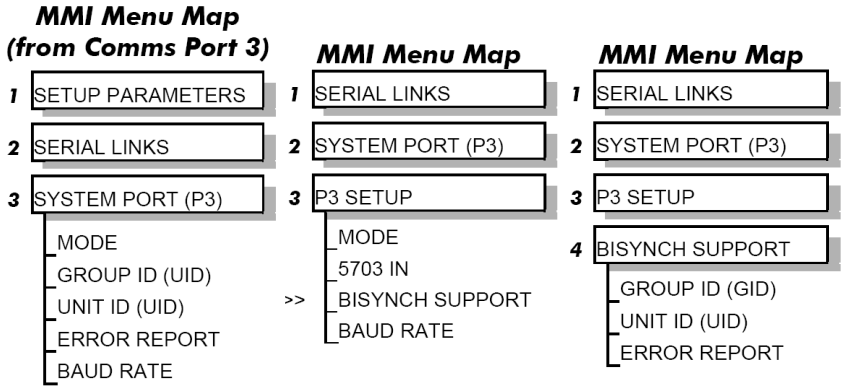

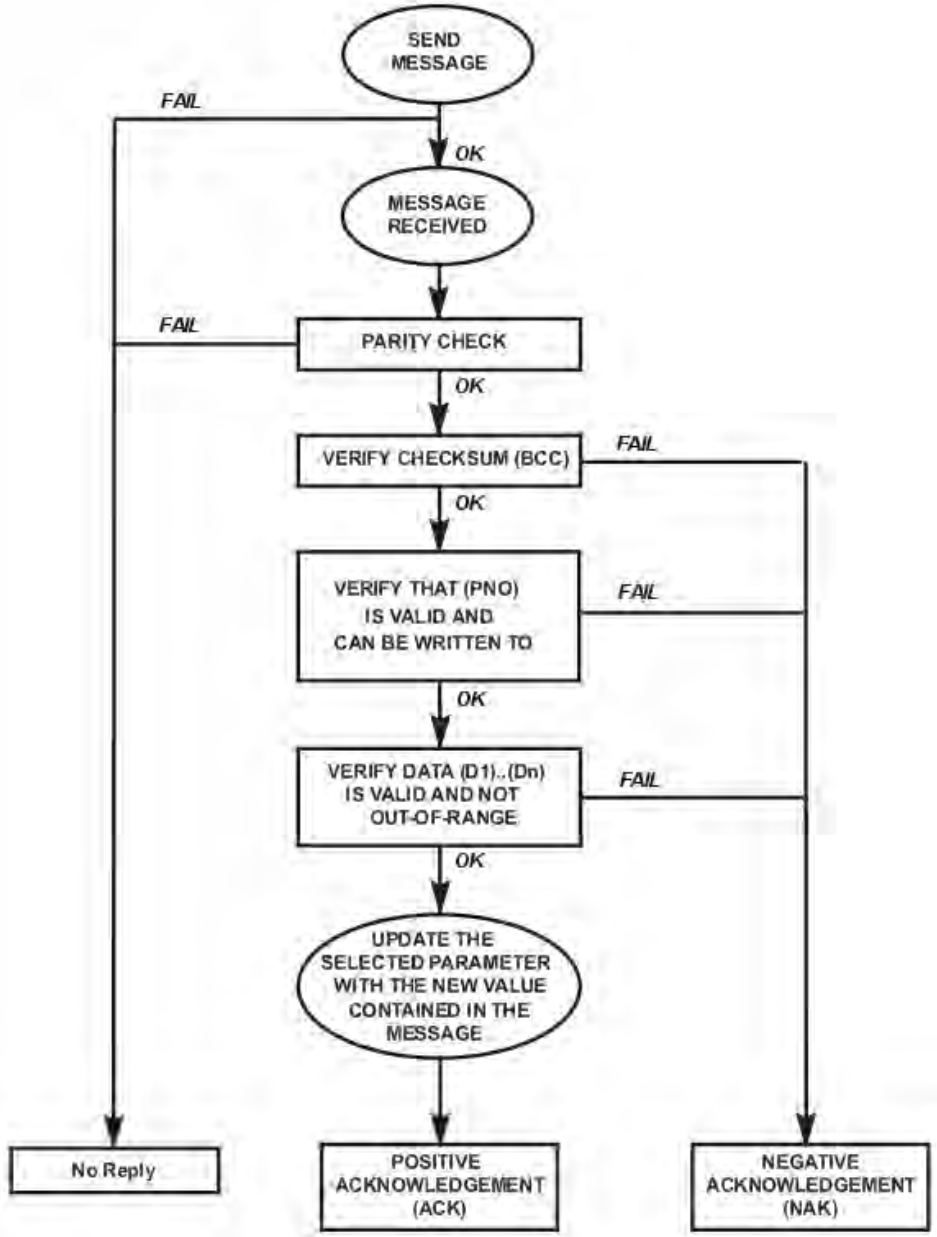

Figure A-3 Converter Response Sequence to a Binary Selection Message

EI Bisynch Binary Message Protocol

Transmission Standard	:	RS485 (RS422 bi-directional)
Protocol	:	ANSI-X3.28-2.5-B1
Data Rates	:	300, 600, 1200, 2400, 4800, 9600, 19200, 38400, 57600 or 115200 Baud
Character Format	:	1 start + 8 bit ASCII data + 1 parity + 1 stop bit (11 bits)
Parity	:	Even

Transferring Data - Binary Example Messages

There are two message types:

1. Main Messages
2. Continuation Messages

Main Messages

The main messages are in four types:

SELECTION

The Supervisor writes to one parameter. The (BCC) character contains the checksum of all characters following the (STX).

(EOT)	(INO)	(CCC)	(STX)	(PNO)	(D1)	(D2)	(D3)	(ETX)	(BCC)

POLLING

The Supervisor requests to read the value of one parameter.

(EOT)	(INO)	(PNO)	(CCC)	(ENQ)

ENQUIRY POLLING

The Supervisor requests to read all parameters in block 1.

(EOT)	(INO)	(CCC)	(ENQ)

MULTI-PARAMETER POLLING

The Supervisor requests to read a given number of parameters. That number is referred to as the count number (CNO), it is included in the request message and the reply will be sent by the drive, in blocks of up to 8 parameters.

(EOT)	(INO)	(PNO)	(CNO)	(CCC)	(ENQ)

NOTE **The (CCC) is the checksum of the characters following an (EOT) and is therefore equal to (INO) in Selection and Enquiry Polling messages.**

Continuation Messages

There are two types of continuation messages sent by the Supervisor:

NEXT (send next item from a list)

Only valid if sent following a multi-parameter poll.

(ACK)

REPEAT (repeat last response)

Only valid if sent following any type of poll. It requests a repetition of the previous response.

(NAK)

Serial Transmission Responses

SELECTION MESSAGE RESPONSE (one character)

Sent after the correct reception of a Selection message.

(ACK)

FAULT DETECTION RESPONSE (one character)

Sent in the case of detecting a fault.

(NAK)	or	(EOT)

POLLING MESSAGE RESPONSE (more than one character)

(STX)	(PNO)	(D1)	(D2)	(D3)	(ETX)	(BCC)

MULTI-POLLING MESSAGE RESPONSE (more than one character)

The response can consist of a group of messages (blocks). The (ETX) character is only sent at the end of the last block (as for Polling Message Response above).

For other blocks, the (ETX) is replaced by an (ETB) to indicate an end of a block rather than the end of the response.

Control Character Definitions

Standard Control Character Definitions	
(EOT)	End of Transmission (commands the slave to stop transmitting and wait to be addressed)
(STX)	Start of Text.
(ENQ)	Enquiry (sent by the master as the last character of any type of polling message)
(ETX)	End of Text (is followed by the checksum)
(ETB)	End of Block (sent instead of (ETX) when replying to a multi parameter enquiry). It indicates the end of a block, but not the end of a message.
(ACK)	Positive Acknowledgement
(NAK)	Negative Acknowledgement

Data Character Definitions

Standard Data Character Definitions	
(INO)	Instrument Number (contains the address of the slave drive and is equivalent to the combination of the GID, UID characters of the ASCII mode)
(PNO)	Parameter Number (equivalent to the combination of the (C1) and (C2) characters of the ASCII mode and is sent as a hexadecimal number rather than two ASCII characters)
(D1), (D2) and (D3)	These characters include the mode name and value read from, or to be written to, one of the parameters. A data character is represented by setting its MSB (bit 7). The contents of these characters are as follows: D1 : bits 2 [→] 6 mode number *Number format is:* 0 = XXXX 1 = XXX.X 2 = XX.XX 3 = X.XXX 4 = .XXXX bits 0 and 1 bits 14 and 15 of the value. D2 : bits 0 [→] 6 bits 7 to 13 of the value. D3 : bits 0 [→] 6 bits 0 to 6 of the value.
(CCC)	Connection Check Control (contains the checksum of all the characters following the (EOT) character in the message)
(BCC)	Block Check Charceter (checksum value generated by taking the exclusive OR (XOR) of the ASCII values of all characters transmitted after and excluding (STX) up to and including (ETX).

List of PNO Assignments

The serial link parameter numbers (PNO) include dedicated parameters, and also 16 configurable parameters. These vary with each Drive type.

590+ and 590+DRV

The 16 configurable parameters have PNO's 112 to 127. These can be made to point to any TAG number, either via the MMI (PNO CONFIG), or via the serial link.

PNO's 96 to 111 are pointers associated with PNO's 112 to 127.

For example:

If PNO 96 = 123, then PNO 112 will access TAG number 123.

If PNO 100 = 234, then PNO 116 will access TAG number 234

Enquiry Polling

In Enquiry Polling mode, block 1 is polled.

MMI Menu Map

1 SERIAL LINKS

2 PNO CONFIG

- PNO 112
- PNO 113
- PNO 114
- PNO 115
- PNO 116
- PNO 117
- PNO 118
- PNO 119
- PNO 120
- PNO 121
- PNO 122
- PNO 123
- PNO 124
- PNO 125
- PNO 126
- PNO 127

EI Bisynch Binary Parameter Specification Tables

Block 0

PNO	ACCESS	DESCRIPTION
0	R/O	Instrument Identifier. Same as ASCII mnemonic II.
1	R/W	Error report. Same as ASCII mnemonic EE
2	R/O	Drive Software Version Number.

Block 1

PNO (ID) BINARY	(MN) ASCII	TAG	DATA FORMAT BIT	ASCII	BINARY	LIMITS MIN TO MAX	ACCESS	DESCRIPTION
8	08	063	-	21	xxx.xx		R/O	Speed Setpoint
9	09	089	-	21	xxx.xx		R/O	Speed Demand
10	0A	062	-	21	xxx.xx		R/O	Speed Feedback
11	0B	066	-	21	xxx.xx		R/O	Current Demand
12	0C	065	-	21	xxx.xx		R/O	Current Feedback
13	0D	183	-	21	xxx.xx		R/O	Field Demand
14	0E	181	-	21	xxx.xx		R/O	Field Feedback
15	0F	115	-	23	xxxxx		R/O	Health Word
			0			0/1		OVERSPEED
			1			0/1		MISSING PULSE
			2			0/1		FIELD OVER I
			3			0/1		Heatsink Over Temperature
			4			0/1		Motor Over Temperature
			5			0/1		OVER VOLTS (VA)
			6			0/1		Speed Feedback
			7			0/1		Encoder Failed
			8			0/1		Field Failed
			9			0/1		Three Phase Failed
			10			0/1		Phase Lock Loop
			11			0/1		5703 Receive Error
			12			0/1		Stall Trip
			13			0/1		Over Current Trip
			14			0/1		Cal. Card
			15			0/1		ACCTS Failed

Block 2

PNO (ID) BINARY	(MN) ASCII	TAG	DATA FORMAT BIT	ASCII	BINARY	LIMITS MIN TO MAX	ACCESS	DESCRIPTION
16	10	050	-	21	xxx.xx		R/O	Anin 1 (A2)
17	11	051	-	21	xxx.xx		R/O	Anin 2 (A3)
18	12	052	-	21	xxx.xx		R/O	Anin 3 (A4)
19	13	053	-	21	xxx.xx		R/O	Anin 4 (A5)
20	14	054	-	21	xxx.xx		R/O	Anin 5 (A6)
21	15	067	-	21	xxx.xx		R/O	Actual Pos I Lim
22	16	061	-	21	xxx.xx		R/O	Actual Neg I Lim
23	17	040	-	23	xxxxx		R/O	
-		068	0			0/1		Start Input
-		069	1			0/1		Jog Input
-		070	2			0/1		Enable Input
-		071	3			0/1		Digital Input 1
-		072	4			0/1		Digital Input 2
-		073	5			0/1		Digital Input 3
-		-	6			0/1		Program Stop Input
-		-	7			0/1		Coast Stop Input
-		074	8			0/1		Digital Output 1
-		075	9			0/1		Digital Output 2
-		076	10			0/1		Digital Output 3
-		-	11-15			0/1		Reserved

Block 3								
PNO (ID) BINARY	(MN) ASCII	TAG	DATA FORMAT BIT	ASCII	BINARY	LIMITS MIN TO MAX	ACCESS	DESCRIPTION
24	18	030		21	xxx.xx	-200.00/200.00	R/W	Additional Current Demand
25	19	015		21	xxx.xx	0/200.00	R/W	Main Current Limit
26	1A	087		21	xxx.xx	0/200.00	R/O	+ve Current Clamp
27	1B	088		21	xxx.xx	0/200.00	R/O	-ve Current Clamp
28	1C	016		21	xxx.xx	0/200.00	R/W	Current Loop P Gain
29	1D	017		21	xxx.xx	0/200.00	R/W	Current Loop I Gain
30	1E	171		21	xxx.xx	0/100.00	R/W	Field Current Setpoint
31	1F	116		23	xxxxx		R/O	Health Store
			0			0/1		Over Speed
			1			0/1		Missing Pulse
			2			0/1		Field Over Current
			3			0/1		Fin Over Temperature
			4			0/1		Motor Over Temperature
			5			0/1		Field Over Volts
			6			0/1		Speed Feedback
			7			0/1		Encoder Fail
			8			0/1		Field Fail
			9			0/1		Three Phase
			10			0/1		Phase Lock Loop
			11			0/1		5703 Receive Error
			12			0/1		Stall Trip
			13			0/1		Over Current Trip
			14			0/1		Cal. Card
			15			0/1		ACCTS Failed.

Block 4

PNO (ID) BINARY	(MN) ASCII	TAG	DATA FORMAT BIT	ASCII	BINARY	LIMITS MIN TO MAX	ACCESS	DESCRIPTION
32	20	060		21	xxx.xx		R/O	Back EMF
33	21	058		21	xxx.xx		R/O	Analogue Tach
34	22	059		21	xxxxx		R/O	Encoder
35	23	064		21	xxx.xx		R/O	Speed Error
36	24	132		21	x.xxxx	-3.0000/3.0000	R/W	P3 Setpoint Ratio
37	25	014		21	xxx.xx	0/200.00	R/W	Speed Loop P Gain
38	26	013		21	xx.xxx	0.001/ 30.000	R/W	Speed Loop Time Constant (SEC)
39 *	27			23	xxxxx			
		161	0			0/1	R/W	Aux. Start
		168	1			0/1	R/W	Aux. Enable
			2.7				-	Reserved
		288	8			0/1	R/W	External Ramp Reset
		287	9			0/1	R/W	Auto Reset
		113	10				R/O	Ramping
		303	11			0/1	R/W	Reset Ramp to Speed Feedback

Block 5								
PNO (ID) BINARY	(MN) ASCII	TAG	DATA FORMAT BIT	ASCII	BINARY	LIMITS MIN TO MAX	ACCESS	DESCRIPTION
40	28	006		21	x.xxxx	-3.0000/3.0000	R/W	Ratio 1
41	29	007		21	x.xxxx	-3.0000/3.0000	R/W	Ratio 2
42	2A	086		21	xxx.xx		R/O	Set Point Sum Output
43	2B	002		21	xxx.x	0.1/600.0	R/W	Ramp Accel. Time
44	2C	003		21	xxx.x	0.1/600.0	R/W	Ramp Decel. Time
45	2D	085		21	xxx.xx	-	R/O	Ramp Output
46	2E	041		21	xxx.xx	-100.00/100.00	R/W	Speed Setpoint 4
47	2F			23	xxxxx			
		082	0				R/O	Drive Start
		084	1				R/O	Drive Enable
		122	2				R/O	Health Flag
		125	3				R/O	Ready
			4 - 7					Reserved
		079	8				R/O	At Standstill
		112	9				R/O	Stall Trip Warning
			10 - 15					Reserved

Block 6

PNO (ID) BINARY	(MN) ASCII	TAG	DATA FORMAT BIT	ASCII	BINARY	LIMITS MIN TO MAX	ACCESS	DESCRIPTION
48	30	027		21	xxx.x	0.1/600.0	R/W	Stop time
49	31	026		21	xxx.x	0.1/600.0	R/W	P-Stop time
50	32	091		21	xxx.xx	0/200.00	R/W	P-Stop Current Limit
51	33	029		21	xxx.xx	0/100.00	R/W	Stop Zero Speed Threshold
52	34	005		21	xxx.xx	-100.00/100.00	R/W	Ramp Input
53	35	100		21	xxx.xx	-200.00/200.00	R/O	Setpoint Sum Input 1
54	36	309		21	xxx.xx	-200.00/200.00	R/W	Setpoint Sum Input 0
55	37			23	xxxxx			
		94	0			0/1	R/W	Aux. Digital Output 1
		95	1			0/1	R/W	Aux. Digital Output 2
		96	2			0/1	R/W	Aux. Digital Output 3
		-	3 - 7					Reserved
		292	8			0/1	R/W	Sign 0
		8	9			0/1	R/W	Sign 1
		9	10			0/1	R/W	Sign 2
			11 - 15					Reserved

Block 7

PNO (ID) BINARY	(MN) ASCII	TAG	DATA FORMAT BIT	ASCII	BINARY	LIMITS MIN TO MAX	ACCESS	DESCRIPTION
56	38	055		21	xxx.xx		R/O	Analogue Output 1
57	39	056		21	xxx.xx		R/O	Analogue Output 2
58	3A	128		21	xxx.xx	-100.00/100.00	R/W	Aux. Analogue Output 1
59	3B	129		21	xxx.xx	-100.00/100.00	R/W	Aux. Analogue Output 2
60	3C	266		21	xxx.xx	0/100.00	R/W	% S-Ramp
61	3D	264		21	xxx.xx		R/O	Raise / Lower Output
62	3E	255		21	xxx.xx	-300.00/300.00	R/W	Raise / Lower Reset Value
63	3F	-		23	xxxxx			
-		261	0			0 1	R/W	Raise / Lower Raise Input
-		262	1			0 1	R/W	Raise/Lower Lower Input
-		307	2			0 1	R/W	Raise / Lower Reset

Block 8

PNO (ID) BINARY	(MN) ASCII	TAG	DATA FORMAT BIT	ASCII	BINARY	LIMITS MIN TO MAX	ACCESS	DESCRIPTION
64	40	218		21	xxx.xx	-100.00/100.00	R/W	Jog Speed 1
65	41	219		21	xxx.xx	-100.00/100.00	R/W	Jog Speed 2
66	42	253		21	xxx.xx	-100.00/100.00	R/W	Take Up 1
67	43	254		21	xxx.xx	-100.00/100.00	R/W	Take Up 2
68	44	225		21	xxx.xx	-100.00/100.00	R/W	Crawl Speed
71	47	-		23	xxxxx			
-		228	0			0 1	R/W	Jog Mode
-		227	1			0 1	R/W	Auxiliary Jog

Block 9

PNO (ID) BINARY	(MN) ASCII	TAG	DATA FORMAT BIT	ASCII	BINARY	LIMITS MIN TO MAX	ACCESS	DESCRIPTION
72	48	208		21	x.xxxx	-3.0000/+3.0000	R/W	Ratio 0
73	49	309		21	xxx.xx	-100.00/+100.00	R/W	Input 0
74	4A	48		21	xxx.xx	-100.00/+100.00	R/W	Pre-set -ve Current Limit
75	4B	301		21	xxx.xx	-100.00/+100.00	R/W	Pre-set +ve Current Limit

Block 10

PNO (ID) BINARY	(MN) ASCII	TAG	DATA FORMAT BIT	ASCII	BINARY	LIMITS MIN TO MAX	ACCESS	DESCRIPTION
80	50	103		21	xxx.xx	-300.00 /+300.00	R/W	Value for TRUE Digital Input 1
81	51	104		21	xxx.xx	-300.00 /+300.00	R/W	Value for FALSE Digital Input 1
82	52	106		21	xxx.xx	-300.00 /+300.00	R/W	Value for TRUE Digital Input 2
83	53	107		21	xxx.xx	-300.00 /+300.00	R/W	Value for FALSE Digital Input 2
84	54	109		21	xxx.xx	-300.00 /+300.00	R/W	Value for TRUE Digital Input 3
85	55	110		21	xxx.xx	-300.00/+300.00	R/W	Value for FALSE Digital Input 3

Block 11

PNO (ID) BINARY	(MN) ASCII	TAG	DATA FORMAT BIT	ASCII	BINARY	LIMITS MIN TO MAX	ACCESS	DESCRIPTION
88	58	339		21	xxx.xx	-300.00/+300.00	R/W	Value 1
89	59	340		21	xxx.xx	-300.00/+300.00	R/W	Value 2
90	5A	341		21	xxx.xx	-300.00/+300.00	R/W	Value 3
91	5B	342		21	xxx.xx	-300.00/+300.00	R/W	Value 4
92	5C	343		21	xxx.xx	-300.00/+300.00	R/W	Value 5
93	5D	344		21	xxx.xx	-300.00/+300.00	R/W	Value 6
94	5E	345		21	xxx.xx	-300.00/+300.00	R/W	Value 7
95	5F	-		23	xxxxx			
-		346	0			0 1	R/W	Logic 1
-		347	1			0 1	R/W	Logic 2
-		348	2			0 1	R/W	Logic 3
-		349	3			0 1	R/W	Logic 4
-		350	4			0 1	R/W	Logic 5
-		351	5			0 1	R/W	Logic 6
-		352	6			0 1	R/W	Logic 7
-		353	7			0 1	R/W	Logic 8

Block 12

PNO (ID) BINARY	(MN) ASCII	TAG	DATA FORMAT BIT	ASCII	BINARY	LIMITS MIN TO MAX	ACCESS	DESCRIPTION
96	60	312		21	xxxxx		R/W	Pointer for PNO 112
97	61	313		21	xxxxx		R/W	Pointer for PNO 113
98	62	314		21	xxxxx		R/W	Pointer for PNO 114
99	63	315		21	xxxxx		R/W	Pointer for PNO 115
100	64	316		21	xxxxx		R/W	Pointer for PNO 116
101	65	317		21	xxxxx		R/W	Pointer for PNO 117
102	66	318		21	xxxxx		R/W	Pointer for PNO 118
103	67	319		21	xxxxx		R/W	Pointer for PNO 119

Block 13

PNO (ID) BINARY	(MN) ASCII	TAG	DATA FORMAT BIT	ASCII	BINARY	LIMITS MIN TO MAX	ACCESS	DESCRIPTION
104	68	320		21	xxxxx		R/W	Pointer for PNO 120
105	69	321		21	xxxxx		R/W	Pointer for PNO 121
106	6A	322		21	xxxxx		R/W	Pointer for PNO 122
107	6B	323		21	xxxxx		R/W	Pointer for PNO 123
108	6C	324		21	xxxxx		R/W	Pointer for PNO 124
109	6D	325		21	xxxxx		R/W	Pointer for PNO 125
110	6E	326		21	xxxxx		R/W	Pointer for PNO 126
111	6F	327		21	xxxxx		R/W	Pointer for PNO 127

Block 14

PNO (ID) BINARY	(MN) ASCII	TAG	DATA FORMAT BIT	ASCII	BINARY	LIMITS MIN TO MAX	ACCESS	DESCRIPTION
112	70	PNO 96		*	*	*	*	Configurable PNO 0
113	71	PNO 97		*	*	*	*	Configurable PNO 1
114	72	PNO 98		*	*	*	*	Configurable PNO 2
115	73	PNO 99		*	*	*	*	Configurable PNO 3
116	74	PNO 100		*	*	*	*	Configurable PNO 4
117	75	PNO 101		*	*	*	*	Configurable PNO 5
118	76	PNO 102		*	*	*	*	Configurable PNO 6
119	77	PNO 103		*	*	*	*	Configurable PNO 7

Block 15

PNO (ID) BINARY	(MN) ASCII	TAG	DATA FORMAT BIT	ASCII	BINARY	LIMITS MIN TO MAX	ACCESS	DESCRIPTION
120	78	PNO 104		*	*	*	*	Configurable PNO 8
121	79	PNO 105		*	*	*	*	Configurable PNO 9
122	7A	PNO 106		*	*	*	*	Configurable PNO 10
123	7B	PNO 107		*	*	*	*	Configurable PNO 11
124	7C	PNO 108		*	*	*	*	Configurable PNO 12
125	7D	PNO 109		*	*	*	*	Configurable PNO 13
126	7E	PNO 110		*	*	*	*	Configurable PNO 14
127	7F	PNO 111		*	*	*	*	Configurable PNO 15

* = These fields depend upon the destination TAG number

Error Codes

ERROR REPORT (EE)

The EI-BISYNCH Prime Set contains the EE mnemonic. This is also an output parameter in the MAIN PORT (P1), AUX PORT (P2) and SYSTEM PORT (P3) function blocks, where the parameter value can be read and reset. Refer to the COMMS Option Technical Manual for further details.

The parameter displays the last error as a hexadecimal code. The following values are returned if an enquiry (reading information from the Drive) is performed on this Read/Write parameter.

Value	Description
>00C0	No error
>01C7	Invalid mnemonic
>02C2	Checksum (BCC) error
>03C2	Framing or overrun error
>04C8	Attempt to read from a write-only parameter
>05C8	Attempt to write to a read-only parameter
>07C7	Invalid message format
>07C8	Invalid data (encoding error)
>08C8	Data out of range

MMI Menu Map (from Comms Port 3)

1 SETUP PARAMETERS
2 SERIAL LINKS
3 SYSTEM PORT (P3)
- MODE
- GROUP ID (UID)
- UNIT ID (UID)
- ERROR REPORT
- BAUD RATE

Writing any value to this parameter will set the value to >00C0 (No Error). Clearing the last error value may be useful in seeing a repetitive error re-occurring.

Appendix B

Certification

Introduction B-1
Europe B-1
What are the European Directives? B-1
CE Marking for the Low Voltage Directive (LVD) 2006/95/EC B-2
CE Marking for the EMC Directive 2004/108/EC B-2
United States of America & Canada B-4
Compliance B-4
Conditions for Compliance with UL508c B-4
Solid-State Motor Overload Protection B-4
Branch Circuit/Short Circuit Protection Requirements B-5
Short Circuit Rating B-6
Field Wiring Temperature Rating B-6
Operating Ambient Temperature B-6
Field Wiring Terminal Markings B-6
Power and Control Field Wiring Terminals B-6
Field Grounding Terminals B-7
Field Terminal Kits B-7
Recommended Wire Sizes B-8
Field Grounding Terminals B-9
Operating Ambient Temperature B-9
External Power Semiconductor Protection Fuses B-9
Australia & New Zealand B-10
EMC Standards B-10
EMC B-11
Emissions Limits B-11
EMC General Installation Considerations B-13
Earthing Requirements B-13
Increasing Motor Cable Length B-14
Certificates B-15

Introduction

Our Drives are certified as being compliant with the regulated market requirements in:

Europe

Drives are CE certified as being compliant with

- The Low Voltage Directive 2006/95/EC
- The EMC Directive 2004/108/EC

USA

- Underwriters Laboratory Standard UL508c for Power Conversion Equipment

Canada

- Canadian Standards Association C22.2 No.14 for Industrial Control Equipment

Australia & New Zealand

- CTick mark indicating EMC compliance is validated by compliance with the European Harmonised Standards for EMC

Rest of the world

- Compliance may be certified for any countries where certification is based on CISPR (IEC) standards

Europe

What are the European Directives?

The Directives are created to allow manufacturers to trade freely within the EEC territory through technical harmonisation of entire product sectors, and by guaranteeing a high level of protection of public interest objectives. This is done by creating a CE marking CE, a "trade symbol" showing that the technical requirements and those for safety and health are met.

Business and industry are given a wide choice of how to meet their obligations. The European standards bodies have the task of drawing up technical specifications. Compliance with harmonised standards, of which the reference numbers have been published in the Official Journal and which have been transposed into national standards, provides presumption of conformity to the corresponding essential requirements of the EC directives.

Manufacturers are free to choose any other technical solution that provides compliance with the essential requirements. Compliance with harmonised standards remains voluntary and offers one route to complying with these essential requirements.

The Declaration of Conformity signed by the companies nominated Compliance Officer is certification that the apparatus to which it refers meets the requirements of **all** the relevant European directives.

Compliance with harmonised standards provides a "presumption of conformity" and is the route which has been adopted by Parker SSD Drives.

CE Marking for the Low Voltage Directive (LVD) 2006/95/EC

The Low Voltage Directive (LVD) 2006/95/EC[1] seeks to ensure that electrical equipment within certain voltage limits provides both a high level of protection for European citizens and enjoys a Single Market in the European Union. The Directive covers electrical equipment designed for use with a voltage rating of between 50 and 1000V for alternating current and between 75 and 1500V for direct current. For most electrical equipment, the health aspects of emissions of Electromagnetic Fields are also under the domain of the Low Voltage Directive.

The LVD is one of the oldest Single Market Directives which, in broad terms, provides both a conformity assessment procedure to be applied to equipment before being placed on the Market, and Essential Health Safety Requirements (EHSRs) which such equipment must meet either directly or by means of compliance with harmonized standards.

For electrical equipment within its scope, the Directive provides 'The Requirements' with respect to health and safety covering all risks, thus ensuring that electrical equipment is safe in its intended use.

In respect of conformity assessment, there is no third party intervention, as the manufacturer undertakes the conformity assessment. However, there are so-called "Notified Bodies" under the Directive, which may be used to provide reports in response to a challenge by a national authority as to the conformity of the equipment.

When installed in accordance with this manual, the product is CE marked by Parker SSD Drives in accordance with the Low Voltage Directive

Parker SSD Drives' certification (DoC) is supported by tests undertaken in accordance with harmonised standard BS EN61800-5-1

CE Marking for the EMC Directive 2004/108/EC

The aim of the EMC Directive 2004/108/EC[2] is to ensure that any electric or electronic device will create no more then a limited amount of RF interference such that other apparatus are not prevented from functioning correctly, also to ensure that an electric or electronic device will withstand a certain amount of Electro Magnetic interference from within its working environment.

---

1 ***Directive 73/23/EEC has recently been the subject of a codification, requiring a new number 2006/95/EC. Readers should note that the text itself is identical.***

2 ***Directive 89/336/EEC has been superseded by Directive 2004/108/EC which came into effect on 15th December 2004.***

Provisions have been put in place so that:

- Equipment (apparatus [3] and fixed installations [4]) needs to comply with the requirements of the EMC Directive when it is placed on the market and/or taken into service.
- The application of good engineering practice is required for fixed installations, with the possibility for the competent authorities of Member States to impose measures if non-compliances are established.

The directive text makes a clear distinction between the requirements and assessment procedures for apparatus and for fixed installations respectively (fixed installations can include networks and large machines).

- Fixed installations, although they must comply with the protection requirements**,** require neither an EC Declaration of Conformity (DoC) nor CE marking;
- Mobile installations are considered apparatus.

The conformity assessment procedure for apparatus has been simplified to a single procedure. There is no compulsory involvement of a third party, but the manufacturer has the option of presenting his technical documentation to a Notified Body for assessment.

When deviating from the European harmonized standards or not applying them fully, the manufacturer has to perform an EMC assessment and provide detailed documentary evidence that the apparatus complies with the protection requirements of the EMC Directive.

Apparatus intended for a given fixed installation and not otherwise commercially available may be exempt from the requirements and procedures for apparatus (e.g. EC Declaration of Conformity and CE marking), provided that certain

documentation requirements are met, including precautions to be taken in order not to compromise the EMC characteristics of the fixed installation.

BS EN 61800-3 defines the emissions and immunity levels for Power drive systems (PDS) and the main component parts of such a system (Basic drive module and Complete drive module).

The standard defines specific categories of PDS:

PDS of Category C1
PDS of rated voltage less than 1000V, intended for use in the first environment

PDS of Category C2
PDS of rated voltage less than 1000V, which is neither a plug in device nor a movable device and, when used in the first environment, is intended to be installed and commissioned only by a professional.

NOTE a professional is a person or organisation having necessary skills in installing and/or commissioning power drive systems, including their EMC aspects.

---

3 ***'Apparatus' means any finished appliance or combination thereof made commercially available as a single functional unit, intended for the end user and liable to generate electromagnetic disturbance, or the performance of which is liable to be affected by such disturbance.***

4 ***'Fixed installation' means a particular combination of several types of apparatus and where applicable other devices, which are assembled, installed and intended to be used permanently at a predefined location.***

PDS of Category C3
PDS of rated voltage less than 1000V, intended for use in the second environment and not intended for use in the first environment

PDS of Category C4
PDS of rated voltage equal to or above 1000V, or rated current equal to or above 400A, or intended for use in complex systems in the second environment

The drive is generally a category C3 apparatus. Some of the equipments with higher ratings might be classified in Category C4; but for certification, and as an aid to builders of complex system, the emission limits and immunity levels associated with category C3 have been applied.

Parker SSD Drives' certification (DoC) is supported by tests undertaken in accordance with harmonised standard BS EN61800-3

United States of America & Canada

Compliance

The US have many municipalities that have laws, codes or regulations which require a product to be tested by a nationally recognized testing laboratory before it can be sold in their area. Parker SSD Drives adopt the nationally recognised Underwriters Laboratories (UL) mark to demonstrate compliance.

Products are also certified for the Canadian market obtained through UL and their memorandum of understanding with the Canadian Standards Agency (CSA).

Parker SSD Drives obtain product certification to UL508C “Power Conversion Equipment” for the US market, and C22.2 No.14 “Industrial Control Equipment” for the Canadian market.

Conditions for Compliance with UL508c

Solid-State Motor Overload Protection

NOTE **An external motor overload protective device must be provided by the installer.**

The maximum internal overload protection level (current limit) is 150% for 30 seconds and 200% for 10 seconds.

Motor overload protection is provided by means of the thermal device in the motor winding. This protection cannot be evaluated by UL, hence it is the responsibility of the installer and/or the local inspector to determine whether the overload protection is in compliance with the National Electrical Code or Local Code requirements.

Branch Circuit/Short Circuit Protection Requirements

The controller requires branch circuit protection. Branch circuit protection requirements must be in accordance with the latest addition of the National Electrical Code, NEC/NFPA-70.

UL Recognized Component (JFHR2) semiconductor fuses with current ratings and maximum I^2t ratings as specified below must be used in the controller. Refer to the table below for the recommended fuse manufacturer and part number.

Motor HP @ 500V dc	Controller Rating (A)	Input Line Semiconductor Fuses			
		Ratings			Part No. Gould or equivalent*
		(Vac)	(A)	I^2t (A^2s)	
7.5	15	500	31.3	750	A60Q35
20	35	500	31.3	750	A60Q35
20	40	500	31.3	750	A60Q35
30	70	500	71.6	1300	A50QS80-4R
40	70	500	71.6	1300	A50QS80-4R
50	110	500	111.8	2860	A50QS125-4R
60	110	500	111.8	2860	A50QS125-4R
75	165	500	156.6	7540	A50QS200-4R
100	165	500	156.5	7540	A50QS200-4R
50 ●	180	500	?	?	
150	270	500	?	?	
					Part No. Bussmann or equivalent*
200	380	660	550	135000	170M6809
300	500	660	700	300000	170M6811
400	725	660	900	670000	170M6813
500	830	660	1000	945000	170M6814
900	1580	660	2 x 1000	945000	170M6814

* Other UL Recognized Component (JFHR2) semiconductor fuses may be used in the controller provided that the voltage, ampere and I^2t ratings shown above are not exceeded.

● Rated armature voltage: 240V dc

NOTE **Semiconductor fuses are acceptable as branch circuit short-circuit protection for the solid-state motor controllers only.**

Table B- 1 Short Circuit Protection Requirements

Short Circuit Rating

These products are suitable for use on a circuit capable of delivering not more than (the value shown in Table 12-2) RMS Symmetrical Amperes, 500V maximum.

Output Ratings		Short Circuit Rating
(A)	(kW) 500V	RMS Symmetrical Amperes
15	7.5	5,000
35	15	5,000
40	15	10,000
70	30	10,000
110	45	10,000
165	75	10,000
380	150	18000
500	225	18000
725	327	30000
830	335	30000
1580	650	85000

Table B- 2 Short Circuit Ratings

Field Wiring Temperature Rating

Use 75°C copper conductors only.

Operating Ambient Temperature

For the operating ambient temperature range, refer to Appendix E: “Technical Specifications” - Environmental Details.

Field Wiring Terminal Markings

For the correct field wiring connections that are to be made to each terminal, refer to Chapter 3: “Installing the Drive” - Electrical Installation.

Power and Control Field Wiring Terminals

For the correct tightening torque value, refer to Appendix E: “Technical Specifications”.

Field Grounding Terminals

The field grounding terminal(s) is identified with the International Grounding Symbol (IEC) Publication 417, Symbol 5019.

Field Terminal Kits

UL compliant terminal kits are available for the connection of power wiring for the following Drive ratings. These terminals must be applied with the correct tooling as described in the Installation Instructions provided with each terminal kit.

Kit Part Number	Controller Rating (A)	Number of Lugs	Purpose	Lugs per Terminal	Wire Size per Lug	Cable Rating
LA386000U380	380	3 2	AC DC	1 1	2 x 4/0 AWG 2 x 250kcmil	230A 255A
LA386000U500	500	3 2	AC DC	1 1	2 x 300kcmil 2 x 350kcmil	285A 310A
LA386000U725	725	3 4	AC DC	1 2	2 x 600kcmil 2 x 4/0 AWG	420A 230A
LA386000U830	830	6 4	AC DC	2 2	2 x 250kcmil 2 x 300kcmil	255A 285A

NOTE **1580A controller requires two LA386000U830 kits.**

Recommended Wire Sizes

North American wire sizes (AWG) are based on NEC/NFPA-70 for ampacities of thermoplastic-insulated (75ºC) copper conductors assuming not more than three current-carrying conductors in raceway or cable, based on ambient temperature of 40ºC. The wire sizes allow for an ampacity of 125% of the rated input and output amperes for motor branch-circuit conductors as specified in NEC/NFPA-70.

The table below gives the wire sizes for the input (supply) and output (motor) wiring. The table includes the rated input and output amperes for each model at 460V or 575V operation.

Recommended Wire Sizes (Frames 1, 2, 3, 4 & 5)

Main power wiring. Local wiring regulations always take precedence.

		Input			Output	
Drive Size (A)	Input Current (A)	Number of Conductors	North American Wire Size	Output Current (A)	Number of Conductors	North American Wire Size
Frame 1						
15	13.5	1	12 AWG	15	1	12 AWG
35	28.35	1	8 AWG	35	1	8 AWG
Frame 2						
40	36	1	8 AWG	40	1	8 AWG
70	63	1	1 AWG	70	1	3 AWG
110	99	1	1 AWG	110	1	1/0 AWG
165	148.5	1	3/0 AWG	165	1	4/0 AWG
Frame 3						
180	162	1	4/0 AWG	180	1	4/0 AWG
270	243	1	350 Kcmil	270	1	500 Kcmil
Frame 4 & 5						
380	342	1	700 Kcmil	380	1	750 Kcmil
500	450	1	1250 Kcmil	500	1	1500 Kcmil
725	653	1	3 inch bus bar	725	1	3 inch bus bar
830	747	1	3 inch bus bar	830	1	4 inch bus bar
1580	1427	2	4 inch bus bar	1580	2	4 inch bus bar

Recommended Wire Sizes (Frame 6)

Local wiring regulations always take precedence.

		Input				Output	
Description	Drive Size (A)	Input Current (A)	Number of Conductors	North American Wire Size (Kcmil)	Output Current (A)	Number of Conductors	North American Wire Size (Kcmil)
Main Power	1250	1125	4	500	1250	4	500
	1650	1485	6	400	1650	6	500
	1950	1755	6	500	1950	6	600
Field	60	60	1	AWG 8	60	1	AWG 8

Recommended Wire Sizes (Frame H)

Local wiring regulations always take precedence.

		Input				Output	
Description	Drive Size (A)	Input Current (A)	Number of Conductors	North American Wire Size (Kcmil)	Output Current (A)	Number of Conductors	North American Wire Size (Kcmil)
Main Power	1200	1100	4	500	1200	4	500
	1700	1550	6	400	1700	6	500
	2200	2000	6	600	2200	6	700
	2700	2450	6	900	2700	8	700
Field	60	60	1	AWG 8	60	1	AWG 8

Field Grounding Terminals

The field grounding terminals are identified with the International Grounding Symbol ⏚ (IEC Publication 417, Symbol 5019).

Operating Ambient Temperature

0°C to 40°C (32°F to 104°F), derate up to a maximum of 50°C. Derate linearly at 1% per degree centigrade for temperature exceeding the maximum rating ambient for the drive.

External Power Semiconductor Protection Fuses

For details on these input fuses, refer to Appendix E: "Technical Specifications".

Australia & New Zealand

A Mutual Recognition Agreement in relation to conformity assessment, certificates and markings between Australia and the European Community was signed on June 1, 1998 and entered into force on January 1, 1999. Sectoral Annexes of the MRA cover: medicinal products, medical devices, telecommunications terminal equipment, low voltage equipment (i.e. electrical safety), electromagnetic compatibility (EMC), machinery, pressure equipment and automotive products.

EMC Standards

Extract from Mandatory Australian Communications Authority standards.

Product	European	International	AS/NZS
Industrial, scientific, and medical (ISM) equipment	EN 55011	CISPR 11	2064 Note 3
Information technology equipment	EN 55022	CISPR 22	3548 Note 2
Generic (residential, commercial, and light industry)	EN 50081.1	IEC 61000-6-3	4251.1
Generic (industrial environments)	EN 50081-2	IEC 61000-6-4	4251.2
Adjustable speed electrical power drive systems	EN 61800-3	IEC 61800-3	0

Parker SSD certification (DoC) is supported by tests undertaken in accordance with harmonised standard BS EN61800-3

EMC

Emissions Limits

Conducted

Frequency (MHz)	DB (µV)		Product Specific
	Quasi Peak	Average	EN 61800-3
where I ≤100A 0.15 - 0.5 0.5 - 5.0 5.0 - 30.0 *decreasing with log of frequency to:*	100 86 90 70	90 76 80 60	Category C3 Table 17
where I ≥100A 0.15 - 0.5 0.5 - 5.0 5.0 - 30.0	130 125 115	120 115 105	

Harmonics (Low Frequency Emissions)

I < 75A 61000-3-12
I > 75A 61000-3-4

Harmonic emmisions for DC drive installations cannot be predicted here as they are determined by motor parameters that are installation dependent. For help in determining the harmonics contact Parker SSD.

Where these levels are too high and to ensure compatibility with other equipment, EMC filters are available from Parker SSD Drives.

Radiated

Frequency (MHz)	DB (µV)	Product Specific
	Quasi Peak	EN 61800-3
30≤ f- ≤230 230≤ f- ≤1000	50 60	Category C3 (Table 18) Measured at 10m

Where these levels are too high and to ensure compatibility with other equipment, Parker SSD Drives can advise on suitable counter-measures.

EMC Immunity Levels

Port	Phenomenon	Basic standard for test method	Level	Performance (acceptance criterion)
Enclosure port	ESD	IEC 61000-4-2	4 kV CD or 8 kV AD if CD impossible	B
	Radio-frequency electromagnetic field, amplitude modulated.	IEC 61000-4-3 see also 5.3.4	80 MHz to 1000 Mhz 10 V/m 80% AM (1 kHz)	A
Power ports	Fast transient-burst	IEC 61000-4-4	2 kV/5 kHz [a]	B
	Surge [b] 1,2/50 µs, 8/20 µs	IEC 61000-4-5	1 kV [c] 2 kV [d]	B
	Conducted radio-frequency common mode [e]	IEC 61000-4-6 see also 5.3.4	0,15 MHz to 80 MHz 10 V 80 % AM (1 kHz)	A
Power interfaces	Fast transient-burst [e]	IEC 61000-4-4	2 kV/5 kHz Capacitive clamp	B
Signal interfaces	Fast transient-burst [e]	IEC 61000-4-4	1 kV/5 kHz Capacitive clamp	B
	Conducted radio-frequency common mode [e]	IEC 61000-4-6 see also 5.3.4	0,15 MHz to 80 MHz 10 V 80 % AM (1 kHz)	A
Ports for process measurement control lines	Fast transient-burst [e]	IEC 61000-4-4	2 kV/5 kHz Capacitive clamp	B
	Surge [f] 1,2/50 µs, 8/20 µs	IEC 61000-4-5	1 kV [d,f]	B
	Conducted radio-frequency common mode [e]	IEC 61000-4-6 see also 5.3.4	0,15 MHz to 80 MHz 10 V 80 % AM (1 kHz)	A

CD : contact discharge AD : air discharge AM : amplitude modulation

[a] Power ports with current rating < 100 A: direct coupling using the coupling and decoupling network. Power ports with current rating ≥ 100 A: direct coupling or capacitive clamp without decoupling network. If the capacitive clamp is used, the test level shall be 4 kV/2,5 kHz.

[b] Applicable only to power ports with current consumption , 63 A during light load test conditions as specified in 5.1.3. The rated impulse voltage of the basic insulation shall not be exceeded (see IEC 60664-1).

[c] Coupling line-to-line.

[d] Coupling line-to-earth.

[e] Applicable only to ports or interfaces with cables whose total length according to the manufacturer's functional specification may exceed 3 m.

[f] Applicable only to ports with cables whose total length according to the manufacturer's functional specification may exceed 30 m. In the case of a shielded cable, a direct coupling to the shield is applied. This immunity requirement does not apply to fieldbus or other signal interfaces where the use of surge protection devices is not practical for technical reasons. The test is not required where normal functioning cannot be achieved because of the impact of the coupling/decoupling network on the equipment under test (EUT).

Table B- 3 Minimum immunity requirements for PDSs intended for use in the second environment

EMC General Installation Considerations

Earthing Requirements

IMPORTANT ***Protective earthing always takes precedence over EMC screening.***

Protective Earth (PE) Connections

NOTE **In accordance with installations to EN60204, only one protective earth conductor is permitted at each protective earth terminal contacting point.**

Local wiring regulations tale precedence and may require the protective earth connection of the motor to be connected locally, i.e. not as specified in these instructions. This will not cause shielding problems because of the relatively high RF impedance of the local earth connection.

EMC Earth Connections

For compliance with EMC requirements, we recommend that the "0V/signal ground" be separately earthed. When a number of units are used in a system, these terminals should be connected together at a single, local earthing point.

Control and signal cables for the encoder, all analogue inputs, and communications require screening with the screen connected only at the VSD (Variable Speed Drive) end. However, if high frequency noise is still a problem, earth the screen at the non-VSD end via a 0.1µF capacitor.

NOTE **Connect the screen (at the VSD end) to the VSD protective earth point, and not to the control board terminals.**

Cabling Requirements

Planning Cable Runs

- Use the shortest possible motor cable lengths.
- Use a single length of cable to a star junction point to feed multiple motors.
- Keep electrically noisy and sensitive cables apart.
- Keep electrically noisy and sensitive parallel cable runs to a minimum. Separate parallel cable runs by at least 0.25 metres. For runs longer than 10 metres, separation should be increased proportionally. For example if the parallel runs were 50m, then the separation would be (50/10) x 0.25m = 1.25m.
- Sensitive cables should cross noisy cables at 90°.
- Never run sensitive cables close or parallel to the motor, dc link and braking chopper circuit for any distance.
- Never run supply, dc link or motor cables in the same bundle as the signal/control and feedback cables, even if they are screened.
- Ensure EMC filter input and output cables are separately routed and do not couple across the filter.

Increasing Motor Cable Length

Because cable capacitance and hence conducted emissions increase with motor cable length, conformance to EMC limits is only guaranteed with the specified ac supply filter option up to a maximum cable length as specified in Appendix E: “Technical Specifications".

This maximum cable length can be improved using the specified external input or output filters.

Screened/armoured cable has significant capacitance between the conductors and screen, which increases linearly with cable length (typically 200pF/m but varies with cable type and current rating).

Long cable lengths may have the following undesirable effects:

- Tripping on `overcurrent’ as the cable capacitance is charged and discharged at the switching frequency.
- Producing increased conducted emissions that degrade the performance of the EMC filter due to saturation.
- Causing RCDs (Residual Current Devices) to trip due to increased high frequency earth current.
- Producing increased heating inside the EMC ac supply filter from the increased conducted emissions.

These effects can be overcome by adding chokes or output filters at the output of the VSD.

Certificates

DC590+

CE

EC Declarations of Conformity

Date CE marked first applied: 01.04.2001

Issued for compliance with the EMC Directive when the unit is used as *relevant apparatus*.

EMC Directive

In accordance with the EEC Directive 2004/108/EC
We Parker SSD Drives, address as below, declare under our sole responsibility that the above Electronic Products when installed and operated with reference to the instructions in the Product Manual (provided with each piece of equipment) is in accordance with the relevant clauses from the following standard:-
* BSEN61800-3 (2004)

Low Voltage Directive

In accordance with the EEC Directive 2006/95/EC
We Parker SSD Drives, address as below, declare under our sole responsibility that the above Electronic Products when installed and operated with reference to the instructions in the Product Manual
(provided with each piece of equipment), is in accordance with the relevant clauses from the following standard :-
EN50178 (1993)

The drive is CE marked in accordance with the low voltage directive for electrical equipment and appliances in the voltage range when installed correctly.

Manufacturers Declarations

This is provided to aid your justification for EMC compliance when the unit is used as a *component.*

EMC Declaration

We Parker SSD Drives, address as below, declare under our sole responsibility that the above Electronic Products when installed and operated with reference to the instructions in the Product Manual (provided with each piece of equipment) is in accordance with the relevant clauses from the following standard:-
* BSEN61800-3 (2004)

Machinery Directive

The above Electronic Products are components to be incorporated into machinery and may not be operated alone.
The complete machinery or installation using this equipment may only be put into service when the safety considerations of the Directive 89/392/EEC are fully adhered to.
Particular reference should be made to EN60204-1 (Safety of Machinery - Electrical Equipment of Machines).
All instructions, warnings and safety information of the Product Manual must be adhered to.

Since the potential hazards are mainly electrical rather than mechanical, the drive does not fall under the machinery directive. However, we do supply a manufacturer's declaration for when the drive is used (as a *component*) in machinery.

M. Payn

Dr Martin Payn (Conformance Officer)

** Compliant with the immunity requirements of the Standard without specified EMC filters.*

PARKER SSD DRIVES
NEW COURTWICK LANE, LITTLEHAMPTON, WEST SUSSEX BN17 7RZ
TELEPHONE: +44(0)1903 737000 FAX: +44(0)1903 737100
Registered Number: 4806503 England. Registered Office: 55 Maylands Avenue, Hemel Hempstead, Herts HP2 4SJ

Appendix C

Parameter Specification Tables

Details for all parameters provided on the Keypad.

Parameter Tables C-1
Specification Table: Tag Number Order C-2
Parameter Table: MMI Menu Order C-36

Parameter Tables

The headings for the Tag No. table are described below.

Tag	A numeric identification of the parameter. It is used to identify the source and destinations of internal links.
Mn	Serial Communications Mnemonic: Refer to Appendix A: "Serial Communications"
MMI Block Name	The menu page under which the parameter is stored on the MMI.
MMI Parameter Name	The parameter name as it appears on the MMI.
Minimum/Maximum/ Default/Units/Range	The Range varies with parameter type: INT The upper and lower limits of the parameter, indicating the parameter's true, internally-held, number of decimal. ***Note:*** Decimal Places **- some internally held parameters with two decimal places are only displayed with one decimal place. These parameters are indicated in the Parameter Description tables. The Range parameter highlights these with "(h)".** BOOL 0 = FALSE, 1 = TRUE WORD 0x0000 to 0xFFFF (hexadecimal)
Notes	Output parameters are not saved in non-vol memory unless noted otherwise. Input parameters are saved in non-vol memory unless noted otherwise. **View levels:** V0 Normal V1 Advanced **Write qualifiers:** W0 Always W1 Only when stopped W2 Only when in configuration mode W3 Only in thee-button reset mode W4 Read only, (output parameters)

Parameter Types:

Parameters that look like 0x0000 are WORDS

Parameters that have text are BOOLs if they have a range of 0,1

Parameters that have text are WORDS if their range is 0 to greater than 1

All other parameters are INT (integers)

If a parameter can only be written to in Config mode, this implies that the drive is stopped.

Specification Table: Tag Number Order

Tag	Mn	MMI Block Name	MMI Parameter Name	Minimum	Maximum	Default	Units	Range	Notes	
2	a2	RAMPS	RAMP ACCEL TIME	0.1	600.0	10.0	s		V0	W0
3	a3	RAMPS	RAMP DECEL TIME	0.1	600.0	10.0	s		V0	W0
5	a5	MIN SPEED	RAMP INPUT	-105.00	105.00	0.00	%		V1	W0
6	a6	SETPOINT SUM 1	RATIO 1	-3.0000	3.0000	1.0000			V0	W0
7	a7	SPEED LOOP	RATIO 2 (A3)	-3.0000	3.0000	1.0000			V0	W0
8	a8	SETPOINT SUM 1	SIGN 1	0	1	1		0: NEGATIVE 1: POSITIVE	V1	W0
9	a9	SPEED LOOP	SIGN 2 (A3)	0	1	1		0: NEGATIVE 1: POSITIVE	V0	W0
10	aa	CALIBRATION	ZERO SPD. OFFSET	-5.00	5.00	0.00	%		V0	W0
11	ab	STANDSTILL	STANDSTILL LOGIC	0	1	0		0: DISABLED 1: ENABLED	V0	W0
12	ac	STANDSTILL	ZERO THRESHOLD	0.00	100.00	2.00	%		V0	W0
13	ad	SPEED LOOP	SPD.INT.TIME	0.001	30.000	0.500	s		V0	W0
14	ae	SPEED LOOP	SPD.PROP.GAIN	0.00	200.00	10.00			V0	W0
15	af	CURRENT LOOP	CUR.LIMIT/SCALER	0.00	200.00	100.00	%		V0	W0
16	ag	CURRENT LOOP	PROP. GAIN	0.00	200.00	45.00			V0	W0
17	ah	CURRENT LOOP	INT. GAIN	0.00	200.00	3.50			V0	W0
18	ai	AUTOTUNE	AUTOTUNE	0	2	0		0: OFF 1: ARMATURE 2: FIELD	V0	W0
19	aj	ALARMS	FIELD FAIL	0	1	0		0: ENABLED 1: INHIBITED	V0	W0
20	ak	CALIBRATION	ARMATURE V CAL.	0.9800	1.1000	1.0000			V0	W0
21	al	CALIBRATION	IR COMPENSATION	0.00	100.00	0.00	%		V0	W0
22	am	ENCODER 1	ENCODER RPM	0	6000	1000	RPM		V0	W1
23	an	CALIBRATION	ANALOG TACH CAL	0.9800	1.1000	1.0000			V0	W0
24	ao	ENCODER 1	ENCODER LINES	10	5000	1000			V0	W1
25	ap	CALIBRATION	ARMATURE I (A9)	0	1	1		0: UNIPOLAR 1: BIPOLAR	V0	W0
26	aq	STOP RATES	PROG STOP TIME	0.1	600.0	0.1	s		V0	W0
27	ar	STOP RATES	STOP TIME	0.1	600.0	10.0	s		V0	W0

Tag	Mn	MMI Block Name	MMI Parameter Name	Minimum	Maximum	Default	Units	Range	Notes	
28	as	ALARMS	STALL TRIP	0	1	0		0: ENABLED 1: INHIBITED	V1	W0
29	at	STOP RATES	STOP ZERO SPEED	0.00	100.00	2.00	%		V0	W0
30	au	CURRENT LOOP	ADDITIONAL DEM	-200.00	200.00	0.00	%		V1	W0
31	av	CURRENT PROFILE	SPD BRK2 (HIGH)	0.0	100.0	100.0	%		V0	W1
32	aw	CURRENT PROFILE	SPD BRK1 (LOW)	0.0	100.0	100.0	%		V0	W1
33	ax	CURRENT PROFILE	IMAX BRK2(SPD2)	0.0	200.0	200.0	%		V0	W1
37	b1	MENUS	VIEW LEVEL	0	2	1		0: BASIC 1: STANDARD 2: ADVANCED	V0	W0
39	b3	CONFIGURE DRIVE	CONFIGURE ENABLE	0	1	0		0: DISABLED 1: ENABLED	V0	W1
41	b5	SPEED LOOP	SETPOINT 4	-105.00	105.00	0.00	%		V0	W0
42	b6	CURRENT LOOP	AT CURRENT LIMIT	0	1	0			V1	W4
43	b7	DIGITAL OUTPUT 1	MODULUS	0	1	1			V0	W0
44	b8	DIGITAL OUTPUT 2	MODULUS	0	1	1			V0	W0
45	b9	DIGITAL OUTPUT 3	MODULUS	0	1	1			V0	W0
47	bb	SPEED LOOP	SPEED FBK SELECT	0	4	0		0: ARM VOLTS FBK 1: ANALOG TACH 2: ENCODER 3: ENCODER/ANALOG 4: ENCODER 2	V0	W1
48	bc	CURRENT LOOP	NEG. I CLAMP IN	-200.00	200.00	-200.00	%		V1	W0
49	bd	ENCODER 1	ENCODER SIGN	0	1	1		0: NEGATIVE 1: POSITIVE	V0	W1
50	be	ANALOG INPUT 1	ANIN 1 (A2)	0.00	0.00	0.00	V		V1	W4
51	bf	ANALOG INPUT 2	ANIN 2 (A3)	0.00	0.00	0.00	V		V1	W4
52	bg	ANALOG INPUT 3	ANIN 3 (A4)	0.00	0.00	0.00	V		V1	W4
53	bh	ANALOG INPUT 4	ANIN 4 (A5)	0.00	0.00	0.00	V		V1	W4
54	bi	ANALOG INPUT 5	ANIN 5 (A6)	0.00	0.00	0.00	V		V1	W4
55	bj	ANALOG OUTPUT 1	ANOUT 1 (A7)	0.0	0.0	0.0	V		V1	W4
56	bk	ANALOG OUTPUT 2	ANOUT 2 (A8)	0.0	0.0	0.0	V		V1	W4
57	bl	CALIBRATION	TERMINAL VOLTS	0.0	0.0	0.0	%		V1	W4
58	bm	CALIBRATION	UNFIL.TACH INPUT	0.0	0.0	0.0	%		V0	W4
59	bn	ENCODER 1	UNFIL.ENCODER	0	0	0	RPM		V0	W4
60	bo	CALIBRATION	BACK EMF	0.0	0.0	0.0	%		V0	W4

Tag	Mn	MMI Block Name	MMI Parameter Name	Minimum	Maximum	Default	Units	Range	Notes	
61	bp	CURRENT LOOP	ACTUAL NEG I LIM	0.0	0.0	0.0	%		V0	W4
62	bq	SPEED LOOP	UNFIL.SPD.FBK	0.00	0.00	0.00	%		V0	W4
63	br	SPEED LOOP	SPEED SETPOINT	0.00	0.00	0.00	%		V0	W4
64	bs	SPEED LOOP	UNFIL.SPD.ERROR	0.00	0.00	0.00	%		V0	W4
65	bt	CURRENT LOOP	IaFbk UNFILTERED	0.0	0.0	0.0	%		V0	W4
66	bu	CURRENT LOOP	IaDmd UNFILTERED	0.0	0.0	0.0	%		V0	W4
67	bv	CURRENT LOOP	ACTUAL POS I LIM	0.0	0.0	0.0	%		V0	W4
68	bw	SEQUENCING	START (C3)	0	1	0		0: OFF 1: ON	V1	W4
69	bx	DIGITAL INPUT 4	DIGITAL INPUT C4	0	1	0		0: OFF 1: ON	V1	W4
70	by	DIGITAL INPUT 5	DIGITAL INPUT C5	0	1	0		0: OFF 1: ON	V1	W4
71	bz	DIGITAL INPUT 1	DIGIN 1 (C6)	0	1	0		0: OFF 1: ON	V1	W4
72	c0	DIGITAL INPUT 2	DIGIN 2 (C7)	0	1	0		0: OFF 1: ON	V1	W4
73	c1	DIGITAL INPUT 3	DIGIN 3 (C8)	0	1	0		0: OFF 1: ON	V1	W4
74	c2	DIGITAL OUTPUT 1	DIGOUT 1 (B5)	0	1	0		0: OFF 1: ON	V1	W4
75	c3	DIGITAL OUTPUT 2	DIGOUT 2 (B6)	0	1	0		0: OFF 1: ON	V1	W4
76	c4	DIGITAL OUTPUT 3	DIGOUT 3 (B7)	0	1	0		0: OFF 1: ON	V1	W4
77	c5	STANDSTILL	AT ZERO SPEED	0	1	0			V0	W4
78	c6	STANDSTILL	AT ZERO SETPOINT	0	1	0			V1	W4
79	c7	STANDSTILL	AT STANDSTILL	0	1	0			V1	W4
80	c8	SEQUENCING	PROGRAM STOP	0	1	0			V1	W4
81	c9	ALARMS	SPEED FBK ALARM	0	1	0		0: ENABLED 1: INHIBITED	V0	W0
82	ca	SEQUENCING	DRIVE START	0	1	0		0: OFF 1: ON	V0	W4
83	cb	SEQUENCING	CONTACTOR CLOSED	0	1	0			V0	W4
84	cc	SEQUENCING	DRIVE ENABLE	0	1	0			V0	W4
85	cd	RAMPS	RAMP OUTPUT	0.00	0.00	0.00	%		V1	W4

Tag	Mn	MMI Block Name	MMI Parameter Name	Minimum	Maximum	Default	Units	Range	Notes	
86	ce	SETPOINT SUM 1	SPT SUM OUTPUT	0.00	0.00	0.00	%		V1	W4
87	cf	CURRENT LOOP	POS. I CLAMP	0.0	0.0	0.0	%		V1	W4
88	cg	CURRENT LOOP	NEG. I CLAMP	0.0	0.0	0.0	%		V1	W4
89	ch	SPEED LOOP	SPEED DEMAND	0.00	0.00	0.00	%		V0	W4
90	ci	CURRENT LOOP	BIPOLAR CLAMPS	0	1	0		0: DISABLED 1: ENABLED	V1	W0
91	cj	STOP RATES	PROG STOP I LIM	0.00	200.00	100.00	%		V0	W0
92	ck	ALARMS	ENCODER ALARM	0	1	0		0: ENABLED 1: INHIBITED	V0	W0
93	cl	CURRENT PROFILE	IMAX BRK1(SPD1)	0.0	200.0	200.0	%		V0	W1
94	cm	AUX I/O	AUX DIGOUT 1	0	1	0		0: OFF 1: ON	V0	W0
95	cn	AUX I/O	AUX DIGOUT 2	0	1	0		0: OFF 1: ON	V0	W0
96	co	AUX I/O	AUX DIGOUT 3	0	1	0		0: OFF 1: ON	V0	W0
97	cp	LINK 13	SOURCE TAG	-1276	1276	77			V0	W2
98	cq	LINK 14	SOURCE TAG	-1276	1276	122			V0	W2
99	cr	LINK 15	SOURCE TAG	-1276	1276	125			V0	W2
100	cs	DEADBAND	INPUT 1	-200.00	200.00	0.00	%		V1	W0
102	cu	LINK 20	DESTINATION TAG	0	1276	90			V0	W2
103	cv	DIGITAL INPUT 1	VALUE FOR TRUE	-300.00	300.00	0.01	%		V0	W0
104	cw	DIGITAL INPUT 1	VALUE FOR FALSE	-300.00	300.00	0.00	%		V0	W0
105	cx	LINK 21	DESTINATION TAG	0	1276	118			V0	W2
106	cy	DIGITAL INPUT 2	VALUE FOR TRUE	-300.00	300.00	0.01	%		V0	W0
107	cz	DIGITAL INPUT 2	VALUE FOR FALSE	-300.00	300.00	0.00	%		V0	W0
108	d0	LINK 22	DESTINATION TAG	0	1276	119			V0	W2
109	d1	DIGITAL INPUT 3	VALUE FOR TRUE	-300.00	300.00	0.01	%		V0	W0
110	d2	DIGITAL INPUT 3	VALUE FOR FALSE	-300.00	300.00	0.00	%		V0	W0
111	d3	ALARMS	5703 RCV ERROR	0	1	0		0: ENABLED 1: INHIBITED	V0	W0
112	d4	ALARMS	STALL TRIP	0	1	0		0: OK 1: FAILED	V1	W4
113	d5	RAMPS	RAMPING	0	1	0			V1	W4

Tag	Mn	MMI Block Name	MMI Parameter Name	Minimum	Maximum	Default	Units	Range	Notes	
114	d6	SEQUENCING	SEQ STATE	0	15	0		0: SEQ INIT 1: SEQ INIT 2: SEQ HOLD 3: SEQ STANDBY 4: SEQ PRE READY 5: SEQ READY 6: SEQ AUTOTUNING 7: SEQ RUN 8: SEQ AT ZERO SPD. 9: SEQ QUENCH 10: SEQ PROGRAM STOP 11: SEQ STOP 12: SEQ DELAY STOP 13: SEQ COAST STOP 14: SEQ ERROR 15: CURRENT DECAY	V0	W4
115	d7	ALARMS	HEALTH WORD	0x0000	0xFFFF	0x0000			V1	W4
116	d8	ALARMS	HEALTH STORE	0x0000	0xFFFF	0x0000			V1	W4
118	da	RAMPS	RAMP HOLD	0	1	0		0: OFF 1: ON	V1	W0
119	db	CURRENT LOOP	I DMD. ISOLATE	0	1	0		0: DISABLED 1: ENABLED	V1	W0
120	dc	MENUS	ENTER PASSWORD	0x0000	0xFFFF	0x04D2			V0	W0
121	dd	MENUS	CHANGE PASSWORD	0x0000	0xFFFF	0x0000			V1	W0
122	de	ALARMS	HEALTH LED	0	1	0			V0	W4
125	dh	SEQUENCING	READY	0	1	0			V0	W4
126	di	MIN SPEED	MIN SPEED	0.00	100.00	0.00	%		V1	W0
128	dk	AUX I/O	ANOUT 1	-100.00	100.00	0.00	%		V0	W0
129	dl	AUX I/O	ANOUT 2	-100.00	100.00	0.00	%		V0	W0
130	dm	COMMS PORT 3	MODE	0	4	3		0: DISABLED 1: 5703 MASTER 2: 5703 SLAVE 3: EIASCII 4: EIBINARY	V0	W0
131	dn	DEADBAND	DEADBAND WIDTH	0.0	100.0	0.0	%		V0	W0
132	do	5703 IN	SETPT. RATIO	-3.0000	3.0000	0.0000			V0	W0

Tag	Mn	MMI Block Name	MMI Parameter Name	Minimum	Maximum	Default	Units	Range	Notes	
133	dp	5703 IN	SETPT. SIGN	0	1	1		0: NEGATIVE 1: POSITIVE	V0	W0
134	dq	LINK 16	SOURCE TAG	-1276	1276	89			V0	W2
135	dr	LINK 45	DESTINATION TAG	0	1276	41			V0	W2
137	dt	CURRENT LOOP	DISCONTINUOUS	0.00	200.00	12.00	%		V0	W0
155	eb	DRIVE INFO	VERSION NUMBER	0x0000	0xFFFF	0x0000			V0	W4
158	ee	COMMS PORT 2	ERROR REPORT	0x0000	0xFFFF	0x00C0			V0	W0
161	eh	SEQUENCING	AUX START	0	1	1		0: OFF 1: ON	V0	W0
162	ei	CONFIGURE DRIVE	EMULATE 590P	0x0000	0xFFFF	0x0001			V1	W2
168	eo	SEQUENCING	AUX ENABLE	0	1	1		0: OFF 1: ON	V0	W0
169	ep	FIELD CONTROL	FIELD ENABLED	0	1	0		0: DISABLED 1: ENABLED	V0	W4
170	eq	FIELD CONTROL	FIELD ENABLE	0	1	1		0: DISABLED 1: ENABLED	V0	W1
171	er	FIELD CONTROL	SETPOINT	0.00	100.00	100.00	%		V1	W0
172	es	FIELD CONTROL	INT. GAIN	0.00	100.00	1.28			V0	W0
173	et	FIELD CONTROL	PROP. GAIN	0.00	100.00	0.10			V0	W0
174	eu	FIELD CONTROL	FLD. WEAK ENABLE	0	2	0		0: DISABLED 1: STANDARD 2: ADVANCED	V0	W1
175	ev	FIELD CONTROL	EMF LEAD	0.10	50.00	2.00			V0	W0
176	ew	FIELD CONTROL	EMF LAG	0.00	200.00	40.00			V0	W0
177	ex	FIELD CONTROL	EMF GAIN	0.00	100.00	0.30			V0	W0
178	ey	FIELD CONTROL	MAX VOLTS	0.00	100.00	100.00	%		V0	W0
179	ez	FIELD CONTROL	MIN FLD.CURRENT	0.00	100.00	90.00	%		V0	W1
180	f0	ALARMS	SPDFBK ALM LEVEL	0.0	100.0	50.0	%		V1	W0
181	f1	FEEDBACKS	UNFIL.FIELD FBK	0.00	0.00	0.00	%		V0	W4
182	f2	CALIBRATION	FIELD I CAL.	0.9800	1.1000	1.0000			V0	W0
183	f3	FIELD CONTROL	FIELD DEMAND	0.00	0.00	0.00	%		V1	W4
184	f4	FIELD CONTROL	FLD.FIRING ANGLE	0.00	0.00	0.00	DEG		V1	W4
185	f5	FIELD CONTROL	FLD.QUENCH DELAY	0.0	600.0	0.0	s		V1	W0
186	f6	FIELD CONTROL	FLD. QUENCH MODE	0	1	0		0: QUENCH 1: STANDBY	V1	W0

Tag	Mn	MMI Block Name	MMI Parameter Name	Minimum	Maximum	Default	Units	Range	Notes	
187	f7	5703 IN	RAW INPUT	0.00	0.00	0.00	%		V0	W4
189	f9	5703 IN	SCALED INPUT	0.00	0.00	0.00	%		V0	W4
191	fb	FIELD CONTROL	BEMF FBK LEAD	20	5000	100			V0	W0
192	fc	FIELD CONTROL	BEMF FBK LAG	20	5000	100			V0	W0
195	ff	DIGITAL OUTPUT 1	THRESHOLD (>)	-300.00	300.00	0.00	%		V0	W0
196	fg	DIGITAL OUTPUT 2	THRESHOLD (>)	-300.00	300.00	0.00	%		V0	W0
197	fh	DIGITAL OUTPUT 3	THRESHOLD (>)	-300.00	300.00	0.00	%		V0	W0
198	fi	COMMS PORT 3	BAUD RATE	0	9	5		0: 300 1: 600 2: 1200 3: 2400 4: 4800 5: 9600 6: 19200 7: 38400 8: 57600 9: 115200	V0	W0
201	fl	CURRENT LOOP	REGEN ENABLE	0	1	1		0: 2Q (NON-REGEN) 1: 4Q (REGEN)	V0	W1
202	fm	SPEED LOOP	INT. DEFEAT	0	1	0		0: OFF 1: ON	V1	W0
203	fn	INVERSE TIME	INVERSE TIME O/P	0.00	0.00	0.00	%		V1	W4
206	fq	ENCODER 1	ENCODER	0	0	0	RPM		V0	W4
207	fr	FEEDBACKS	SPEED FEEDBACK	0.00	0.00	0.00	%		V0	W4
208	fs	SETPOINT SUM 1	RATIO 0	-3.0000	3.0000	1.0000			V0	W0
209	ft	FIELD CONTROL	FLD.CTRL MODE	0	1	0		0: VOLTAGE CONTROL 1: CURRENT CONTROL	V0	W1
210	fu	FIELD CONTROL	FLD.VOLTS RATIO	0.0	100.0	90.0	%		V0	W0
212	fw	JOG/SLACK	OPERATING MODE	0	7	0		0: STOP 1: STOP 2: JOG SP. 1 3: JOG SP. 2 4: RUN 5: TAKE UP SP. 1 6: TAKE UP SP. 2 7: CRAWL	V1	W4
216	g0	STOP RATES	PROG STOP LIMIT	0.0	600.0	60.0	s		V1	W0

Tag	Mn	MMI Block Name	MMI Parameter Name	Minimum	Maximum	Default	Units	Range	Notes	
217	g1	STOP RATES	STOP LIMIT	0.0	600.0	60.0	s		V1	W0
218	g2	JOG/SLACK	JOG SPEED 1	-100.00	100.00	5.00	%		V0	W0
219	g3	JOG/SLACK	JOG SPEED 2	-100.00	100.00	-5.00	%		V0	W0
224	g8	ALARMS	STALL TRIP DELAY	0.1	600.0	30.0	s		V1	W0
225	g9	JOG/SLACK	CRAWL SPEED	-100.00	100.00	10.00	%		V0	W0
227	gb	SEQUENCING	AUX JOG	0	1	1		0: OFF 1: ON	V0	W0
228	gc	JOG/SLACK	MODE	0	1	0			V0	W0
230	ge	ANALOG INPUT 1	CALIBRATION	-3.0000	3.0000	1.0000			V0	W0
231	gf	ANALOG INPUT 1	MAX VALUE	-300.00	300.00	100.00	%		V0	W0
232	gg	ANALOG INPUT 1	MIN VALUE	-300.00	300.00	-100.00	%		V0	W0
233	gh	ANALOG INPUT 2	CALIBRATION	-3.0000	3.0000	1.0000			V0	W0
234	gi	ANALOG INPUT 2	MAX VALUE	-300.00	300.00	100.00	%		V0	W0
235	gj	ANALOG INPUT 2	MIN VALUE	-300.00	300.00	-100.00	%		V0	W0
236	gk	ANALOG INPUT 3	CALIBRATION	-3.0000	3.0000	1.0000			V0	W0
237	gl	ANALOG INPUT 3	MAX VALUE	-300.00	300.00	100.00	%		V0	W0
238	gm	ANALOG INPUT 3	MIN VALUE	-300.00	300.00	-100.00	%		V0	W0
239	gn	ANALOG INPUT 4	CALIBRATION	-3.0000	3.0000	1.0000			V0	W0
240	go	ANALOG INPUT 4	MAX VALUE	-300.00	300.00	200.00	%		V0	W0
241	gp	ANALOG INPUT 4	MIN VALUE	-300.00	300.00	-200.00	%		V0	W0
242	gq	ANALOG INPUT 5	CALIBRATION	-3.0000	3.0000	1.0000			V0	W0
243	gr	ANALOG INPUT 5	MAX VALUE	-300.00	300.00	200.00	%		V0	W0
244	gs	ANALOG INPUT 5	MIN VALUE	-300.00	300.00	-200.00	%		V0	W0
245	gt	ANALOG OUTPUT 1	% TO GET 10V	-300.00	300.00	100.00	%		V0	W0
246	gu	LINK 23	DESTINATION TAG	0	1276	100			V0	W2
247	gv	LINK 26	DESTINATION TAG	0	1276	301			V0	W2
248	gw	ANALOG OUTPUT 2	% TO GET 10V	-300.00	300.00	100.00	%		V0	W0
249	gx	LINK 24	DESTINATION TAG	0	1276	5			V0	W2
250	gy	LINK 25	DESTINATION TAG	0	1276	48			V0	W2
251	gz	LINK 17	SOURCE TAG	-1276	1276	62			V0	W2
252	h0	LINK 18	SOURCE TAG	-1276	1276	63			V0	W2
253	h1	JOG/SLACK	TAKE UP 1	-100.00	100.00	5.00	%		V0	W0
254	h2	JOG/SLACK	TAKE UP 2	-100.00	100.00	-5.00	%		V0	W0
255	h3	RAISE/LOWER	RESET VALUE	-300.00	300.00	0.00	%		V0	W0

Tag	Mn	MMI Block Name	MMI Parameter Name	Minimum	Maximum	Default	Units	Range	Notes	
256	h4	RAISE/LOWER	INCREASE RATE	0.1	600.0	10.0	s		V0	W0
257	h5	RAISE/LOWER	DECREASE RATE	0.1	600.0	10.0	s		V0	W0
258	h6	RAISE/LOWER	MIN VALUE	-300.00	300.00	-100.00	%		V0	W0
259	h7	RAISE/LOWER	MAX VALUE	-300.00	300.00	100.00	%		V0	W0
260	h8	LINK 27	RAISE/LOWER DEST	0	1276	0			V0	W2
261	h9	RAISE/LOWER	RAISE INPUT	0	1	0			V0	W0
262	ha	RAISE/LOWER	LOWER INPUT	0	1	0			V0	W0
263	hb	ALARMS	STALL THRESHOLD	0.00	200.00	95.00	%		V1	W0
264	hc	RAISE/LOWER	RAISE/LOWER O/P	0.00	0.00	0.00	%		V0	W4
266	he	RAMPS	% S-RAMP	0.00	100.00	2.50	%		V1	W0
268	hg	SPEED LOOP	MODE	0	3	0		0: DISABLED 1: SPD FBK DEP 2: SPD ERR DEP 3: CUR DMD DEP	V0	W0
269	hh	SPEED LOOP	SPD BRK1 (LOW)	0.00	100.00	1.00	%		V0	W0
270	hi	SPEED LOOP	SPD BRK2 (HIGH)	0.00	100.00	5.00	%		V0	W0
271	hj	SPEED LOOP	PROP. GAIN	0.00	200.00	5.00			V0	W0
272	hk	SPEED LOOP	INT.TIME.CONST	0.001	30.000	0.500	s		V0	W0
274	hm	SPEED LOOP	I GAIN IN RAMP	0.0000	2.0000	1.0000			V0	W0
284	hw	SPEED LOOP	ZERO SPD. LEVEL	0.00	200.00	0.50	%		V0	W0
285	hx	SPEED LOOP	ZERO IAD LEVEL	0.00	200.00	1.50	%		V0	W0
286	hy	RAMPS	RAMPING THRESH.	0.00	100.00	0.50	%		V1	W0
287	hz	RAMPS	AUTO RESET	0	1	1		0: DISABLED 1: ENABLED	V1	W0
288	i0	RAMPS	EXTERNAL RESET	0	1	0		0: DISABLED 1: ENABLED	V1	W0
289	i1	SPEED LOOP	SETPOINT 1	-105.00	105.00	0.00	%		V0	W0
290	i2	SPEED LOOP	SETPOINT 2 (A3)	0.00	0.00	0.00	%		V0	W4
291	i3	SPEED LOOP	SETPOINT 3	-105.00	105.00	0.00	%		V0	W0
292	i4	SETPOINT SUM 1	SIGN 0	0	1	1		0: NEGATIVE 1: POSITIVE	V1	W0
293	i5	LINK 28	RAMP O/P DEST	0	1276	291			V0	W2
294	i6	LINK 29	SPT SUM 1 DEST	0	1276	289			V0	W2
297	i9	SPEED LOOP	SPEED ERROR	0.00	0.00	0.00	%		V0	W4
298	ia	FEEDBACKS	CURRENT FEEDBACK	0.00	0.00	0.00	%		V0	W4

Tag	Mn	MMI Block Name	MMI Parameter Name	Minimum	Maximum	Default	Units	Range	Notes	
299	ib	CURRENT LOOP	CURRENT DEMAND	0.00	0.00	0.00	%		V0	W4
300	ic	FIELD CONTROL	FIELD I FBK.	0.00	0.00	0.00	%		V0	W4
301	id	CURRENT LOOP	POS. I CLAMP IN	-200.00	200.00	200.00	%		V0	W0
302	ie	STOP RATES	CONTACTOR DELAY	0.1	600.0	1.0	s		V1	W0
304	ig	MENUS	LANGUAGE	0	1	0		0: ENGLISH 1: ENGLISH	V1	W1
305	ih	ALARMS	TRIP RESET	0	1	1			V1	W0
306	ii	LINK 19	SOURCE TAG	-1276	1276	89			V0	W2
307	ij	RAISE/LOWER	EXTERNAL RESET	0	1	0			V1	W0
308	ik	FEEDBACKS	TACH INPUT	0.0	0.0	0.0	%		V0	W4
309	il	SETPOINT SUM 1	INPUT 0	-300.00	300.00	0.00	%		V1	W0
312	io	PNO CONFIG	PNO 112	-1276	1276	0			V0	W0
313	ip	PNO CONFIG	PNO 113	-1276	1276	0			V0	W0
314	iq	PNO CONFIG	PNO 114	-1276	1276	0			V0	W0
315	ir	PNO CONFIG	PNO 115	-1276	1276	0			V0	W0
316	is	PNO CONFIG	PNO 116	-1276	1276	0			V0	W0
317	it	PNO CONFIG	PNO 117	-1276	1276	0			V0	W0
318	iu	PNO CONFIG	PNO 118	-1276	1276	0			V0	W0
319	iv	PNO CONFIG	PNO 119	-1276	1276	0			V0	W0
320	iw	PNO CONFIG	PNO 120	-1276	1276	379			V0	W0
321	ix	PNO CONFIG	PNO 121	-1276	1276	380			V0	W0
322	iy	PNO CONFIG	PNO 122	-1276	1276	381			V0	W0
323	iz	PNO CONFIG	PNO 123	-1276	1276	382			V0	W0
324	j0	PNO CONFIG	PNO 124	-1276	1276	383			V0	W0
325	j1	PNO CONFIG	PNO 125	-1276	1276	384			V0	W0
326	j2	PNO CONFIG	PNO 126	-1276	1276	385			V0	W0
327	j3	PNO CONFIG	PNO 127	-1276	1276	0			V0	W0
328	j4	COMMS PORT 3	ESP SUP.(ASCII)	0	1	1			V0	W0
329	j5	COMMS PORT 3	GROUP ID (GID)	0	7	0			V0	W0
330	j6	COMMS PORT 3	UNIT ID (UID)	0	255	0			V0	W0
331	j7	COMMS PORT 3	CHANGEBAND (BIN)	0.00	100.00	0.00	%		V0	W0
332	j8	COMMS PORT 3	ERROR REPORT	0x0000	0xFFFF	0x00C0			V0	W0
333	j9	COMMS PORT 3	PNO.7	0x0000	0xFFFF	0xFFFF			V0	W0
337	jd	ALARMS	THERMISTOR STATE	0	1	0			V0	W4

Tag	Mn	MMI Block Name	MMI Parameter Name	Minimum	Maximum	Default	Units	Range	Notes	
339	jf	miniLINK	VALUE 1	-300.00	300.00	0.00	%		V1	W0
340	jg	miniLINK	VALUE 2	-300.00	300.00	0.00	%		V1	W0
341	jh	miniLINK	VALUE 3	-300.00	300.00	0.00	%		V1	W0
342	ji	miniLINK	VALUE 4	-300.00	300.00	0.00	%		V1	W0
343	jj	miniLINK	VALUE 5	-300.00	300.00	0.00	%		V1	W0
344	jk	miniLINK	VALUE 6	-300.00	300.00	0.00	%		V1	W0
345	jl	miniLINK	VALUE 7	-300.00	300.00	0.00	%		V1	W0
346	jm	miniLINK	LOGIC 1	0	1	0		0: OFF 1: ON	V1	W0
347	jn	miniLINK	LOGIC 2	0	1	0		0: OFF 1: ON	V1	W0
348	jo	miniLINK	LOGIC 3	0	1	0		0: OFF 1: ON	V1	W0
349	jp	miniLINK	LOGIC 4	0	1	0		0: OFF 1: ON	V1	W0
350	jq	miniLINK	LOGIC 5	0	1	0		0: OFF 1: ON	V1	W0
351	jr	miniLINK	LOGIC 6	0	1	0		0: OFF 1: ON	V1	W0
352	js	miniLINK	LOGIC 7	0	1	0		0: OFF 1: ON	V1	W0
353	jt	miniLINK	LOGIC 8	0	1	0		0: OFF 1: ON	V1	W0
355	jv	JOG/SLACK	RAMP RATE	0.1	600.0	1.0	s		V0	W0
357	jx	SPEED LOOP	MAX DEMAND	0.00	105.00	105.00	%		V0	W0
358	jy	SPEED LOOP	MIN DEMAND	-105.00	105.00	-105.00	%		V0	W0
359	jz	DIGITAL OUTPUT 1	INVERTED	0	1	0			V0	W0
360	k0	DIGITAL OUTPUT 2	INVERTED	0	1	0			V0	W0
361	k1	DIGITAL OUTPUT 3	INVERTED	0	1	0			V0	W0
362	k2	ANALOG OUTPUT 1	MODULUS	0	1	0			V0	W0
363	k3	ANALOG OUTPUT 2	MODULUS	0	1	0			V0	W0
364	k4	LINK 1	SOURCE TAG	-1276	1276	0			V0	W2
365	k5	LINK 1	DESTINATION TAG	0	1276	0			V0	W2
366	k6	LINK 2	SOURCE TAG	-1276	1276	0			V0	W2
367	k7	LINK 2	DESTINATION TAG	0	1276	0			V0	W2

Tag	Mn	MMI Block Name		MMI Parameter Name	Minimum	Maximum	Default	Units	Range	Notes	
368	k8	LINK	3	SOURCE TAG	-1276	1276	0			V0	W2
369	k9	LINK	3	DESTINATION TAG	0	1276	0			V0	W2
370	ka	LINK	4	SOURCE TAG	-1276	1276	0			V0	W2
371	kb	LINK	4	DESTINATION TAG	0	1276	0			V0	W2
374	ke	SEQUENCING		SYSTEM RESET	0	1	0			V0	W4
375	kf	SETPOINT SUM	1	LIMIT	0.00	200.00	105.00	%		V0	W0
376	kg	SEQUENCING		DRIVE RUNNING	0	1	0			V0	W4
379	kj	miniLINK		VALUE 8	-300.00	300.00	0.00	%		V1	W0
380	kk	miniLINK		VALUE 9	-300.00	300.00	0.00	%		V1	W0
381	kl	miniLINK		VALUE 10	-300.00	300.00	0.00	%		V1	W0
382	km	miniLINK		VALUE 11	-300.00	300.00	0.00	%		V1	W0
383	kn	miniLINK		VALUE 12	-300.00	300.00	0.00	%		V1	W0
384	ko	miniLINK		VALUE 13	-300.00	300.00	0.00	%		V1	W0
385	kp	miniLINK		VALUE 14	-300.00	300.00	0.00	%		V1	W0
390	ku	LINK	11	SOURCE TAG	-1276	1276	0			V0	W2
391	kv	LINK	43	DESTINATION TAG	0	1276	0			V0	W2
392	kw	ADVANCED	1	ADVANCED	0	1	0		0: OFF 1: ON	V0	W0
393	kx	ADVANCED	1	MODE	0	6	0		0: SWITCH 1: INVERT 2: AND 3: OR 4: SIGN CHANGER 5: MODULUS 6: COMPARATOR	V0	W0
394	ky	LINK	41	AUX.SOURCE	-1276	1276	0			V0	W2
395	kz	LINK	12	SOURCE TAG	-1276	1276	0			V0	W2
396	l0	LINK	44	DESTINATION TAG	0	1276	0			V0	W2
397	l1	ADVANCED	2	ADVANCED	0	1	0		0: OFF 1: ON	V0	W0
398	l2	ADVANCED	2	MODE	0	6	0		See Tag 393	V0	W0
399	l3	LINK	42	AUX.SOURCE	-1276	1276	0			V0	W2
400	l4	LINK	30	PID O/P DEST	0	1276	0			V0	W2
401	l5	PID		DERIVATIVE TC	0.000	10.000	0.000	s		V1	W0
402	l6	PID		INT.TIME.CONST	0.01	100.00	5.00	s		V1	W0

Tag	Mn	MMI Block Name	MMI Parameter Name	Minimum	Maximum	Default	Units	Range	Notes	
403	l7	PID	FILTER T.C.	0.000	10.000	0.100	s		V1	W0
404	l8	PROFILED GAIN	PROP. GAIN	0.0	100.0	1.0			V1	W0
405	l9	PID	POSITIVE LIMIT	0.00	105.00	100.00	%		V1	W0
406	la	PID	NEGATIVE LIMIT	-105.00	0.00	-100.00	%		V1	W0
407	lb	PID	O/P SCALER(TRIM)	-3.0000	3.0000	0.2000			V1	W0
408	lc	PID	ENABLE	0	1	1		0: DISABLED 1: ENABLED	V1	W0
409	ld	PID	INT. DEFEAT	0	1	0		0: OFF 1: ON	V1	W0
410	le	PID	INPUT 1	-300.00	300.00	0.00	%		V1	W0
411	lf	PID	INPUT 2	-300.00	300.00	0.00	%		V1	W0
412	lg	PID	RATIO 1	-3.0000	3.0000	1.0000			V1	W0
413	lh	PID	RATIO 2	-3.0000	3.0000	1.0000			V1	W0
414	li	PID	DIVIDER 2	-3.0000	3.0000	1.0000			V1	W0
415	lj	PID	PID ERROR	0.00	0.00	0.00	%		V1	W4
416	lk	PID	PID CLAMPED	0	1	0			V1	W4
417	ll	PID	PID OUTPUT	0.00	0.00	0.00	%		V1	W4
418	lm	PID	DIVIDER 1	-3.0000	3.0000	1.0000			V1	W0
419	ln	SETPOINT SUM 1	DIVIDER 1	-3.0000	3.0000	1.0000			V1	W0
420	lo	SETPOINT SUM 1	DIVIDER 0	-3.0000	3.0000	1.0000			V0	W0
421	lp	CURRENT LOOP	MAIN CURR. LIMIT	0.00	200.00	110.00	%		V0	W0
422	lq	RAMPS	RESET VALUE	-300.00	300.00	0.00	%		V1	W0
423	lr	SETPOINT SUM 1	INPUT 2	-300.00	300.00	0.00	%		V1	W0
424	ls	DIAMETER CALC.	LINE SPEED	-105.00	105.00	0.00	%		V1	W0
425	lt	DIAMETER CALC.	MIN DIAMETER	0.00	100.00	10.00	%		V1	W0
426	lu	DIAMETER CALC.	MIN SPEED	0.00	100.00	5.00	%		V1	W0
427	lv	DIAMETER CALC.	DIAMETER	0.00	0.00	0.00	%		V1	W4
428	lw	DIAMETER CALC.	MOD OF LINE SPD	0.00	0.00	0.00	%		V0	W4
429	lx	DIAMETER CALC.	MOD OF REEL SPD	0.00	0.00	0.00	%		V0	W4
430	ly	DIAMETER CALC.	UNFILT DIAMETER	0.00	0.00	0.00	%		V0	W4
431	lz	LINK 31	DIAMETER	0	1276	0			V0	W2
432	m0	TORQUE CALC.	TORQUE DEMAND	-200.00	200.00	0.00	%		V1	W0
433	m1	TORQUE CALC.	TENSION ENABLE	0	1	1		0: DISABLED 1: ENABLED	V1	W0

Tag	Mn	MMI Block Name		MMI Parameter Name	Minimum	Maximum	Default	Units	Range	Notes	
434	m2	TORQUE CALC.		OVER WIND	0	1	1		0: DISABLED 1: ENABLED	V1	W0
435	m3	LINK	32	POS. I CLAMP	0	1276	0			V0	W2
436	m4	LINK	33	NEG. I CLAMP	0	1276	0			V0	W2
437	m5	DIAMETER CALC.		REEL SPEED	-105.00	105.00	0.00	%		V1	W0
438	m6	DIAMETER CALC.		TAPER	-100.00	100.00	0.00	%		V1	W0
439	m7	DIAMETER CALC.		TENSION SPT.	0.00	100.00	0.00	%		V1	W0
440	m8	DIAMETER CALC.		TENSION TRIM	-100.00	100.00	0.00	%		V1	W0
441	m9	DIAMETER CALC.		TOT.TENS.DEMAND	0.00	0.00	0.00	%		V1	W4
442	ma	LINK	34	TAPER	0	1276	0			V0	W2
443	mb	SETPOINT SUM	2	INPUT 1	-300.00	300.00	0.00	%		V1	W0
444	mc	SETPOINT SUM	2	INPUT 0	-300.00	300.00	0.00	%		V1	W0
445	md	SETPOINT SUM	2	INPUT 2	-300.00	300.00	0.00	%		V1	W0
446	me	SETPOINT SUM	2	RATIO 1	-3.0000	3.0000	1.0000			V0	W0
447	mf	SETPOINT SUM	2	RATIO 0	-3.0000	3.0000	1.0000			V0	W0
448	mg	SETPOINT SUM	2	DIVIDER 0	-3.0000	3.0000	1.0000			V0	W0
449	mh	SETPOINT SUM	2	LIMIT	0.00	200.00	105.00	%		V0	W0
450	mi	LINK	35	SETPOINT SUM 2	0	1276	0			V0	W2
451	mj	SETPOINT SUM	2	SPT SUM OUTPUT	0.00	0.00	0.00	%		V1	W4
452	mk	DIAMETER CALC.		TAPERED DEMAND	0.00	0.00	0.00	%		V1	W4
453	ml	DIAMETER CALC.		RAMP RATE	0.1	600.0	5.0	s		V1	W0
454	mm	LINK	5	SOURCE TAG	-1276	1276	0			V0	W2
455	mn	LINK	5	DESTINATION TAG	0	1276	0			V0	W2
456	mo	LINK	6	SOURCE TAG	-1276	1276	0			V0	W2
457	mp	LINK	6	DESTINATION TAG	0	1276	0			V0	W2
458	mq	LINK	7	SOURCE TAG	-1276	1276	0			V0	W2
459	mr	LINK	7	DESTINATION TAG	0	1276	0			V0	W2
460	ms	LINK	8	SOURCE TAG	-1276	1276	0			V0	W2
461	mt	LINK	8	DESTINATION TAG	0	1276	0			V0	W2
462	mu	DIAMETER CALC.		RESET VALUE	0.00	100.00	10.00	%		V1	W0
463	mv	DIAMETER CALC.		EXTERNAL RESET	0	1	0		0: DISABLED 1: ENABLED	V1	W0
464	mw	ANALOG OUTPUT	1	OFFSET	-100.00	100.00	0.00	%		V0	W0
465	mx	ANALOG OUTPUT	2	OFFSET	-100.00	100.00	0.00	%		V0	W0

Tag	Mn	MMI Block Name		MMI Parameter Name	Minimum	Maximum	Default	Units	Range	Notes	
466	my	SETPOINT SUM	2	DIVIDER 1	-3.0000	3.0000	1.0000			V1	W0
467	mz	LINK	9	SOURCE TAG	-1276	1276	0			V0	W2
468	n0	LINK	9	DESTINATION TAG	0	1276	0			V0	W2
469	n1	LINK	10	SOURCE TAG	-1276	1276	0			V0	W2
470	n2	LINK	10	DESTINATION TAG	0	1276	0			V0	W2
472	n4	ALARMS		SPEED FBK STATE	0	1	0			V0	W4
473	n5	PROFILED GAIN		MODE	0	4	0			V1	W0
474	n6	PROFILED GAIN		MIN PROFILE GAIN	0.00	100.00	20.00	%		V1	W0
475	n7	PROFILED GAIN		PROFILED GAIN	0.0	0.0	0.0			V1	W4
478	na	LINK	36	TENS+COMP CALC.	0	1276	0			V0	W2
479	nb	DIAMETER CALC.		FIX.INERTIA COMP	-300.00	300.00	0.00	%		V1	W0
480	nc	DIAMETER CALC.		VAR.INERTIA COMP	-300.00	300.00	0.00	%		V1	W0
481	nd	DIAMETER CALC.		ROLL WIDTH/MASS	0.00	100.00	100.00	%		V1	W0
482	ne	DIAMETER CALC.		FILTER T.C.	0	20000	10			V1	W0
483	nf	DIAMETER CALC.		RATE CAL	-100.00	100.00	10.00			V1	W0
484	ng	DIAMETER CALC.		NORMALISED dv/dt	-300.00	300.00	0.00	%		V1	W0
485	nh	DIAMETER CALC.		INERTIA COMP O/P	0.00	0.00	0.00	%		V1	W4
486	ni	DIAMETER CALC.		TENSION SCALER	-3.0000	3.0000	1.0000			V1	W0
487	nj	DIAMETER CALC.		STATIC COMP	-300.00	300.00	0.00	%		V0	W0
488	nk	DIAMETER CALC.		DYNAMIC COMP	-300.00	300.00	0.00	%		V0	W0
489	nl	DIAMETER CALC.		REWIND	0	1	1		0: DISABLED 1: ENABLED	V0	W0
491	nn	SETPOINT SUM	2	STPT SUM 2 OUT 0	0.00	0.00	0.00	%		V0	W4
492	no	SETPOINT SUM	2	STPT SUM 2 OUT 1	0.00	0.00	0.00	%		V0	W4
493	np	ANALOG INPUT	2	OUTPUT	0.00	0.00	0.00	%		V0	W4
494	nq	LINK	37	DESTINATION TAG	0	1276	496			V0	W2
495	nr	LINK	38	DESTINATION TAG	0	1276	497			V0	W2
496	ns	SEQUENCING		JOG/SLACK	0	1	0		0: OFF 1: ON	V0	W0
497	nt	SEQUENCING		ENABLE	0	1	0		0: OFF 1: ON	V0	W0
498	nu	DIAMETER CALC.		LINE SPEED SPT	-105.00	105.00	0.00	%		V0	W0

Tag	Mn	MMI Block Name	MMI Parameter Name	Minimum	Maximum	Default	Units	Range	Notes	
500	nw	TEC OPTION	TEC OPTION TYPE	0	15	0		0: NONE 1: RS485 2: PROFIBUS DP 3: LINK 4: DEVICE NET 5: CAN OPEN 6: LONWORKS 7: CONTROLNET 8: MODBUS PLUS 9: ETHERNET 10: TYPE 10 11: TYPE 11 12: TYPE 12 13: TYPE 13 14: TYPE 14 15: TYPE 15	V0	W0
501	nx	TEC OPTION	TEC OPTION IN 1	-32768	32767	0			V0	W0
502	ny	TEC OPTION	TEC OPTION IN 2	-32768	32767	0			V0	W0
503	nz	TEC OPTION	TEC OPTION IN 3	-32768	32767	0			V0	W0
504	o0	TEC OPTION	TEC OPTION IN 4	-32768	32767	0			V0	W0
505	o1	TEC OPTION	TEC OPTION IN 5	-32768	32767	0			V0	W0
506	o2	TEC OPTION	TEC OPTION FAULT	0	5	0		0: NONE 1: PARAMETER 2: TYPE MISMATCH 3: SELF TEST 4: HARDWARE 5: MISSING	V0	W4
507	o3	TEC OPTION	TEC OPTION VER	0x0000	0xFFFF	0x0000			V0	W4
508	o4	TEC OPTION	TEC OPTION OUT 1	0	0	0			V0	W4
509	o5	TEC OPTION	TEC OPTION OUT 2	0	0	0			V0	W4
510	o6	DRIVE INFO	PRODUCT CODE	0	104	3		0: INVALID 1: DC 4Q 15A 2: DC 2Q 15A 3: DC 4Q 35A 4: DC 2Q 35A 5: DC 4Q 40A 6: DC 2Q 40A 7: DC 4Q 55A 8: DC 2Q 55A	V0	W3

Tag	Mn	MMI Block Name	MMI Parameter Name	Minimum	Maximum	Default	Units	Range	Notes	
								9: DC 4Q 70A 10: DC 2Q 70A 11: DC 4Q 90A 12: DC 2Q 90A 13: DC 4Q 110A 14: DC 2Q 110A 15: DC 4Q 125A 16: DC 2Q 125A 17: DC 4Q 162A 18: DC 2Q 162A 19: DC 4Q 165A 20: DC 2Q 165A 21: DC 4Q 35A D 22: DC 2Q 35A D 23: DC 4Q 70A D 24: DC 2Q 70A D 25: DC 4Q 110A D 26: DC 2Q 110A D 27: DC 4Q 150A D 28: DC 2Q 150A D 29: DC 4Q 180A D 30: DC 2Q 180A D 31: DC 4Q 270A D 32: DC 2Q 270A D 33: DC 4Q 128* 20* D 34: DC 2Q 128* 20* D 35: DC 4Q 1024* 20*D 36: DC 2Q 1024* 20*D 37: DC 4Q 1024* 26*D 38: DC 2Q 1024* 26*D 39: DC 4Q 360A D 40: DC 2Q 360A D 41: DC 4Q 450A D 42: DC 2Q 450A D 43: DC 4Q 720A D 44: DC 2Q 720A D 45: DC 4Q 800A D 46: DC 2Q 800A D 47: DC 4Q 1024* 30*D 48: DC 2Q 1024* 30*D 49: DC 4Q 1200A 20 D		

Tag	Mn	MMI Block Name	MMI Parameter Name	Minimum	Maximum	Default	Units	Range	Notes	
								50: DC 2Q 1200A 20 D 51: DC 4Q 1700A 20 D 52: DC 2Q 1700A 20 D 53: DC 4Q 2200A 20 D 54: DC 2Q 2200A 20 D 55: DC 4Q 2700A 20 D 56: DC 2Q 2700A 20 D 57: DC 4Q 1200A 40 D 58: DC 2Q 1200A 40 D 59: DC 4Q 1700A 40 D 60: DC 2Q 1700A 40 D 61: DC 4Q 2200A 40 D 62: DC 2Q 2200A 40 D 63: DC 4Q 2700A 40 D 64: DC 2Q 2700A 40 D 65: DC 4Q 1200A 60 D 66: DC 2Q 1200A 60 D 67: DC 4Q 1700A 60 D 68: DC 2Q 1700A 60 D 69: DC 4Q 2200A 60 D 70: DC 2Q 2200A 60 D 71: DC 4Q 2700A 60 D 72: DC 2Q 2700A 60 D 73: DC 4Q 1200A 80 D 74: DC 2Q 1200A 80 D 75: DC 4Q 1700A 80 D 76: DC 2Q 1700A 80 D 77: DC 4Q 2200A 80 D 78: DC 2Q 2200A 80 D 79: DC 4Q 2700A 80 D 80: DC 2Q 2700A 80 D 81: DC RETRO 4Q 128A 82: DC RETRO 2Q 128A 83: DC 2Q 40A 84: DC 4Q 40A 85: DC 4Q 725A 86: DC 2Q 725A 87: DC 4Q 830A 88: DC 2Q 830A 89: DC 4Q 1580A 90: DC 2Q 1580A		

Tag	Mn	MMI Block Name	MMI Parameter Name	Minimum	Maximum	Default	Units	Range	Notes	
								91: DC 4Q 380A 92: DC 2Q 380A 93: DC 4Q 500A 94: DC 2Q 500A 95: DC 4Q 725A 40*D 96: DC 2Q 725A 40*D 97: DC 4Q 830A 40*D 98: DC 2Q 830A 40*D 99: DC 4Q 1580A 40*D 100: DC 2Q 1580A 40*D 101: DC 4Q 380A 40*D 102: DC 2Q 380A 40*D 103: DC 4Q 500A 40*D 104: DC 2Q 500A 40*D		
511	o7	OP-STATION	LOCAL KEY ENABLE	0	1	1			V0	W0
512	o8	OP-STATION	SETPOINT	0.00	100.00	0.00	%		V0	W0
513	o9	OP-STATION	JOG SETPOINT	0.00	100.00	5.00	%		V0	W0
514	oa	OP-STATION	RAMP ACCEL TIME	0.1	600.0	10.0	s		V0	W0
515	ob	OP-STATION	RAMP DECEL TIME	0.1	600.0	10.0	s		V0	W0
516	oc	OP-STATION	INITIAL DIR	0	1	1		0: REVERSE 1: FORWARD	V0	W0
517	od	OP-STATION	INITIAL MODE	0	1	0		0: REMOTE 1: LOCAL	V0	W0
518	oe	OP-STATION	INITIAL VIEW	0	1	0		0: LOCAL 1: PROGRAM	V0	W0
519	of	OP-STATION	INITIAL SETPOINT	0.00	100.00	0.00	%		V0	W0
520	og	OP-STATION	INITIAL JOG	0.00	100.00	5.00	%		V0	W0
521	oh	CONFIGURE DRIVE	NOM MOTOR VOLTS	100	875	100	V		V0	W2
523	oj	CONFIGURE DRIVE	ARMATURE CURRENT	1.0	35.0	1.0	A		V0	W2
524	ok	CONFIGURE DRIVE	FIELD CURRENT	0.2	4.0	0.2	A		V0	W2
525	ol	SEQUENCING	COAST STOP	0	1	0			V0	W4
527	on	CURRENT LOOP	MASTER BRIDGE	0	1	0			V0	W4
528	oo	ALARMS	LAST ALARM	0x0000	0xFFFF	0x0000			V0	W4
535	ov	SEQUENCING	REM.SEQ.ENABLE	0	1	0			V0	W1
536	ow	SEQUENCING	REM.SEQUENCE	0x0000	0xFFFF	0x8000			V1	W0
537	ox	SEQUENCING	SEQ STATUS	0x0000	0xFFFF	0x0000			V0	W4
538	oy	CURRENT LOOP	CURRENT FBK.AMPS	0.0	0.0	0.0	A		V0	W4

Tag	Mn	MMI Block Name	MMI Parameter Name	Minimum	Maximum	Default	Units	Range	Notes	
539	oz	FIELD CONTROL	FIELD I FBK.AMPS	0.0	0.0	0.0	A		V0	W4
540	p0	ALARMS	REM TRIP INHIBIT	0	1	0		0: ENABLED 1: INHIBITED	V0	W0
541	p1	ALARMS	REM TRIP DELAY	0.1	600.0	10.0	s		V0	W0
542	p2	ALARMS	REMOTE TRIP	0	1	0			V0	W4
545	p5	DRIVE INFO	PCODE ID	0	255	3			V0	W2
547	p7	SPEED LOOP	SPD.FBK.FILTER	0.000	1.000	0.000			V0	W0
549	p9	SPEED LOOP	SPEED LOOP O/P	0.00	0.00	0.00	%		V0	W4
556	pg	INERTIA COMP	INERTIA	0.00	200.00	0.00			V0	W0
557	ph	INERTIA COMP	FILTER	0	20000	0			V0	W0
558	pi	INERTIA COMP	RATE CAL	0.00	200.00	100.00			V0	W0
559	pj	PRESET SPEEDS	MAX SPEED	0.1	3000.0	100.0	%		V0	W0
560	pk	PRESET SPEEDS	SELECT 1	0	1	0			V0	W0
561	pl	PRESET SPEEDS	SELECT 2	0	1	0			V0	W0
562	pm	PRESET SPEEDS	SELECT 3	0	1	0			V0	W0
563	pn	PRESET SPEEDS	INVERT O/P	0	1	0			V0	W0
564	po	PRESET SPEEDS	INPUT 0	-3000.0	3000.0	0.0			V0	W0
565	pp	PRESET SPEEDS	INPUT 1	-3000.0	3000.0	0.0			V0	W0
566	pq	PRESET SPEEDS	INPUT 2	-3000.0	3000.0	0.0			V0	W0
567	pr	PRESET SPEEDS	INPUT 3	-3000.0	3000.0	0.0			V0	W0
568	ps	PRESET SPEEDS	INPUT 4	-3000.0	3000.0	0.0			V0	W0
569	pt	PRESET SPEEDS	INPUT 5	-3000.0	3000.0	0.0			V0	W0
570	pu	PRESET SPEEDS	INPUT 6	-3000.0	3000.0	0.0			V0	W0
571	pv	PRESET SPEEDS	INPUT 7	-3000.0	3000.0	0.0			V0	W0
572	pw	PRESET SPEEDS	PRESET O/P	0.00	0.00	0.00	%		V0	W4
573	px	LINK 39	PRESET DEST	0	1276	0			V0	W2
574	py	SRAMP	INPUT	-100.00	100.00	0.00	%		V0	W0
575	pz	SRAMP	RATE SELECT	0	1	0			V0	W0
576	q0	SRAMP	ACCEL 0	0.00	100.00	60.00	%		V0	W0
577	q1	SRAMP	DECEL 0	0.00	100.00	60.00	%		V0	W0
578	q2	SRAMP	ACCEL 0 JERK 1	0.00	100.00	20.00	%		V0	W0
579	q3	SRAMP	ACCEL 1	0.00	100.00	30.00	%		V0	W0
580	q4	SRAMP	DECEL 1	0.00	100.00	30.00	%		V0	W0
581	q5	SRAMP	ACCEL 1 JERK 1	0.00	100.00	20.00	%		V0	W0

Tag	Mn	MMI Block Name	MMI Parameter Name	Minimum	Maximum	Default	Units	Range	Notes	
582	q6	SRAMP	AUTO RESET	0	1	1			V0	W0
583	q7	SRAMP	EXTERNAL RESET	0	1	0			V0	W0
584	q8	SRAMP	RESET VALUE	-100.00	100.00	0.00	%		V0	W0
585	q9	SRAMP	QUENCH	0	1	0			V0	W0
586	qa	SRAMP	AT SPEED LEVEL	0.00	100.00	1.00	%		V0	W0
587	qb	SRAMP	AT SPEED	0	1	0			V0	W4
588	qc	SRAMP	ACCEL OUTPUT	0.00	0.00	0.00	%		V0	W4
589	qd	SRAMP	SRAMP OUTPUT	0.00	0.00	0.00	%		V0	W4
590	qe	LINK 40	SRAMP DEST	0	1276	0			V0	W2
593	qh	PRESET SPEEDS	OUTPUT FPM	0.0	0.0	0.0			V0	W4
594	qi	STOP RATES	CURR DECAY RATE	0.00	200.00	0.00			V0	W0
595	qj	SPEED LOOP	PRESET TORQUE	-250.00	250.00	0.00	%		V0	W0
596	qk	SRAMP	DECEL 0 JERK 1	0.00	100.00	20.00	%		V0	W0
597	ql	SRAMP	DECEL 1 JERK 1	0.00	100.00	20.00	%		V0	W0
600	qo	PRESET SPEEDS	LIMIT	0	1	0			V0	W0
601	qp	INERTIA COMP	DELTA	0.00	0.00	0.00	%		V0	W4
602	qq	INERTIA COMP	INERTIA COMP O/P	0.00	0.00	0.00	%		V0	W4
603	qr	INERTIA COMP	UNSCALED OUTPUT	0.00	0.00	0.00	%		V0	W4
604	qs	SPEED LOOP	PRESET T SCALE	-200.00	200.00	100.00	%		V0	W0
605	qt	FEEDBACKS	ARM VOLTS FBK	0	0	0	V		V0	W4
609	qx	AUTOTUNE	METHOD	0	1	0		0: 4Q MULTI 1: 2Q MULTI	V1	W1
610	qy	PRESET SPEEDS	GRAY SCALE	0	1	0			V0	W0
611	qz	SRAMP	ACCEL 0 JERK 2	0.00	100.00	20.00	%		V0	W0
612	r0	SRAMP	ACCEL 1 JERK 2	0.00	100.00	20.00	%		V0	W0
613	r1	SRAMP	DECEL 0 JERK 2	0.00	100.00	20.00	%		V0	W0
614	r2	SRAMP	DECEL 1 JERK 2	0.00	100.00	20.00	%		V0	W0
617	r5	FIELD CONTROL	FIELD I THRESH	0.00	100.00	80.00	%		V0	W0
618	r6	FIELD CONTROL	UP TO FIELD	0	1	0			V0	W4
620	r8	RAMPS	INVERT	0	1	0			V0	W0
626	re	DRIVE INFO	FRAME ID	0	0	0			V0	W4
628	rg	CONFIGURE DRIVE	UDP USE OP PORT	0	1	0			V0	W0
629	rh	LINK 13	DESTINATION TAG	0	1276	683			V0	W2
630	ri	LINK 14	DESTINATION TAG	0	1276	684			V0	W2

Tag	Mn	MMI Block Name	MMI Parameter Name	Minimum	Maximum	Default	Units	Range	Notes	
631	rj	LINK 15	DESTINATION TAG	0	1276	685			V0	W2
632	rk	LINK 17	DESTINATION TAG	0	1276	678			V0	W2
633	rl	LINK 18	DESTINATION TAG	0	1276	679			V0	W2
634	rm	LINK 19	DESTINATION TAG	0	1276	699			V0	W2
635	rn	LINK 20	SOURCE TAG	-1276	1276	680			V0	W2
636	ro	LINK 21	SOURCE TAG	-1276	1276	681			V0	W2
637	rp	LINK 22	SOURCE TAG	-1276	1276	682			V0	W2
638	rq	LINK 23	SOURCE TAG	-1276	1276	674			V0	W2
639	rr	LINK 24	SOURCE TAG	-1276	1276	675			V0	W2
640	rs	LINK 25	SOURCE TAG	-1276	1276	676			V0	W2
641	rt	LINK 26	SOURCE TAG	-1276	1276	677			V0	W2
642	ru	LINK 27	SOURCE TAG	-1276	1276	264			V0	W2
643	rv	LINK 28	SOURCE TAG	-1276	1276	85			V0	W2
644	rw	LINK 29	SOURCE TAG	-1276	1276	86			V0	W2
645	rx	LINK 30	SOURCE TAG	-1276	1276	417			V0	W2
646	ry	LINK 31	SOURCE TAG	-1276	1276	427			V0	W2
647	rz	LINK 32	SOURCE TAG	-1276	1276	707			V0	W2
648	s0	LINK 33	SOURCE TAG	-1276	1276	708			V0	W2
649	s1	LINK 34	SOURCE TAG	-1276	1276	441			V0	W2
650	s2	LINK 35	SOURCE TAG	-1276	1276	451			V0	W2
651	s3	LINK 36	SOURCE TAG	-1276	1276	706			V0	W2
652	s4	LINK 37	SOURCE TAG	-1276	1276	69			V0	W2
653	s5	LINK 38	SOURCE TAG	-1276	1276	70			V0	W2
654	s6	LINK 39	SOURCE TAG	-1276	1276	572			V0	W2
655	s7	LINK 40	SOURCE TAG	-1276	1276	589			V0	W2
656	s8	LINK 41	DESTINATION TAG	0	1276	687			V0	W2
657	s9	LINK 42	DESTINATION TAG	0	1276	689			V0	W2
658	sa	LINK 43	SOURCE TAG	-1276	1276	712			V0	W2
660	sc	LINK 44	SOURCE TAG	-1276	1276	713			V0	W2
662	se	LINK 45	SOURCE TAG	-1276	1276	189			V0	W2
664	sg	LINK 46	SOURCE TAG	-1276	1276	700			V0	W2
665	sh	LINK 46	DESTINATION TAG	0	1276	701			V0	W2
666	si	LINK 47	SOURCE TAG	-1276	1276	427			V0	W2
667	sj	LINK 47	DESTINATION TAG	0	1276	709			V0	W2

Tag	Mn	MMI Block Name		MMI Parameter Name	Minimum	Maximum	Default	Units	Range	Notes	
668	sk	LINK	48	SOURCE TAG	-1276	1276	425			V0	W2
669	sl	LINK	48	DESTINATION TAG	0	1276	710			V0	W2
670	sm	LINK	49	SOURCE TAG	-1276	1276	691			V0	W2
671	sn	LINK	49	DESTINATION TAG	0	1276	697			V0	W2
672	so	LINK	50	SOURCE TAG	-1276	1276	475			V0	W2
673	sp	LINK	50	DESTINATION TAG	0	1276	711			V0	W2
674	sq	ANALOG INPUT	1	OUTPUT	0.00	0.00	0.00	%		V0	W4
675	sr	ANALOG INPUT	3	OUTPUT	0.00	0.00	0.00	%		V0	W4
676	ss	ANALOG INPUT	4	OUTPUT	0.00	0.00	0.00	%		V0	W4
677	st	ANALOG INPUT	5	OUTPUT	0.00	0.00	0.00	%		V0	W4
678	su	ANALOG OUTPUT	1	INPUT	-300.00	300.00	0.00	%		V0	W0
679	sv	ANALOG OUTPUT	2	INPUT	-300.00	300.00	0.00	%		V0	W0
680	sw	DIGITAL INPUT	1	OUTPUT	0.00	0.00	0.00	%		V0	W4
681	sx	DIGITAL INPUT	2	OUTPUT	0.00	0.00	0.00	%		V0	W4
682	sy	DIGITAL INPUT	3	OUTPUT	0.00	0.00	0.00	%		V0	W4
683	sz	DIGITAL OUTPUT	1	INPUT	-300.00	300.00	0.00	%		V0	W0
684	t0	DIGITAL OUTPUT	2	INPUT	-300.00	300.00	0.00	%		V0	W0
685	t1	DIGITAL OUTPUT	3	INPUT	-300.00	300.00	0.00	%		V0	W0
686	t2	ADVANCED	1	INPUT 1	-32768.00	32768.00	0.00	%		V0	W0
687	t3	ADVANCED	1	INPUT 2	-32768.00	32768.00	0.00	%		V0	W0
688	t4	ADVANCED	2	INPUT 1	-32768.00	32768.00	0.00	%		V0	W0
689	t5	ADVANCED	2	INPUT 2	-32768.00	32768.00	0.00	%		V0	W0
691	t7	MIN SPEED		OUTPUT	0.00	0.00	0.00	%		V1	W4
693	t9	COMMS PORT	1	ERROR REPORT	0x0000	0xFFFF	0x00C0			V0	W0
697	td	RAMPS		RAMP INPUT	-105.00	105.00	0.00	%		V1	W0
698	te	JOG/SLACK		JOG/SLACK	0.00	0.00	0.00	%		V1	W4
699	tf	STANDSTILL		INPUT	-300.00	300.00	0.00	%		V0	W0
700	tg	DEADBAND		OUTPUT	0.00	0.00	0.00	%		V1	W4
701	th	SETPOINT SUM	1	INPUT 1	-300.00	300.00	0.00	%		V1	W0
702	ti	SETPOINT SUM	1	OUTPUT 1	0.00	0.00	0.00	%		V0	W4
703	tj	SETPOINT SUM	1	OUTPUT 0	0.00	0.00	0.00	%		V0	W4
704	tk	SETPOINT SUM	2	SIGN 1	0	1	1		0: NEGATIVE 1: POSITIVE	V1	W0

Tag	Mn	MMI Block Name	MMI Parameter Name	Minimum	Maximum	Default	Units	Range	Notes	
705	tl	SETPOINT SUM 2	SIGN 0	0	1	1		0: NEGATIVE 1: POSITIVE	V1	W0
706	tm	DIAMETER CALC.	OUTPUT	0.00	0.00	0.00	%		V1	W4
707	tn	TORQUE CALC.	POS. I CLAMP	0.00	0.00	0.00	V		V0	W4
708	to	TORQUE CALC.	NEG. I CLAMP	0.00	0.00	0.00	V		V0	W4
709	tp	PROFILED GAIN	DIAMETER	0.00	100.00	10.00	%		V1	W0
710	tq	PROFILED GAIN	MIN DIAMETER	0.00	100.00	10.00	%		V1	W0
711	tr	PID	PROP. GAIN	0.0	100.0	1.0			V1	W0
712	ts	ADVANCED 1	OUTPUT	0.00	0.00	0.00	V		V0	W4
713	tt	ADVANCED 2	OUTPUT	0.00	0.00	0.00	V		V0	W4
714	tu	5703 OUT	INPUT	-300.00	300.00	0.00	%		V0	W0
720	u0	LINK 51	SOURCE TAG	-1276	1276	0			V0	W2
721	u1	LINK 51	DESTINATION TAG	0	1276	0			V0	W2
722	u2	LINK 52	SOURCE TAG	-1276	1276	0			V0	W2
723	u3	LINK 52	DESTINATION TAG	0	1276	0			V0	W2
724	u4	LINK 53	SOURCE TAG	-1276	1276	0			V0	W2
725	u5	LINK 53	DESTINATION TAG	0	1276	0			V0	W2
726	u6	LINK 54	SOURCE TAG	-1276	1276	0			V0	W2
727	u7	LINK 54	DESTINATION TAG	0	1276	0			V0	W2
728	u8	LINK 55	SOURCE TAG	-1276	1276	0			V0	W2
729	u9	LINK 55	DESTINATION TAG	0	1276	0			V0	W2
730	ua	LINK 56	SOURCE TAG	-1276	1276	0			V0	W2
731	ub	LINK 56	DESTINATION TAG	0	1276	0			V0	W2
732	uc	LINK 57	SOURCE TAG	-1276	1276	0			V0	W2
733	ud	LINK 57	DESTINATION TAG	0	1276	0			V0	W2
734	ue	LINK 58	SOURCE TAG	-1276	1276	0			V0	W2
735	uf	LINK 58	DESTINATION TAG	0	1276	0			V0	W2
736	ug	LINK 59	SOURCE TAG	-1276	1276	0			V0	W2
737	uh	LINK 59	DESTINATION TAG	0	1276	0			V0	W2
738	ui	LINK 60	SOURCE TAG	-1276	1276	0			V0	W2
739	uj	LINK 60	DESTINATION TAG	0	1276	0			V0	W2
740	uk	LINK 61	SOURCE TAG	-1276	1276	0			V0	W2
741	ul	LINK 61	DESTINATION TAG	0	1276	0			V0	W2
742	um	LINK 62	SOURCE TAG	-1276	1276	0			V0	W2

Tag	Mn	MMI Block Name	MMI Parameter Name	Minimum	Maximum	Default	Units	Range	Notes	
743	un	LINK 62	DESTINATION TAG	0	1276	0			V0	W2
744	uo	LINK 63	SOURCE TAG	-1276	1276	0			V0	W2
745	up	LINK 63	DESTINATION TAG	0	1276	0			V0	W2
746	uq	LINK 64	SOURCE TAG	-1276	1276	0			V0	W2
747	ur	LINK 64	DESTINATION TAG	0	1276	0			V0	W2
748	us	LINK 65	SOURCE TAG	-1276	1276	0			V0	W2
749	ut	LINK 65	DESTINATION TAG	0	1276	0			V0	W2
750	uu	LINK 66	SOURCE TAG	-1276	1276	0			V0	W2
751	uv	LINK 66	DESTINATION TAG	0	1276	0			V0	W2
752	uw	LINK 67	SOURCE TAG	-1276	1276	0			V0	W2
753	ux	LINK 67	DESTINATION TAG	0	1276	0			V0	W2
754	uy	LINK 68	SOURCE TAG	-1276	1276	0			V0	W2
755	uz	LINK 68	DESTINATION TAG	0	1276	0			V0	W2
756	v0	LINK 69	SOURCE TAG	-1276	1276	0			V0	W2
757	v1	LINK 69	DESTINATION TAG	0	1276	0			V0	W2
758	v2	LINK 70	SOURCE TAG	-1276	1276	0			V0	W2
759	v3	LINK 70	DESTINATION TAG	0	1276	0			V0	W2
760	v4	LINK 71	SOURCE TAG	-1276	1276	0			V0	W2
761	v5	LINK 71	DESTINATION TAG	0	1276	0			V0	W2
762	v6	LINK 72	SOURCE TAG	-1276	1276	0			V0	W2
763	v7	LINK 72	DESTINATION TAG	0	1276	0			V0	W2
764	v8	LINK 73	SOURCE TAG	-1276	1276	0			V0	W2
765	v9	LINK 73	DESTINATION TAG	0	1276	0			V0	W2
766	va	LINK 74	SOURCE TAG	-1276	1276	0			V0	W2
767	vb	LINK 74	DESTINATION TAG	0	1276	0			V0	W2
768	vc	LINK 75	SOURCE TAG	-1276	1276	0			V0	W2
769	vd	LINK 75	DESTINATION TAG	0	1276	0			V0	W2
770	ve	LINK 76	SOURCE TAG	-1276	1276	0			V0	W2
771	vf	LINK 76	DESTINATION TAG	0	1276	0			V0	W2
772	vg	LINK 77	SOURCE TAG	-1276	1276	0			V0	W2
773	vh	LINK 77	DESTINATION TAG	0	1276	0			V0	W2
774	vi	LINK 78	SOURCE TAG	-1276	1276	0			V0	W2
775	vj	LINK 78	DESTINATION TAG	0	1276	0			V0	W2
776	vk	LINK 79	SOURCE TAG	-1276	1276	0			V0	W2

Tag	Mn	MMI Block Name		MMI Parameter Name	Minimum	Maximum	Default	Units	Range	Notes	
777	vl	LINK	79	DESTINATION TAG	0	1276	0			V0	W2
778	vm	LINK	80	SOURCE TAG	-1276	1276	0			V0	W2
779	vn	LINK	80	DESTINATION TAG	0	1276	0			V0	W2
780	vo	LOGIC FUNC	1	INPUT A	0	1	0			V0	W0
781	vp	LOGIC FUNC	1	INPUT B	0	1	0			V0	W0
782	vq	LOGIC FUNC	1	INPUT C	0	1	0			V0	W0
783	vr	LOGIC FUNC	1	TYPE	0	15	0		0: NOT(A) 1: AND(A,B,C) 2: NAND(A,B,C) 3: OR(A,B,C) 4: NOR(A,B,C) 5: XOR(A,B) 6: 0-1 EDGE(A) 7: 1-0 EDGE(A) 8: AND(A,B,!C) 9: OR(A,B,!C) 10: S FLIP-FLOP 11: R FLIP-FLOP 12: LATCH 13: SWITCH 14: (A AND B) OR C 15: (A OR B) AND C	V0	W0
784	vs	LOGIC FUNC	1	OUTPUT	0	1	0			V0	W4
785	vt	LOGIC FUNC	2	INPUT A	0	1	0			V0	W0
786	vu	LOGIC FUNC	2	INPUT B	0	1	0			V0	W0
787	vv	LOGIC FUNC	2	INPUT C	0	1	0			V0	W0
788	vw	LOGIC FUNC	2	TYPE	0	15	0		See Tag 783	V0	W0
789	vx	LOGIC FUNC	2	OUTPUT	0	1	0			V0	W4
790	vy	LOGIC FUNC	3	INPUT A	0	1	0			V0	W0
791	vz	LOGIC FUNC	3	INPUT B	0	1	0			V0	W0
792	w0	LOGIC FUNC	3	INPUT C	0	1	0			V0	W0
793	w1	LOGIC FUNC	3	TYPE	0	15	0		See Tag 783	V0	W0
794	w2	LOGIC FUNC	3	OUTPUT	0	1	0			V0	W4
795	w3	LOGIC FUNC	4	INPUT A	0	1	0			V0	W0
796	w4	LOGIC FUNC	4	INPUT B	0	1	0			V0	W0
797	w5	LOGIC FUNC	4	INPUT C	0	1	0			V0	W0
798	w6	LOGIC FUNC	4	TYPE	0	15	0		See Tag 783	V0	W0

Tag	Mn	MMI Block Name		MMI Parameter Name	Minimum	Maximum	Default	Units	Range	Notes	
799	w7	LOGIC FUNC	4	OUTPUT	0	1	0			V0	W4
800	w8	LOGIC FUNC	5	INPUT A	0	1	0			V0	W0
801	w9	LOGIC FUNC	5	INPUT B	0	1	0			V0	W0
802	wa	LOGIC FUNC	5	INPUT C	0	1	0			V0	W0
803	wb	LOGIC FUNC	5	TYPE	0	15	0		See Tag 783	V0	W0
804	wc	LOGIC FUNC	5	OUTPUT	0	1	0			V0	W4
805	wd	LOGIC FUNC	6	INPUT A	0	1	0			V0	W0
806	we	LOGIC FUNC	6	INPUT B	0	1	0			V0	W0
807	wf	LOGIC FUNC	6	INPUT C	0	1	0			V0	W0
808	wg	LOGIC FUNC	6	TYPE	0	15	0		See Tag 783	V0	W0
809	wh	LOGIC FUNC	6	OUTPUT	0	1	0			V0	W4
810	wi	LOGIC FUNC	7	INPUT A	0	1	0			V0	W0
811	wj	LOGIC FUNC	7	INPUT B	0	1	0			V0	W0
812	wk	LOGIC FUNC	7	INPUT C	0	1	0			V0	W0
813	wl	LOGIC FUNC	7	TYPE	0	15	0		See Tag 783	V0	W0
814	wm	LOGIC FUNC	7	OUTPUT	0	1	0			V0	W4
815	wn	LOGIC FUNC	8	INPUT A	0	1	0			V0	W0
816	wo	LOGIC FUNC	8	INPUT B	0	1	0			V0	W0
817	wp	LOGIC FUNC	8	INPUT C	0	1	0			V0	W0
818	wq	LOGIC FUNC	8	TYPE	0	15	0		See Tag 783	V0	W0
819	wr	LOGIC FUNC	8	OUTPUT	0	1	0			V0	W4
820	ws	LOGIC FUNC	9	INPUT A	0	1	0			V0	W0
821	wt	LOGIC FUNC	9	INPUT B	0	1	0			V0	W0
822	wu	LOGIC FUNC	9	INPUT C	0	1	0			V0	W0
823	wv	LOGIC FUNC	9	TYPE	0	15	0		See Tag 783	V0	W0
824	ww	LOGIC FUNC	9	OUTPUT	0	1	0			V0	W4
825	wx	LOGIC FUNC	10	INPUT A	0	1	0			V0	W0
826	wy	LOGIC FUNC	10	INPUT B	0	1	0			V0	W0
827	wz	LOGIC FUNC	10	INPUT C	0	1	0			V0	W0
828	x0	LOGIC FUNC	10	TYPE	0	15	0		See Tag 783	V0	W0
829	x1	LOGIC FUNC	10	OUTPUT	0	1	0			V0	W4
830	x2	VALUE FUNC	1	INPUT A	-32768.00	32768.00	0.00			V0	W0
831	x3	VALUE FUNC	1	INPUT B	-32768.00	32768.00	0.00			V0	W0
832	x4	VALUE FUNC	1	INPUT C	-32768.00	32768.00	0.00			V0	W0

Tag	Mn	MMI Block Name	MMI Parameter Name	Minimum	Maximum	Default	Units	Range	Notes	
833	x5	VALUE FUNC 1	TYPE	0	46	0		0: IF(C) -A 1: ABS(A+B+C) 2: SWITCH(A,B) 3: (A*B)/C 4: A+B+C 5: A-B-C 6: B<=A<=C 7: A>B+/-C 8: A>=B 9: ABS(A)>B+/-C 10: ABS(A)>=B 11: A(1+B) 12: IF(C) HOLD(A) 13: BINARY DECODE 14: ON DELAY 15: OFF DELAY 16: TIMER 17: MINIMUM PULSE 18: PULSE TRAIN 19: WINDOW 20: UP/DWN COUNTER 21: (A*B)/C ROUND 22: WINDOW NO HYST 23: WIND A>=B,A<=C 24: A<=B 25: ((A*B)/100)+C 26: MIN(A,B,C) 27: MAX(A,B,C) 28: PROFILE SQRT 29: PROFILE LINEAR 30: PROFILE x^2 31: PROFILE x^3 32: PROFILE x^4 33: ON A>B, OFF A<C 34: (A+B) CLAMPED C 35: (A-B) CLAMPED C 36: (A*B) CLAMPED C 37: (A/B) CLAMPED C 38: A>=B:A, A<=C:0 39: (A * B) + C 40: A * (B + C)	V0	W0

Tag	Mn	MMI Block Name	MMI Parameter Name	Minimum	Maximum	Default	Units	Range	Notes	
								41: A * (B - C) 42: A * (1+B/C) 43: A * (1+(B * C)) 44: MONOSTABLE HIGH 45: MONOSTABLE LOW 46: FILTER		
834	x6	VALUE FUNC 1	OUTPUT	0.00	0.00	0.00			V0	W4
835	x7	VALUE FUNC 2	INPUT A	-32768.00	32768.00	0.00			V0	W0
836	x8	VALUE FUNC 2	INPUT B	-32768.00	32768.00	0.00			V0	W0
837	x9	VALUE FUNC 2	INPUT C	-32768.00	32768.00	0.00			V0	W0
838	xa	VALUE FUNC 2	TYPE	0	46	0		See Tag 833	V0	W0
839	xb	VALUE FUNC 2	OUTPUT	0.00	0.00	0.00			V0	W4
840	xc	VALUE FUNC 3	INPUT A	-32768.00	32768.00	0.00			V0	W0
841	xd	VALUE FUNC 3	INPUT B	-32768.00	32768.00	0.00			V0	W0
842	xe	VALUE FUNC 3	INPUT C	-32768.00	32768.00	0.00			V0	W0
843	xf	VALUE FUNC 3	TYPE	0	46	0		See Tag 833	V0	W0
844	xg	VALUE FUNC 3	OUTPUT	0.00	0.00	0.00			V0	W4
845	xh	VALUE FUNC 4	INPUT A	-32768.00	32768.00	0.00			V0	W0
846	xi	VALUE FUNC 4	INPUT B	-32768.00	32768.00	0.00			V0	W0
847	xj	VALUE FUNC 4	INPUT C	-32768.00	32768.00	0.00			V0	W0
848	xk	VALUE FUNC 4	TYPE	0	46	0		See Tag 833	V0	W0
849	xl	VALUE FUNC 4	OUTPUT	0.00	0.00	0.00			V0	W4
850	xm	VALUE FUNC 5	INPUT A	-32768.00	32768.00	0.00			V0	W0
851	xn	VALUE FUNC 5	INPUT B	-32768.00	32768.00	0.00			V0	W0
852	xo	VALUE FUNC 5	INPUT C	-32768.00	32768.00	0.00			V0	W0
853	xp	VALUE FUNC 5	TYPE	0	46	0		See Tag 833	V0	W0
854	xq	VALUE FUNC 5	OUTPUT	0.00	0.00	0.00			V0	W4
855	xr	VALUE FUNC 6	INPUT A	-32768.00	32768.00	0.00			V0	W0
856	xs	VALUE FUNC 6	INPUT B	-32768.00	32768.00	0.00			V0	W0
857	xt	VALUE FUNC 6	INPUT C	-32768.00	32768.00	0.00			V0	W0
858	xu	VALUE FUNC 6	TYPE	0	46	0		See Tag 833	V0	W0
859	xv	VALUE FUNC 6	OUTPUT	0.00	0.00	0.00			V0	W4
860	xw	VALUE FUNC 7	INPUT A	-32768.00	32768.00	0.00			V0	W0
861	xx	VALUE FUNC 7	INPUT B	-32768.00	32768.00	0.00			V0	W0
862	xy	VALUE FUNC 7	INPUT C	-32768.00	32768.00	0.00			V0	W0

Tag	Mn	MMI Block Name	MMI Parameter Name	Minimum	Maximum	Default	Units	Range	Notes	
863	xz	VALUE FUNC 7	TYPE	0	46	0		See Tag 833	V0	W0
864	y0	VALUE FUNC 7	OUTPUT	0.00	0.00	0.00			V0	W4
865	y1	VALUE FUNC 8	INPUT A	-32768.00	32768.00	0.00			V0	W0
866	y2	VALUE FUNC 8	INPUT B	-32768.00	32768.00	0.00			V0	W0
867	y3	VALUE FUNC 8	INPUT C	-32768.00	32768.00	0.00			V0	W0
868	y4	VALUE FUNC 8	TYPE	0	46	0		See Tag 833	V0	W0
869	y5	VALUE FUNC 8	OUTPUT	0.00	0.00	0.00			V0	W4
870	y6	VALUE FUNC 9	INPUT A	-32768.00	32768.00	0.00			V0	W0
871	y7	VALUE FUNC 9	INPUT B	-32768.00	32768.00	0.00			V0	W0
872	y8	VALUE FUNC 9	INPUT C	-32768.00	32768.00	0.00			V0	W0
873	y9	VALUE FUNC 9	TYPE	0	46	0		See Tag 833	V0	W0
874	ya	VALUE FUNC 9	OUTPUT	0.00	0.00	0.00			V0	W4
875	yb	VALUE FUNC 10	INPUT A	-32768.00	32768.00	0.00			V0	W0
876	yc	VALUE FUNC 10	INPUT B	-32768.00	32768.00	0.00			V0	W0
877	yd	VALUE FUNC 10	INPUT C	-32768.00	32768.00	0.00			V0	W0
878	ye	VALUE FUNC 10	TYPE	0	46	0		See Tag 833	V0	W0
879	yf	VALUE FUNC 10	OUTPUT	0.00	0.00	0.00			V0	W4
880	yg	DEMULTIPLEXER	OUTPUT 0	0	1	0			V0	W4
881	yh	DEMULTIPLEXER	OUTPUT 1	0	1	0			V0	W4
882	yi	DEMULTIPLEXER	OUTPUT 2	0	1	0			V0	W4
883	yj	DEMULTIPLEXER	OUTPUT 3	0	1	0			V0	W4
884	yk	DEMULTIPLEXER	OUTPUT 4	0	1	0			V0	W4
885	yl	DEMULTIPLEXER	OUTPUT 5	0	1	0			V0	W4
886	ym	DEMULTIPLEXER	OUTPUT 6	0	1	0			V0	W4
887	yn	DEMULTIPLEXER	OUTPUT 7	0	1	0			V0	W4
888	yo	DEMULTIPLEXER	OUTPUT 8	0	1	0			V0	W4
889	yp	DEMULTIPLEXER	OUTPUT 9	0	1	0			V0	W4
890	yq	DEMULTIPLEXER	OUTPUT 10	0	1	0			V0	W4
891	yr	DEMULTIPLEXER	OUTPUT 11	0	1	0			V0	W4
892	ys	DEMULTIPLEXER	OUTPUT 12	0	1	0			V0	W4
893	yt	DEMULTIPLEXER	OUTPUT 13	0	1	0			V0	W4
894	yu	DEMULTIPLEXER	OUTPUT 14	0	1	0			V0	W4
895	yv	DEMULTIPLEXER	OUTPUT 15	0	1	0			V0	W4
896	yw	DEMULTIPLEXER	INPUT	0x0000	0xFFFF	0x0000			V0	W0

Tag	Mn	MMI Block Name	MMI Parameter Name	Minimum	Maximum	Default	Units	Range	Notes	
897	yx	5703 OUT	DELAY	0	1000	0	ms		V0	W0
1128	hK	MULTIPLEXER	OUTPUT	0x0000	0xFFFF	0x0000			V0	W4
1129	hL	MULTIPLEXER	INPUT 0	0	1	0			V0	W0
1130	hM	MULTIPLEXER	INPUT 1	0	1	0			V0	W0
1131	hN	MULTIPLEXER	INPUT 2	0	1	0			V0	W0
1132	hO	MULTIPLEXER	INPUT 3	0	1	0			V0	W0
1133	hP	MULTIPLEXER	INPUT 4	0	1	0			V0	W0
1134	hQ	MULTIPLEXER	INPUT 5	0	1	0			V0	W0
1135	hR	MULTIPLEXER	INPUT 6	0	1	0			V0	W0
1136	hS	MULTIPLEXER	INPUT 7	0	1	0			V0	W0
1137	hT	MULTIPLEXER	INPUT 8	0	1	0			V0	W0
1138	hU	MULTIPLEXER	INPUT 9	0	1	0			V0	W0
1139	hV	MULTIPLEXER	INPUT 10	0	1	0			V0	W0
1140	hW	MULTIPLEXER	INPUT 11	0	1	0			V0	W0
1141	hX	MULTIPLEXER	INPUT 12	0	1	0			V0	W0
1142	hY	MULTIPLEXER	INPUT 13	0	1	0			V0	W0
1143	hZ	MULTIPLEXER	INPUT 14	0	1	0			V0	W0
1144	iA	MULTIPLEXER	INPUT 15	0	1	0			V0	W0
1145	iB	SELECT 1	INPUT 0	-32768.00	32768.00	0.00			V0	W0
1146	iC	SELECT 1	INPUT 1	-32768.00	32768.00	0.00			V0	W0
1147	iD	SELECT 1	INPUT 2	-32768.00	32768.00	0.00			V0	W0
1148	iE	SELECT 1	INPUT 3	-32768.00	32768.00	0.00			V0	W0
1149	iF	SELECT 1	INPUT 4	-32768.00	32768.00	0.00			V0	W0
1150	iG	SELECT 1	INPUT 5	-32768.00	32768.00	0.00			V0	W0
1151	iH	SELECT 1	INPUT 6	-32768.00	32768.00	0.00			V0	W0
1152	iI	SELECT 1	INPUT 7	-32768.00	32768.00	0.00			V0	W0
1153	iJ	SELECT 1	SELECT	0	7	0			V0	W0
1154	iK	SELECT 1	OUTPUT 0	0.00	0.00	0.00			V0	W4
1155	iL	SELECT 1	OUTPUT 1	0.00	0.00	0.00			V0	W4
1156	iM	SELECT 2	INPUT 0	-32768.00	32768.00	0.00			V0	W0
1157	iN	SELECT 2	INPUT 1	-32768.00	32768.00	0.00			V0	W0
1158	iO	SELECT 2	INPUT 2	-32768.00	32768.00	0.00			V0	W0
1159	iP	SELECT 2	INPUT 3	-32768.00	32768.00	0.00			V0	W0
1160	iQ	SELECT 2	INPUT 4	-32768.00	32768.00	0.00			V0	W0

Tag	Mn	MMI Block Name		MMI Parameter Name	Minimum	Maximum	Default	Units	Range	Notes	
1161	iR	SELECT	2	INPUT 5	-32768.00	32768.00	0.00			V0	W0
1162	iS	SELECT	2	INPUT 6	-32768.00	32768.00	0.00			V0	W0
1163	iT	SELECT	2	INPUT 7	-32768.00	32768.00	0.00			V0	W0
1164	iU	SELECT	2	SELECT	0	7	0			V0	W0
1165	iV	SELECT	2	OUTPUT 0	0.00	0.00	0.00			V0	W4
1166	iW	SELECT	2	OUTPUT 1	0.00	0.00	0.00			V0	W4
1169	iZ	CONFIGURE DRIVE		DUMP CHANGED	0	1	0			V1	W1
1172	jC	CONFIGURE DRIVE		DEBOUNCE DIGIN	0	1	1			V0	W0
1174	jE	CURRENT LOOP		PHASE ANGLE @ E	0.00	0.00	0.00	DEG		V0	W4
1175	jF	COMMS PORT	3	REPLY DELAY	0	255	2	ms		V0	W0
1185	jP	FIELD CONTROL		WEAK PID ERROR	0.00	0.00	0.00	%		V1	W4
1186	jQ	FIELD CONTROL		WEAK PID OUT	0.00	0.00	0.00	%		V1	W4
1187	jR	FIELD CONTROL		FIELD STATE	0	6	0		0: FIELD INIT 1: FIELD QUENCH 2: FIELD STANDBY 3: FIELD FULL FLD 4: FIELD TIMER 5: FIELD ERROR 6: LOCAL BEMF	V0	W4
1188	jS	LINK	11	DESTINATION TAG	0	1276	686			V0	W2
1189	jT	LINK	12	DESTINATION TAG	0	1276	688			V0	W2
1190	jU	LINK	16	DESTINATION TAG	0	1276	714			V0	W2
1198	kC	PLL		PLL STATE	0	6	0		0: STOPPED 1: 1ST CODING EDGE 2: READ EDGES 3: MAINS PERIOD 4: LOCKED 5: UNLOCKED 6: FAIL	V0	W4
1199	kD	PLL		PHASE ERROR	0.00	0.00	0.00			V0	W4
1201	kF	PLL		PLL MAINS FREQ	0.00	0.00	0.00			V0	W4
1204	kI	SEQUENCING		COMMS TIMEOUT	0.0	60.0	0.0	s		V0	W0
1220	kY	CONFIGURE DRIVE		AUTOMATIC SAVE	0	1	0			V0	W0
1226	lE	AUTOTUNE		STATE	0	3	0		0: IDLE 1: RUNNING 2: SUCCESS 3: FAILED	V1	W4

Tag	Mn	MMI Block Name	MMI Parameter Name	Minimum	Maximum	Default	Units	Range	Notes	
1227	IF	ENCODER 1	SPEED FEEDBACK	0.0	0.0	0.0	%		V0	W4
1230	II	ENCODER 2	ENCODER LINES	10	5000	1000			V0	W1
1231	IJ	ENCODER 2	ENCODER SIGN	0	1	1		0: NEGATIVE 1: POSITIVE	V0	W1
1232	IK	ENCODER 2	ENCODER RPM	0	6000	1000	RPM		V0	W1
1235	IN	ENCODER 2	UNFIL.ENCODER	0	0	0	RPM		V0	W4
1236	IO	ENCODER 2	ENCODER	0	0	0	RPM		V0	W4
1237	IP	ENCODER 2	SPEED FEEDBACK	0.0	0.0	0.0	%		V0	W4
1238	IQ	DIGITAL INPUT 4	OUTPUT	0.00	0.00	0.00	%		V0	W4
1239	IR	DIGITAL INPUT 4	VALUE FOR TRUE	-300.00	300.00	0.01	%		V0	W0
1240	IS	DIGITAL INPUT 4	VALUE FOR FALSE	-300.00	300.00	0.00	%		V0	W0
1241	IT	DIGITAL INPUT 5	OUTPUT	0.00	0.00	0.00	%		V0	W4
1242	IU	DIGITAL INPUT 5	VALUE FOR TRUE	-300.00	300.00	0.01	%		V0	W0
1243	IV	DIGITAL INPUT 5	VALUE FOR FALSE	-300.00	300.00	0.00	%		V0	W0
1246	IY	ALARM HISTORY	ALARM 1 NEWEST	0x0000	0xFFFF	0x0000			V0	W4
1247	IZ	ALARM HISTORY	ALARM 2	0x0000	0xFFFF	0x0000			V0	W4
1248	mA	ALARM HISTORY	ALARM 3	0x0000	0xFFFF	0x0000			V0	W4
1249	mB	ALARM HISTORY	ALARM 4	0x0000	0xFFFF	0x0000			V0	W4
1250	mC	ALARM HISTORY	ALARM 5	0x0000	0xFFFF	0x0000			V0	W4
1251	mD	ALARM HISTORY	ALARM 6	0x0000	0xFFFF	0x0000			V0	W4
1252	mE	ALARM HISTORY	ALARM 7	0x0000	0xFFFF	0x0000			V0	W4
1253	mF	ALARM HISTORY	ALARM 8	0x0000	0xFFFF	0x0000			V0	W4
1254	mG	ALARM HISTORY	ALARM 9	0x0000	0xFFFF	0x0000			V0	W4
1255	mH	ALARM HISTORY	ALARM 10 OLDEST	0x0000	0xFFFF	0x0000			V0	W4
1259	mL	PID	HI RES PROP GAIN	0.000	100.000	0.000			V1	W0
1267	mT	ENCODER 1	ENCODER TYPE	0	1	1		0: CLOCK/DIRECTION 1: QUADRATURE	V0	W1
1268	mU	ENCODER 2	ENCODER TYPE	0	1	1		0: CLOCK/DIRECTION 1: QUADRATURE	V0	W1
1273	mZ	FIELD CONTROL	BEMF SOURCE	0	1	0		0: LOCAL BEMF 1: BEMF INPUT	V1	W1
1274	nA	FIELD CONTROL	BEMF INPUT	-200.00	200.00	0.00	%		V1	W0
1275	nB	CURRENT LOOP	ISOL DMD SOURCE	0	1	0		0: ANIN 2 (A3) 1: FIELD I DEMAND	V1	W1

Tag	Mn	MMI Block Name	MMI Parameter Name	Minimum	Maximum	Default	Units	Range	Notes	
1276	nC	AUTOTUNE	ERROR TYPE	0	11	0		0: NO ERROR 1: OVER SPEED 2: FIELD ERROR 3: PULSE WIDTH 4: OVER CURRENT 5: TIMEOUT 6: AUTOTUNE ABORTED 7: FIRING ANGLE 8: PEAK/AVER. RATIO 9: UNBALANCED BRID. 10: NULL AVERAGE CUR 11: THYRISTOR OFF	V1	W4

Parameter Table: MMI Menu Order

.....DIAGNOSTICS		
.....SPEED DEMAND	[0089]	Speed Loop
.....SPEED FEEDBACK	[0207]	Feedbacks
.....SPEED ERROR	[0297]	Speed Loop
.....SPEED LOOP O/P	[0549]	Speed Loop
.....CURRENT DEMAND	[0299]	Current Loop
.....CURRENT FEEDBACK	[0298]	Feedbacks
.....CURRENT FBK.AMPS	[0538]	Current Loop
.....IaFbk UNFILTERED	[0065]	Current Loop
.....IaDmd UNFILTERED	[0066]	Current Loop
a.....POS. I CLAMP	[0087]	Current Loop
a.....NEG. I CLAMP	[0088]	Current Loop
.....ACTUAL POS I LIM	[0067]	Current Loop
.....ACTUAL NEG I LIM	[0061]	Current Loop
a.....INVERSE TIME O/P	[0203]	Inverse Time
a.....AT CURRENT LIMIT	[0042]	Current Loop
.....AT ZERO SPEED	[0077]	Standstill
a.....AT ZERO SETPOINT	[0078]	Standstill
a.....AT STANDSTILL	[0079]	Standstill
a.....RAMPING	[0113]	Ramps
a.....PROGRAM STOP	[0080]	Sequencing
.....COAST STOP	[0525]	Sequencing
.....DRIVE START	[0082]	Sequencing
.....DRIVE ENABLE	[0084]	Sequencing
a.....OPERATING MODE	[0212]	Jog/Slack
.....FIELD ENABLED	[0169]	Field Control
a.....FIELD DEMAND	[0183]	Field Control
.....FIELD I FBK.	[0300]	Field Control
.....FIELD I FBK.AMPS	[0539]	Field Control
.....UNFIL.FIELD FBK	[0181]	Feedbacks
a.....FLD.FIRING ANGLE	[0184]	Field Control
a.....ANIN 1 (A2)	[0050]	Analog Input
a.....ANIN 2 (A3)	[0051]	Analog Input
a.....ANIN 3 (A4)	[0052]	Analog Input
a.....ANIN 4 (A5)	[0053]	Analog Input
a.....ANIN 5 (A6)	[0054]	Analog Input
a.....ANOUT 1 (A7)	[0055]	Analog Output

```
a.......ANOUT 2 (A8)            [0056]          Analog Output
a.......START (C3)              [0068]          Sequencing
a.......DIGITAL INPUT C4        [0069]          Digital Input
a.......DIGITAL INPUT C5        [0070]          Digital Input
a.......DIGIN 1 (C6)            [0071]          Digital Input
a.......DIGIN 2 (C7)            [0072]          Digital Input
a.......DIGIN 3 (C8)            [0073]          Digital Input
a.......DIGOUT 1 (B5)           [0074]          Digital Output
a.......DIGOUT 2 (B6)           [0075]          Digital Output
a.......DIGOUT 3 (B7)           [0076]          Digital Output
........RAISE/LOWER O/P         [0264]          Raise/Lower
a.......PID OUTPUT              [0417]          PID
a.......PID CLAMPED             [0416]          PID
a.......PID ERROR               [0415]          PID
a.......SPT SUM OUTPUT          [0086]          Setpoint Sum
a.......RAMP OUTPUT             [0085]          Ramps
........PRESET O/P              [0572]          Preset Speeds
........SRAMP OUTPUT            [0589]          Sramp
........OUTPUT FPM              [0593]          Preset Speeds
........SPEED SETPOINT          [0063]          Speed Loop
a.......TERMINAL VOLTS          [0057]          Calibration
........BACK EMF                [0060]          Calibration
........ARM VOLTS FBK           [0605]          Feedbacks
........TACH INPUT              [0308]          Feedbacks
........UNFIL.TACH INPUT        [0058]          Calibration
........ENCODER                 [0206]          Encoder
........UNFIL.ENCODER           [0059]          Encoder
........UNFIL.SPD.FBK           [0062]          Speed Loop
........UNFIL.SPD.ERROR         [0064]          Speed Loop
........CONTACTOR CLOSED        [0083]          Sequencing
........HEALTH LED              [0122]          Alarms
........READY                   [0125]          Sequencing
........DRIVE RUNNING           [0376]          Sequencing
........SYSTEM RESET            [0374]          Sequencing
......SETUP PARAMETERS
........RAMPS
..........RAMP ACCEL TIME       [0002]          Ramps
..........RAMP DECEL TIME       [0003]          Ramps
a.........RAMP HOLD             [0118]          Ramps
..........INVERT                [0620]          Ramps
a.........RAMP INPUT            [0005]          Min Speed
```

```
a.........% S-RAMP              [0266]          Ramps
a.........RAMPING THRESH.       [0286]          Ramps
a.........AUTO RESET            [0287]          Ramps
a.........EXTERNAL RESET        [0288]          Ramps
a.........RESET VALUE           [0422]          Ramps
a.........MIN SPEED             [0126]          Min Speed
a.......AUX I/O
..........AUX START             [0161]          Sequencing
..........AUX JOG               [0227]          Sequencing
..........AUX ENABLE            [0168]          Sequencing
..........AUX DIGOUT 1          [0094]          Aux I/O
..........AUX DIGOUT 2          [0095]          Aux I/O
..........AUX DIGOUT 3          [0096]          Aux I/O
..........ANOUT 1               [0128]          Aux I/O
..........ANOUT 2               [0129]          Aux I/O
..........JOG/SLACK             [0496]          Sequencing
..........ENABLE                [0497]          Sequencing
..........REM.SEQ.ENABLE        [0535]          Sequencing
a.........REM.SEQUENCE          [0536]          Sequencing
..........SEQ STATUS            [0537]          Sequencing
........OP-STATION
..........SET UP
............SETPOINT            [0512]          Op-Station
............JOG SETPOINT        [0513]          Op-Station
............LOCAL KEY ENABLE    [0511]          Op-Station
..........START UP VALUES
............INITIAL SETPOINT    [0519]          Op-Station
............INITIAL JOG         [0520]          Op-Station
............INITIAL DIR         [0516]          Op-Station
............INITIAL VIEW        [0518]          Op-Station
............INITIAL MODE        [0517]          Op-Station
..........LOCAL RAMP
............RAMP ACCEL TIME     [0514]          Op-Station
............RAMP DECEL TIME     [0515]          Op-Station
........JOG/SLACK
..........JOG SPEED 1           [0218]          Jog/Slack
..........JOG SPEED 2           [0219]          Jog/Slack
..........TAKE UP 1             [0253]          Jog/Slack
..........TAKE UP 2             [0254]          Jog/Slack
..........CRAWL SPEED           [0225]          Jog/Slack
..........MODE                  [0228]          Jog/Slack
```

```
..........RAMP RATE              [0355]          Jog/Slack
a.......RAISE/LOWER
..........RESET VALUE            [0255]          Raise/Lower
..........INCREASE RATE          [0256]          Raise/Lower
..........DECREASE RATE          [0257]          Raise/Lower
..........RAISE INPUT            [0261]          Raise/Lower
..........LOWER INPUT            [0262]          Raise/Lower
..........MIN VALUE              [0258]          Raise/Lower
..........MAX VALUE              [0259]          Raise/Lower
a.........EXTERNAL RESET         [0307]          Raise/Lower
........PRESET SPEEDS
..........SELECT 1               [0560]          Preset Speeds
..........SELECT 2               [0561]          Preset Speeds
..........SELECT 3               [0562]          Preset Speeds
..........INVERT O/P             [0563]          Preset Speeds
..........MAX SPEED              [0559]          Preset Speeds
..........LIMIT                  [0600]          Preset Speeds
..........GRAY SCALE             [0610]          Preset Speeds
..........INPUT 0                [0564]          Preset Speeds
..........INPUT 1                [0565]          Preset Speeds
..........INPUT 2                [0566]          Preset Speeds
..........INPUT 3                [0567]          Preset Speeds
..........INPUT 4                [0568]          Preset Speeds
..........INPUT 5                [0569]          Preset Speeds
..........INPUT 6                [0570]          Preset Speeds
..........INPUT 7                [0571]          Preset Speeds
..........PRESET O/P             [0572]          Preset Speeds
..........OUTPUT FPM             [0593]          Preset Speeds
........SRAMP
..........INPUT                  [0574]          Sramp
..........RATE SELECT            [0575]          Sramp
..........RATE SET 0
............ACCEL 0              [0576]          Sramp
............DECEL 0              [0577]          Sramp
............ACCEL 0 JERK 1       [0578]          Sramp
............ACCEL 0 JERK 2       [0611]          Sramp
............DECEL 0 JERK 1       [0596]          Sramp
............DECEL 0 JERK 2       [0613]          Sramp
..........RATE SET 1
............ACCEL 1              [0579]          Sramp
............DECEL 1              [0580]          Sramp
```

```
............ACCEL 1 JERK 1        [0581]          Sramp
............ACCEL 1 JERK 2        [0612]          Sramp
............DECEL 1 JERK 1        [0597]          Sramp
............DECEL 1 JERK 2        [0614]          Sramp
..........AUTO RESET              [0582]          Sramp
..........EXTERNAL RESET          [0583]          Sramp
..........RESET VALUE             [0584]          Sramp
..........QUENCH                  [0585]          Sramp
..........AT SPEED LEVEL          [0586]          Sramp
..........AT SPEED                [0587]          Sramp
..........ACCEL OUTPUT            [0588]          Sramp
..........SRAMP OUTPUT            [0589]          Sramp
a.......SPECIAL BLOCKS
a.........PID
a...........PROP. GAIN            [0404]          Profiled Gain
a...........INT.TIME.CONST        [0402]          PID
a...........DERIVATIVE TC         [0401]          PID
a...........POSITIVE LIMIT        [0405]          PID
a...........NEGATIVE LIMIT        [0406]          PID
a...........O/P SCALER(TRIM)      [0407]          PID
a...........INPUT 1               [0410]          PID
a...........INPUT 2               [0411]          PID
a...........RATIO 1               [0412]          PID
a...........RATIO 2               [0413]          PID
a...........DIVIDER 1             [0418]          PID
a...........DIVIDER 2             [0414]          PID
a...........ENABLE                [0408]          PID
a...........INT. DEFEAT           [0409]          PID
a...........FILTER T.C.           [0403]          PID
a...........MODE                  [0473]          Profiled Gain
a...........MIN PROFILE GAIN      [0474]          Profiled Gain
a...........PROFILED GAIN         [0475]          Profiled Gain
a.........TENS+COMP CALC.
............STATIC COMP            [0487]          Diameter Calc
............DYNAMIC COMP           [0488]          Diameter Calc
............REWIND                 [0489]          Diameter Calc
a...........FIX.INERTIA COMP       [0479]          Diameter Calc
a...........VAR.INERTIA COMP       [0480]          Diameter Calc
a...........ROLL WIDTH/MASS        [0481]          Diameter Calc
............LINE SPEED SPT         [0498]          Diameter Calc
a...........FILTER T.C.            [0482]          Diameter Calc
```

```
a...........RATE CAL              [0483]          Diameter Calc
a...........NORMALISED dv/dt      [0484]          Diameter Calc
a...........INERTIA COMP O/P      [0485]          Diameter Calc
a...........TENSION SCALER        [0486]          Diameter Calc
a.........DIAMETER CALC.
a...........LINE SPEED            [0424]          Diameter Calc
a...........REEL SPEED            [0437]          Diameter Calc
a...........MIN DIAMETER          [0425]          Diameter Calc
a...........MIN SPEED             [0426]          Diameter Calc
a...........RESET VALUE           [0462]          Diameter Calc
a...........EXTERNAL RESET        [0463]          Diameter Calc
a...........RAMP RATE             [0453]          Diameter Calc
a...........DIAMETER              [0427]          Diameter Calc
............MOD OF LINE SPD       [0428]          Diameter Calc
............MOD OF REEL SPD       [0429]          Diameter Calc
............UNFILT DIAMETER       [0430]          Diameter Calc
a.........TAPER CALC.
a...........TAPER                 [0438]          Diameter Calc
a...........TENSION SPT.          [0439]          Diameter Calc
a...........TAPERED DEMAND        [0452]          Diameter Calc
a...........TENSION TRIM          [0440]          Diameter Calc
a...........TOT.TENS.DEMAND       [0441]          Diameter Calc
a.........TORQUE CALC.
a...........TORQUE DEMAND         [0432]          Torque Calc.
a...........TENSION ENABLE        [0433]          Torque Calc.
a...........OVER WIND             [0434]          Torque Calc.
a.........SETPOINT SUM 2
a...........INPUT 2               [0445]          Setpoint Sum
a...........INPUT 1               [0443]          Setpoint Sum
a...........INPUT 0               [0444]          Setpoint Sum
............RATIO 1               [0446]          Setpoint Sum
............RATIO 0               [0447]          Setpoint Sum
a...........DIVIDER 1             [0466]          Setpoint Sum
............DIVIDER 0             [0448]          Setpoint Sum
............LIMIT                 [0449]          Setpoint Sum
a...........SPT SUM OUTPUT        [0451]          Setpoint Sum
............STPT SUM 2 OUT 0      [0491]          Setpoint Sum
............STPT SUM 2 OUT 1      [0492]          Setpoint Sum
........FIELD CONTROL
..........FIELD ENABLE            [0170]          Field Control
..........FLD.CTRL MODE           [0209]          Field Control
```

```
..........FIELD I THRESH          [0617]          Field Control
..........UP TO FIELD             [0618]          Field Control
..........FLD.VOLTAGE VARS
............FLD.VOLTS RATIO       [0210]          Field Control
..........FLD.CURRENT VARS
a...........SETPOINT              [0171]          Field Control
............PROP. GAIN            [0173]          Field Control
............INT. GAIN             [0172]          Field Control
a...........FLD.WEAK VARS
..............FLD. WEAK ENABLE    [0174]          Field Control
..............EMF LEAD            [0175]          Field Control
..............EMF LAG             [0176]          Field Control
..............EMF GAIN            [0177]          Field Control
..............MIN FLD.CURRENT     [0179]          Field Control
..............MAX VOLTS           [0178]          Field Control
..............BEMF FBK LEAD       [0191]          Field Control
..............BEMF FBK LAG        [0192]          Field Control
a.........FLD.QUENCH DELAY        [0185]          Field Control
a.........FLD. QUENCH MODE        [0186]          Field Control
a.......CURRENT PROFILE
..........SPD BRK1 (LOW)          [0032]          Current Profile
..........SPD BRK2 (HIGH)         [0031]          Current Profile
..........IMAX BRK1(SPD1)         [0093]          Current Profile
..........IMAX BRK2(SPD2)         [0033]          Current Profile
........STOP RATES
..........STOP TIME               [0027]          Stop Rates
a.........STOP LIMIT              [0217]          Stop Rates
a.........CONTACTOR DELAY         [0302]          Stop Rates
..........CURR DECAY RATE         [0594]          Stop Rates
..........PROG STOP TIME          [0026]          Stop Rates
a.........PROG STOP LIMIT         [0216]          Stop Rates
..........PROG STOP I LIM         [0091]          Stop Rates
..........STOP ZERO SPEED         [0029]          Stop Rates
........CALIBRATION
..........CONFIGURE ENABLE        [0039]          Configure Drive
..........NOM MOTOR VOLTS         [0521]          Configure Drive
..........ARMATURE CURRENT        [0523]          Configure Drive
..........FIELD CURRENT           [0524]          Configure Drive
..........ARMATURE V CAL.         [0020]          Calibration
..........IR COMPENSATION         [0021]          Calibration
..........ENCODER RPM             [0022]          Encoder
```

```
..........ENCODER LINES          [0024]          Encoder
..........ANALOG TACH CAL        [0023]          Calibration
..........ZERO SPD. OFFSET       [0010]          Calibration
..........ARMATURE I (A9)        [0025]          Calibration
a.........SPDFBK ALM LEVEL       [0180]          Alarms
a.........STALL THRESHOLD        [0263]          Alarms
a.........STALL TRIP DELAY       [0224]          Alarms
..........REM TRIP DELAY         [0541]          Alarms
..........FIELD I CAL.           [0182]          Calibration
........INHIBIT ALARMS
..........FIELD FAIL             [0019]          Alarms
..........5703 RCV ERROR         [0111]          Alarms
a.........STALL TRIP             [0028]          Alarms
a.........TRIP RESET             [0305]          Alarms
..........SPEED FBK ALARM        [0081]          Alarms
..........ENCODER ALARM          [0092]          Alarms
..........REM TRIP INHIBIT       [0540]          Alarms
........CURRENT LOOP
..........MAIN CURR. LIMIT       [0421]          Current Loop
..........PROP. GAIN             [0016]          Current Loop
..........INT. GAIN              [0017]          Current Loop
..........AUTOTUNE               [0018]          Auto-Tune
..........DISCONTINUOUS          [0137]          Current Loop
a.........ADDITIONAL DEM         [0030]          Current Loop
a.........BIPOLAR CLAMPS         [0090]          Current Loop
..........REGEN ENABLE           [0201]          Current Loop
..........MASTER BRIDGE          [0527]          Current Loop
..........POS. I CLAMP IN        [0301]          Current Loop
a.........NEG. I CLAMP IN        [0048]          Current Loop
a.........I DMD. ISOLATE         [0119]          Current Loop
..........CUR.LIMIT/SCALER       [0015]          Current Loop
........SPEED LOOP
..........SPD.PROP.GAIN          [0014]          Speed Loop
..........SPD.INT.TIME           [0013]          Speed Loop
a.........INT. DEFEAT            [0202]          Speed Loop
..........PRESET TORQUE          [0595]          Speed Loop
..........PRESET T SCALE         [0604]          Speed Loop
..........ENCODER SIGN           [0049]          Encoder
..........SPEED FBK SELECT       [0047]          Speed Loop
..........SPD.FBK.FILTER         [0547]          Speed Loop
a.........ADVANCED
```

```
............ADAPTION
..............MODE              [0268]          Speed Loop
..............SPD BRK1 (LOW)     [0269]          Speed Loop
..............SPD BRK2 (HIGH)    [0270]          Speed Loop
..............PROP. GAIN        [0271]          Speed Loop
..............INT.TIME.CONST    [0272]          Speed Loop
............I GAIN IN RAMP      [0274]          Speed Loop
............ZERO SPD. QUENCH
..............ZERO SPD. LEVEL   [0284]          Speed Loop
..............ZERO IAD LEVEL    [0285]          Speed Loop
............INERTIA COMP
..............INERTIA           [0556]          Inertia Comp
..............FILTER            [0557]          Inertia Comp
..............RATE CAL          [0558]          Inertia Comp
..............DELTA             [0601]          Inertia Comp
..............UNSCALED OUTPUT   [0603]          Inertia Comp
..............INERTIA COMP O/P  [0602]          Inertia Comp
..........SETPOINTS
............SETPOINT 1          [0289]          Speed Loop
............SIGN 2 (A3)         [0009]          Speed Loop
............RATIO 2 (A3)        [0007]          Speed Loop
............SETPOINT 2 (A3)     [0290]          Speed Loop
............SETPOINT 3          [0291]          Speed Loop
............SETPOINT 4          [0041]          Speed Loop
............MAX DEMAND          [0357]          Speed Loop
............MIN DEMAND          [0358]          Speed Loop
........STANDSTILL
..........STANDSTILL LOGIC      [0011]          Standstill
..........ZERO THRESHOLD        [0012]          Standstill
..........SOURCE TAG            [0306]          Link
........SETPOINT SUM 1
..........RATIO 1               [0006]          Setpoint Sum
..........RATIO 0               [0208]          Setpoint Sum
a.........SIGN 1                [0008]          Setpoint Sum
a.........SIGN 0                [0292]          Setpoint Sum
a.........DIVIDER 1             [0419]          Setpoint Sum
..........DIVIDER 0             [0420]          Setpoint Sum
..........DEADBAND WIDTH        [0131]          Deadband
..........LIMIT                 [0375]          Setpoint Sum
a.........INPUT 2               [0423]          Setpoint Sum
a.........INPUT 1               [0100]          Deadband
```

```
a.........INPUT 0                [0309]          Setpoint Sum
.....PASSWORD
........ENTER PASSWORD           [0120]          Menus
a.......CHANGE PASSWORD          [0121]          Menus
.....ALARM STATUS
........LAST ALARM               [0528]          Alarms
a.......HEALTH WORD              [0115]          Alarms
a.......HEALTH STORE             [0116]          Alarms
........THERMISTOR STATE         [0337]          Alarms
........SPEED FBK STATE          [0472]          Alarms
a.......STALL TRIP               [0112]          Alarms
........REMOTE TRIP              [0542]          Alarms
.....MENUS
........VIEW LEVEL               [0037]          Menus
a.......LANGUAGE                 [0304]          Menus
.....SERIAL LINKS
........TEC OPTION
..........TEC OPTION TYPE        [0500]          Tec Option
..........TEC OPTION IN 1        [0501]          Tec Option
..........TEC OPTION IN 2        [0502]          Tec Option
..........TEC OPTION IN 3        [0503]          Tec Option
..........TEC OPTION IN 4        [0504]          Tec Option
..........TEC OPTION IN 5        [0505]          Tec Option
..........TEC OPTION FAULT       [0506]          Tec Option
..........TEC OPTION VER         [0507]          Tec Option
..........TEC OPTION OUT 1       [0508]          Tec Option
..........TEC OPTION OUT 2       [0509]          Tec Option
........SYSTEM PORT (P3)
..........P3 SETUP
............MODE                 [0130]          Comms Port
............5703 IN
..............SETPT. RATIO       [0132]          5703 In
..............SETPT. SIGN        [0133]          5703 In
..............RAW INPUT          [0187]          5703 In
..............SCALED INPUT       [0189]          5703 In
............BISYNCH SUPPORT
..............GROUP ID (GID)     [0329]          Comms Port
..............UNIT ID (UID)      [0330]          Comms Port
..............ERROR REPORT       [0332]          Comms Port
............BAUD RATE            [0198]          Comms Port
a.........DUMP CHANGED           [1169]          Configure Drive
```

```
..........DUMP MMI (TX)          [1167]          Configure Drive
..........UDP XFER (RX)          [1171]          Configure Drive
..........UDP XFER (TX)          [1170]          Configure Drive
..........VERSION NUMBER         [0155]          Drive Info
........PNO CONFIG
..........PNO 112                [0312]          PNO Config
..........PNO 113                [0313]          PNO Config
..........PNO 114                [0314]          PNO Config
..........PNO 115                [0315]          PNO Config
..........PNO 116                [0316]          PNO Config
..........PNO 117                [0317]          PNO Config
..........PNO 118                [0318]          PNO Config
..........PNO 119                [0319]          PNO Config
..........PNO 120                [0320]          PNO Config
..........PNO 121                [0321]          PNO Config
..........PNO 122                [0322]          PNO Config
..........PNO 123                [0323]          PNO Config
..........PNO 124                [0324]          PNO Config
..........PNO 125                [0325]          PNO Config
..........PNO 126                [0326]          PNO Config
..........PNO 127                [0327]          PNO Config
......SYSTEM
a.......CONFIGURE I/O
..........CONFIGURE ENABLE       [0039]          Configure Drive
..........ANALOG INPUTS
............ANIN 1 (A2)
..............CALIBRATION        [0230]          Analog Input
..............MAX VALUE          [0231]          Analog Input
..............MIN VALUE          [0232]          Analog Input
..............DESTINATION TAG    [0246]          Link
............ANIN 2 (A3)
..............CALIBRATION        [0233]          Analog Input
..............MAX VALUE          [0234]          Analog Input
..............MIN VALUE          [0235]          Analog Input
..............OUTPUT             [0493]          Analog Input
............ANIN 3 (A4)
..............CALIBRATION        [0236]          Analog Input
..............MAX VALUE          [0237]          Analog Input
..............MIN VALUE          [0238]          Analog Input
..............DESTINATION TAG    [0249]          Link
............ANIN 4 (A5)
```

```
..............CALIBRATION        [0239]          Analog Input
..............MAX VALUE           [0240]          Analog Input
..............MIN VALUE           [0241]          Analog Input
..............DESTINATION TAG     [0250]          Link
............ANIN 5 (A6)
..............CALIBRATION        [0242]          Analog Input
..............MAX VALUE           [0243]          Analog Input
..............MIN VALUE           [0244]          Analog Input
..............DESTINATION TAG     [0247]          Link
..........ANALOG OUTPUTS
............ANOUT 1 (A7)
..............% TO GET 10V        [0245]          Analog Output
..............MODULUS             [0362]          Analog Output
..............OFFSET              [0464]          Analog Output
..............SOURCE TAG          [0251]          Link
............ANOUT 2 (A8)
..............% TO GET 10V        [0248]          Analog Output
..............MODULUS             [0363]          Analog Output
..............OFFSET              [0465]          Analog Output
..............SOURCE TAG          [0252]          Link
..........DIGITAL INPUTS
a...........DIGITAL INPUT C4
..............DESTINATION TAG     [0494]          Link
a...........DIGITAL INPUT C5
..............DESTINATION TAG     [0495]          Link
............DIGIN 1 (C6)
..............VALUE FOR TRUE      [0103]          Digital Input
..............VALUE FOR FALSE     [0104]          Digital Input
..............DESTINATION TAG     [0102]          Link
............DIGIN 2 (C7)
..............VALUE FOR TRUE      [0106]          Digital Input
..............VALUE FOR FALSE     [0107]          Digital Input
..............DESTINATION TAG     [0105]          Link
............DIGIN 3 (C8)
..............VALUE FOR TRUE      [0109]          Digital Input
..............VALUE FOR FALSE     [0110]          Digital Input
..............DESTINATION TAG     [0108]          Link
..........DIGITAL OUTPUTS
............DIGOUT 1 (B5)
..............THRESHOLD (>)       [0195]          Digital Output
..............MODULUS             [0043]          Digital Output
```

```
..............SOURCE TAG          [0097]          Link
..............INVERTED            [0359]          Digital Output
............DIGOUT 2 (B6)
..............THRESHOLD (>)       [0196]          Digital Output
..............MODULUS             [0044]          Digital Output
..............SOURCE TAG          [0098]          Link
..............INVERTED            [0360]          Digital Output
............DIGOUT 3 (B7)
..............THRESHOLD (>)       [0197]          Digital Output
..............MODULUS             [0045]          Digital Output
..............SOURCE TAG          [0099]          Link
..............INVERTED            [0361]          Digital Output
..........CONFIGURE 5703
............SOURCE TAG            [0134]          Link
............DESTINATION TAG       [0135]          Link
..........BLOCK DIAGRAM
............RAMP O/P DEST         [0293]          Link
............SPT SUM 1 DEST        [0294]          Link
............PID O/P DEST          [0400]          Link
............DIAMETER              [0431]          Link
............TAPER                 [0442]          Link
............SETPOINT SUM 2        [0450]          Link
............POS. I CLAMP          [0435]          Link
............NEG. I CLAMP          [0436]          Link
............TENS+COMP CALC.       [0478]          Link
............RAISE/LOWER DEST      [0260]          Link
............PRESET DEST           [0573]          Link
............SRAMP DEST            [0590]          Link
a.........INTERNAL LINKS
a...........LINK 1
..............SOURCE TAG          [0364]          Link
..............DESTINATION TAG     [0365]          Link
a...........LINK 2
..............SOURCE TAG          [0366]          Link
..............DESTINATION TAG     [0367]          Link
a...........LINK 3
..............SOURCE TAG          [0368]          Link
..............DESTINATION TAG     [0369]          Link
a...........LINK 4
..............SOURCE TAG          [0370]          Link
..............DESTINATION TAG     [0371]          Link
```

```
a...........LINK 5
.............SOURCE TAG         [0454]          Link
.............DESTINATION TAG    [0455]          Link
a...........LINK 6
.............SOURCE TAG         [0456]          Link
.............DESTINATION TAG    [0457]          Link
a...........LINK 7
.............SOURCE TAG         [0458]          Link
.............DESTINATION TAG    [0459]          Link
a...........LINK 8
.............SOURCE TAG         [0460]          Link
.............DESTINATION TAG    [0461]          Link
a...........LINK 9
.............SOURCE TAG         [0467]          Link
.............DESTINATION TAG    [0468]          Link
a...........LINK 10
.............SOURCE TAG         [0469]          Link
.............DESTINATION TAG    [0470]          Link
a...........LINK 11
.............SOURCE TAG         [0390]          Link
.............DESTINATION TAG    [0391]          Link
.............ADVANCED           [0392]          Advanced
.............MODE               [0393]          Advanced
.............AUX.SOURCE         [0394]          Link
a...........LINK 12
.............SOURCE TAG         [0395]          Link
.............DESTINATION TAG    [0396]          Link
.............ADVANCED           [0397]          Advanced
.............MODE               [0398]          Advanced
.............AUX.SOURCE         [0399]          Link
a.......miniLINK
a.........VALUE 1               [0339]          Minilink
a.........VALUE 2               [0340]          Minilink
a.........VALUE 3               [0341]          Minilink
a.........VALUE 4               [0342]          Minilink
a.........VALUE 5               [0343]          Minilink
a.........VALUE 6               [0344]          Minilink
a.........VALUE 7               [0345]          Minilink
a.........VALUE 8               [0379]          Minilink
a.........VALUE 9               [0380]          Minilink
a.........VALUE 10              [0381]          Minilink
```

a.....VALUE 11	[0382]	Minilink
a.....VALUE 12	[0383]	Minilink
a.....VALUE 13	[0384]	Minilink
a.....VALUE 14	[0385]	Minilink
a.....LOGIC 1	[0346]	Minilink
a.....LOGIC 2	[0347]	Minilink
a.....LOGIC 3	[0348]	Minilink
a.....LOGIC 4	[0349]	Minilink
a.....LOGIC 5	[0350]	Minilink
a.....LOGIC 6	[0351]	Minilink
a.....LOGIC 7	[0352]	Minilink
a.....LOGIC 8	[0353]	Minilink
.....SAVE TO OP	[0624]	Configure Drive
.....LOAD FROM OP	[0625]	Configure Drive
.....SPEED DEMAND	[0089]	Speed Loop
.....SPEED FEEDBACK	[0207]	Feedbacks
.....CURRENT DEMAND	[0299]	Current Loop
.....CURRENT FEEDBACK	[0298]	Feedbacks
.....PHASE ANGLE @ E	[1174]	Current Loop
a.....ADDITIONAL DEM	[0030]	Current Loop
.....PARAMETER SAVE	**[0354]**	**Configure Drive**
.....CONFIGURE DRIVE		
.....CONFIGURE ENABLE	[0039]	Configure Drive
.....NOM MOTOR VOLTS	[0521]	Configure Drive
.....ARMATURE CURRENT	[0523]	Configure Drive
.....FIELD CURRENT	[0524]	Configure Drive
.....FLD.CTRL MODE	[0209]	Field Control
.....FLD.VOLTS RATIO	[0210]	Field Control
.....MAIN CURR. LIMIT	[0421]	Current Loop
.....AUTOTUNE	[0018]	Auto-Tune
.....SPEED FBK SELECT	[0047]	Speed Loop
.....ENCODER LINES	[0024]	Encoder
.....ENCODER RPM	[0022]	Encoder
.....ENCODER SIGN	[0049]	Encoder
.....SPD.INT.TIME	[0013]	Speed Loop
.....SPD.PROP.GAIN	[0014]	Speed Loop

Appendix D

Programming

This Appendix provides an introduction to programming the drive. It describes the function blocks and parameters available in both CELite and DSE Lite. The FUNCTION BLOCKS menu on the MMI provides access to these programming tool menu structures.

Programming Your Application D-1
- Programming with Block Diagrams D-1
- Modifying a Block Diagram D-1
- Saving Your Modifications D-4
- Understanding the Function Block Description D-4
- MMI Menu Maps D-5
- Function Blocks By Category D-6
- Compatibility with Earlier Versions of Firmware D-7

Function Block Descriptions D-10
- 5703 IN D-10
- 5703 OUT D-11
- ADVANCED D-12
- ALARM HISTORY D-15
- ALARMS D-16
- ANALOG INPUTS D-20
- ANALOG OUTPUTS D-22
- AUTOTUNE D-23
- AUX I/O D-25
- CALIBRATION D-26
- COMMS PORT D-29
- CONFIGURE DRIVE D-31
- CURRENT LOOP D-32
- CURRENT PROFILE D-37
- DEADBAND D-38
- DEMULTIPLEXER D-39
- DIAMETER CALC. D-40
- DIGITAL INPUTS D-48
- DIGITAL OUTPUTS D-51
- DRIVE INFO D-54
- ENCODER D-56
- FEEDBACKS D-59
- FIELD CONTROL D-60

INERTIA COMP D-68
LINK D-69
INVERSE TIME D-70
JOG/SLACK D-71
LOGIC FUNC D-74
MENUS D-80
MIN SPEED D-81
miniLINK D-82
MULTIPLEXER D-83
OP STATION D-84
PID D-86
PLL (PHASE LOCKED LOOP) D-91
PNO CONFIG D-92
PRESET SPEEDS D-93
PROFILED GAIN D-96
RAISE/LOWER D-98
RAMPS D-101
SELECT D-107
SEQUENCING D-108
SETPOINT SUM D-111
SPEED LOOP D-114
SRAMP D-121
STANDSTILL D-124
STOP RATES D-126
TEC OPTION D-129
TORQUE CALC. D-131
VALUE FUNC D-132
The Default Application D-143
Block Diagrams D-143
Programming Block Diagram - Sheet 1 D-144
Programming Block Diagram - Sheet 2 D-145
Programming Block Diagram - Sheet 3 D-146
Programming Block Diagram - Sheet 4 D-147
Main Block Diagram D-148
Field Control Block Diagram D-149
Start/Healthy Logic Block Diagram D-150
Functional Block Diagram D-151

Programming Your Application

Programming with Block Diagrams

We reccomend that you use a suitable programming tool (such as “ConfigEd Lite” which is Parker SSD Drives’ block programming software) to program the Drive for specific applications. It is however possible to use the Keypad.

NOTE **The Menus on the MMI contain parameters that don't necessarily reside in similarly-named function blocks in our Configuration Tool. To locate the function block for a parameter when using the MMI, hold the "M" key down when editing the parameter. This will display the Tag number. You can find the details for every Tag in this Appendix: Parameter Specification Tables. Alternatively, the Parameter Table in Appendix C: "Parameter Specifications" provides a quick reference from the MMI list to the associated function block.**

The Drive is supplied with a basic set-up which can be used as a starting point for application-specific programming. This programming could simply involve the inputting of parameter values, or it may require the making or breaking of programmable links, which is a feature of this unit.

Block diagram programming provides a visual method of planning the software to suit your application. The basic block diagram is provided at the end of this Appendix and shows the software connections consisting of *function blocks* and *links:*

- Each function block contains the parameters required for setting-up a particular processing feature. Sometimes more than one function block is provided for a feature, i.e. for multiple digital inputs.
- Software links are used to connect the function blocks. Each link transfers the value of an output parameter to an input parameter of another (or the same) function block.

Each individual block is a processing feature: it takes the input parameter, processes the information, and makes the result available as one or more output parameters.

Modifying a Block Diagram

Operating and Configuration Modes

MMI Menu Map

1 SYSTEM

2 CONFIGURE I/O

CONFIGURE ENABLE

There are two modes of operation used while modifying a block diagr*am: Operating* and C*onfiguration* modes.

The CONFIGURE ENABLE command is used to toggle between these two modes of operation.

DEFAULT

Operating Mode (CONFIGURE ENABLE = DISABLED)

In Operating mode you can change parameter values. The Drive can be running or stopped. Note that some parameters can only be changed when the Drive is stopped. It is not possible to modify the internal links when the Drive is in Operating mode.

Configuration Mode (CONFIGURE ENABLE = ENABLED)

In the configuration mode you can modify connections between the function blocks in the drive. You can also change parameter values, as above. The Drive cannot run in this mode. Output values are not updated.

Making and Breaking Function Block Connections

Links can be changed, added or deleted from a block diagram whilst in the Configuration mode. There are 80 general-purpose links available, each has its own identification number (“link” number). You make a link by setting the link’s “source” and “destination” tags to be the two parameter tag numbers to be linked. The outputs of function blocks are not updated whilst in this mode.

NOTE **Links 1 to 50 are pre-connected between certain blocks and form the connections shown in the Default Block Diagram. Any of these links can be re-used elsewhere in the block diagram.**

The functions of the special links in previous software versions, (LINK 11 and LINK 12), are replaced by the ADVANCED 1 AND ADVANCED 2 function blocks.

In previous software versions, certain links were single-ended "special links". This is no longer the case. All links can now be re-used anywhere in the block diagram.

Programming Rules

The following rules apply when programming:

Operating Mode (CONFIGURE ENABLE = DISABLED)

- Function block output parameter values cannot be changed (because they are a result of the function block’s processing)
- Function block input parameter values that receive their values from a link cannot be changed (as the link will overwrite the value when the Drive is running).

Configuration Mode (CONFIGURE ENABLE = ENABLED)

- A link’s destination tag must be set to an input parameter (only one link per input parameter).
- A link’s source tag may be set to any parameter. Both input and output parameters can be used as a source.
- Disable a link/function block by setting the “destination” and “source” tag to zero.
- To mark a link as a feedback link, set the source to the negative value of the tag to be connected. Feedback links are ignored when the function block execution order is determined.

Execution Rules

The complete block diagram is executed every 5ms, with individual control blocks executing within 1ms. Just before a function block is executed, all the links that have that block as their destination are executed, thereby copying new values in to the block’s parameter inputs. The input parameters are then processed to produce a new set of output parameters. The execution order of the blocks is automatically arranged for minimal delay.

The output value transferred by a link on execution is clamped to be between the maximum and minimum value for its destination input parameter.

The setting of the EMULATE 590P parameter (tag 162) in the CONFIGURE DRIVE function block affects the time constants of the PID block and the linking of parameters in the function block diagram:

- **When non-zero** the drive emulates the functionality of links in earlier firmware versions of the 590P, (firmware Versions 5.x and 7.x)
- **When zero (0x0000)** the behaviour changes so that the value is transferred, preserving the decimal place, (firmware Version 8.x and onwards).

Refer to "Compatibility with Earlier Versions of Firmware", page D-7, for more information.

To maintain compatibility, the new firmware emulates the functionality and behaviour of links in earlier firmware versions by defaulting the EMULATE 590P parameter to 0x0001 (non-zero).

MMI Menu Map

1 FUNCTION BLOCKS
2 MISCELLANEOUS
3 CONFIGURE DRIVE
- AUTOMATIC SAVE
- DUMP BLOCKS
- DUMP TRACE
- UDP USE OP PORT
- EMULATE 590P
- DEBOUNCE DIGIN

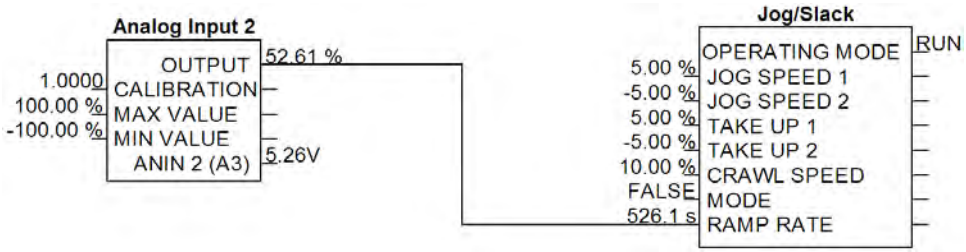

Figure 1 Operation of links (EMULATE 590P = non-zero : firmware Versions 5.x, 7.x, 8.x and onwards)

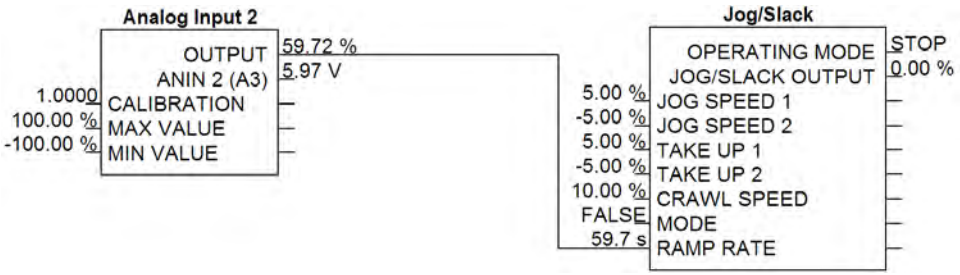

Figure 2 Operation of links (EMULATE 590P = zero : firmware Version 8.x and onwards)

The operation of a link is determined by the the number of decimal places of each parameter. Previous firmware versions ignored the decimal place when linking two parameters. For example, linking Analog Input 2 to the Jog Ramp rate gave a Ramp Rate of 526.1s for an input value of 52.61%. Compare the Figure above.

An additional enhancement is that all values are now held to over 4 decimal places of precision. This is also true of values transferred via links. In the above example, although the Jog Ramp Rate is shown as 59.7s, internally the value will match that of the output of Analog Input 2, to over 4 decimal places.

Saving Your Modifications

Ensure that CONFIGURE ENABLE = DISABLED before performing a PARAMETER SAVE.

If AUTOMATIC SAVE is set TRUE then changes made via the Operator Station are automatically saved.

If parameter values or links have been modified, the new settings must be saved. The Drive will then retain the new settings during power-down. Refer to Chapter 6: “The Keypad” - Saving Your Application.

Understanding the Function Block Description

The following function blocks show the parameter information necessary for programming the Drive. Input parameters are shown on the left hand side, and output parameters are shown on the right hand side of the block.

Default Value	The default value of the unmodified factory set-up
Input/Output Parameter Name	The name shown on ConfigEd Lite
Tag Number	Unique identification used for linking and communications

Decimal Places - some parameters are held in memory with two decimal places but are displayed with one decimal place. These parameters are indicated in the Parameter Description tables. The Range parameter highlights these with a " **(h)** " suffix.

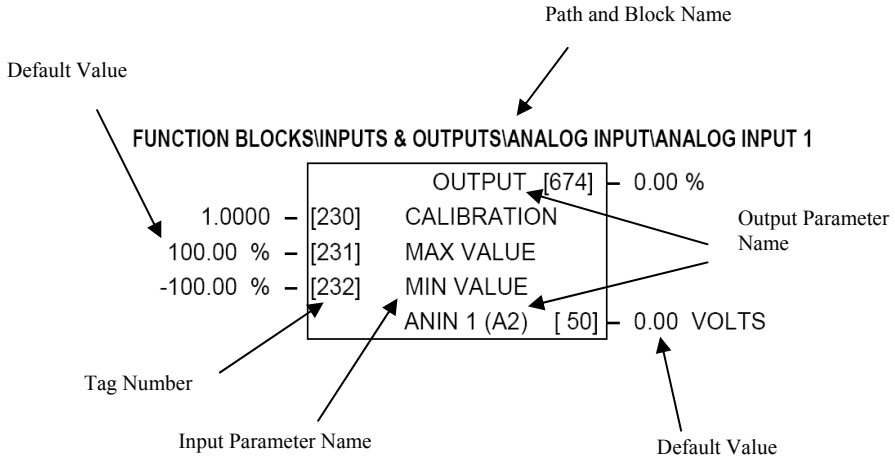

Figure D-3 Function Block Parameter Information

MMI Menu Maps

The function block descriptions include an easy-find menu showing the menu levels and titles encountered to find the appropriate menu title, and the parameters contained in the menu(s).

The Menu Maps are shown as if the view level is STANDARD.

Where there is more than one sub-menu, i.e. ANALOG INPUTS as illustrated, the parameters shown will be for the last sub-menu. In many cases, these parameters will reflect the name and number of the last sub-menu.

MMI parameters are named intuitively to make the keypad easier to use, however, they may vary slightly from function block names.

MMI Menu Map

1 SYSTEM

2 CONFIGURE I/O

3 ANALOG INPUTS

4 ANIN 1 (A2)

4 ANIN 5 (A6)

- CALIBRATION
- MAX VALUE
- MIN VALUE
- DESTINATION TAG

A function block may contain parameters that are contained within more than one MMI menu, for example FIELD CONTROL. In this case, the extra menus are indicated by >> in the MMI Menu Map.

MMI Menu Map

1 SETUP PARAMETERS

2 FIELD CONTROL

- FIELD ENABLE
- FLD.CTRL MODE
- FIELD I THRESH
- UP TO FIELD
- >> FLD.VOLTAGE VARS
- >> FLD.CURRENT VARS
- FLD.QUENCH DELAY
- FLD. QUENCH MODE

Function Blocks By Category

The function blocks described in this Appendix are arranged in alphabetical order, however, they are listed below by Category. They each appear as a Menu in the FUNCTION BLOCKS menu. To view the FUNCTION BLOCKS Menu, ADVANCED view level must be selected

MMI Menu Map

1 MENUS
VIEW LEVEL

Alarms					
ALARM HISTORY	D-15	ALARMS	D-16		
Communications					
5703 IN	D-10	COMMS PORT	D-29	TEC OPTION	D-129
5705 OUT	D-11	miniLINK	D-82		
Inputs & Outputs					
ANALOG INPUTS	D-20	AUX I/O	D-25	DIGITAL OUTPUTS	D-51
ANALOG OUTPUTS	D-22	DIGITAL INPUTS	D-48		
Menus					
MENUS	D-80	OP STATION	D-84		
Miscellaneous					
ADVANCED	D-12	DRIVE INFO	D-54	MULTIPLEXER	D-83
CONFIGURE DRIVE	D-31	LINKS	D-69	VALUE FUNC	D-132
DEMULITPLEXER	D-39	LOGIC FUNC	D-74		
Motor Control					
AUTOTUNE	D-23	ENCODER	D-56	INVERSE TIME	D-70
CALIBRATION	D-26	FEEDBACKS	D-59	PLL	D-91
CURRENT LOOP	D-32	FIELD CONTROL	D-61	SPEED LOOP	D-114
CURRENT PROFILE	D-37	INERTIA COMP	D-68		
Seq & Ref					
JOG/SLACK	D-71	SEQUENCING	D-108	STOP RATES	D-126
RAMPS	D-101	STANDSTILL	D-124		
Setpoint Funcs					
DEADBAND	D-38	PRESET SPEEDS	D-93	SETPOINT SUM	D-111
MIN SPEED	D-81	RAISE/LOWER	D-98	SRAMP	D-121
PID	D-86	SELECT	D-107		
Winder					
DIAMETER CALC	D-40	PROFILED GAIN	D-96	TORQUE CALC	D-131

Compatibility with Earlier Versions of Firmware

Version 8.x and onwards of the 590P is upwardly compatible with earlier firmware versions of the 590P. It will accept and run existing configurations when downloaded via UDP, from CELite or from a saved copy in the operator station's memory. These earlier versions of firmware will not however accept a configuration designed for use with Version 8.x firmware and onwards.

The implementation of the function block diagram destination links and source links is subtly different in version 8.x and onwards. All links have been rationalised to allow connection of any parameter to any input parameter. These enhancements will not interfere with operation of earlier configurations. The enhancements are designed to further improve the flexibility of the function block diagram.

In general, all "output" links have been replaced with the combination of a new output parameter and a new general purpose link. Similarly, all "input" links have been replaced with the combination of a new input parameter and a new general purpose link. Where a suitable output or input parameter already existed there was no need to create a new one, (for example, Configure 5703::Scaled Input already existed as a parameter).

As an illustration, consider the operation of Digital Input 2. Prior to Version 8.1 the output value was not available as an accessible parameter. It could be wired to an input parameter using its dedicated destination tag. By default it was connected to tag 118, RAMP HOLD.

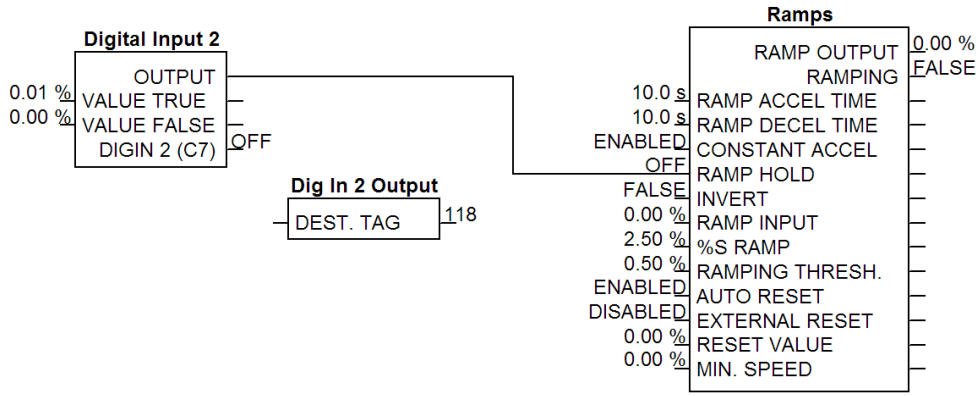

In the revised implementation, the output value is available as a new parameter, OUTPUT. This may be connected to any input parameter using any general purpose link. By default, Link 21 is used to connect OUTPUT (tag 681) to RAMP HOLD (tag 118).

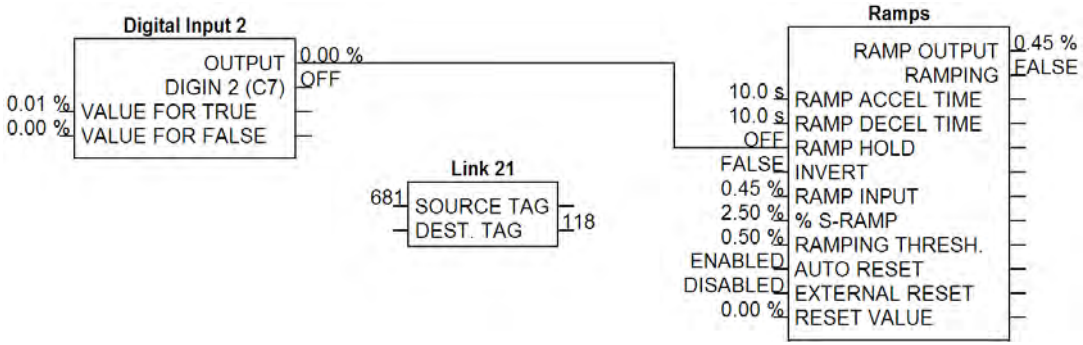

The following tables show the new input and output parameters available, and the allocation of links in the default configuration to emulate the behaviour of previous versions of firmware.

Enhancements to output links

Legacy implementation		Version 8.x and onwards.x implementation				
Digin1 (C6)::Destination Tag	[102] →	Digital Input 1::Output	[680] →	[635]	Link 20	[102] →
Digin2 (C7)::Destination Tag	[105] →	Digital Input 2::Output	[681] →	[636]	Link 21	[105] →
Digin3 (C8)::Destination Tag	[108] →	Digital Input 3::Output	[682] →	[637]	Link 22	[108] →
Digital Input C4::Destination Tag	[494] →	Digital Input 4::Digital Input C4	[69] →	[652]	Link 37	[494] →
Digital Input C5::Destination Tag	[495] →	Digital Input 5::Digital Input C5	[70] →	[653]	Link 38	[495] →
Configure 5703::Scaled Input	[135] →	5703 In::Scaled Input	[189] →	[662]	Link 45	[135] →
Anin 1 (A2)::Destination Tag	[246] →	Analog Input 1::Output	[674] →	[638]	Link 23	[246] →
Anin 3 (A4)::Destination Tag	[249] →	Analog Input 3::Output	[675] →	[639]	Link 24	[249] →
Anin 4 (A5)::Destination Tag	[250] →	Analog Input 4::Output	[676] →	[640]	Link 25	[250] →
Anin 5 (A6)::Destination Tag	[247] →	Analog Input 5::Output	[677] →	[641]	Link 26	[247] →
Raise/Lower Dest	[260] →	Raise/Lower::Output	[264] →	[642]	Link 27	[260] →
Ramp O/P Dest	[293] →	Ramps::Ramp Output	[85] →	[643]	Link 28	[293] →
SPT Sum 1 Dest	[294] →	Setpoint Sum 1::Spt Sum Output	[86] →	[644]	Link 29	[294] →
Link 11::Destination Tag	[391] →	Advanced 1::Output	[712] →	[658]	Link 43	[391] →
Link 12::Destination Tag	[396] →	Advanced 2::Output	[713] →	[660]	Link 44	[396] →
PID O/P Dest	[400] →	PID::PID Output	[417] →	[645]	Link 30	[400] →
Diameter	[431] →	Diameter Calc.::Diameter	[427] →	[646]	Link 31	[431] →
Pos I Clamp	[435] →	Torque Calc.::Pos. I Clamp	[707] →	[647]	Link 32	[435] →
Neg. I Clamp	[436] →	Torque Calc.::Neg. I Clamp	[708] →	[648]	Link 33	[436] →
Taper	[442] →	Diameter Calc.::Tot.Tens Demand	[441] →	[649]	Link 34	[442] →
Setpoint Sum 2	[450] →	Setpoint Sum 2::Spt Sum Output	[451] →	[650]	Link 35	[450] →

Legacy implementation	Version 8.x and onwards.x implementation	
Tens + Comp Calc. [478] →	Diameter Calc.::Output [706] →	[651] Link 36 [478] →
Preset Dest [573] →	Preset Speeds::Preset O/P [572] →	[654] Link 39 [573] →
Sramp Dest [590] →	Sramp::Sramp Output [589] →	[655] Link 40 [590] →

Enhancements to input links

Legacy implementation	Version 8.x and onwards.x implementation	
→ [097] Digout 1 (B5)::Source Tag	→ [097] Link 13 [629] →	[683] Digital Output 1::Input
→ [098] Digout 2 (B6)::Source Tag	→ [098] Link 14 [630] →	[684] Digital Output 2::Input
→ [099] Digout 3 (B7)::Source Tag	→ [099] Link 15 [631] →	[685] Digital Output 3::Input
→ [134] Configure 5703::Source Tag	→ [134] Link 16 [1190] →	[714] 5703 Out::Input
→ [251] Anout 1 (A7)::Source Tag	→ [251] Link 17 [632] →	[678] Analog Output 1::Input
→ [252] Anout 2 (A8)::Source Tag	→ [252] Link 18 [633] →	[679] Analog Output 2::Input
→ [306] Standstill::Source Tag	→ [306] Link 19 [634] →	[699] Standstill::Input
→ [390] Link 11::Source Tag	→ [390] Link 11 [1188] →	[686] Advanced 1::Input 1
→ [394] Link 11::Aux.Source	→ [394] Link 41 [656] →	[687] Advanced 1::Input 2
→ [395] Link 12::Source Tag	→ [395] Link 12 [1189] →	[688] Advanced 2::Input 1
→ [399] Link 12::Aux.Source	→ [399] Link 42 [657] →	[689] Advanced 2::Input 2

Simplification of function blocks

Some function blocks from previous versions of firmware have been re-arranged to clarify the functionality of each block. The changes are:

SETPOINT SUM 1:	The Deadband function has been extracted into a new DEADBAND function block.
5703:	This has been split into function blocks 5703 IN and 5703 OUT to improve function block execution order.
AUX IO:	This has been split into a new SEQUENCING function block and a smaller AUX I/O block.
PID:	The Gain Profile function has been extracted into a new PROFILED GAIN function block.
RAMPS:	The Minimum Speed function has been extracted into a new MIN SPEED function block.

In addition, the old Diameter Calc, Taper Calc and Tension & Comp blocks have been combined into a single block called Diameter Calc due to the close ties between these blocks.

Function Block Descriptions

NOTE **Remember to select the correct mode, Setup or Configuration, whilst editing. Refer to "Modifying a Block Diagram", page D-1. To view the FUNCTION BLOCKS Menu, ADVANCED view level must be selected.**

MMI Menu Map

1 MENUS
- VIEW LEVEL

5703 IN

MMI Menu Map

1 SERIAL LINKS

2 SYSTEM PORT (P3)

3 P3 SETUP

4 5703 IN
- SETPT. RATIO
- SETPT. SIGN
- RAW INPUT
- SCALED INPUT

This function block contains the parameters for scaling the setpoint that are received via the P3 comms port using the 5703 setpoint repeater protocol.

In the default configuration, the output of this block (SCALED INPUT) is added to analog inputs 1, 2 and 3 to form the setpoint.

FUNCTION BLOCKS\COMMUNICATIONS\5703 IN

	SCALED INPUT	[189]	– 0.00%
	RAW INPUT	[187]	– 0.00%
0.0000 –	[132] SETPT. RATIO		
POSITIVE –	[133] SETPT. SIGN		

5703 IN

Parameter	Tag	Range
SETPT. RATIO	**132**	**-3.0000 to 3.0000**
Input scaler.		
SETPT. SIGN	**133**	**NEGATIVE/ POSITIVE**
Input sign.		
SCALED INPUT	**189**	**— .xx %**
The scaled value received by the 5703 unit. This value is updated upon reception of a new message. If the drive is in Slave mode and no new messages have arrived, a 5703 RCV ERROR will occur. Note: in software versions prior to 5.17, this input is not updated when in Master mode.		
RAW INPUT	**187**	**— .xx %**
The unscaled value received via the P3 port.		

5703 OUT

MMI Menu Map

1 FUNCTION BLOCKS
2 COMMUNICATIONS
3 5703 OUT
- INPUT
- DELAY

This function block is used to define the value that is sent via the P3 port when the selected protocol is "5703 MASTER" or "5703 SLAVE".

FUNCTION BLOCKS\COMMUNICATIONS\5703 OUT

0.00 % –	[714]	INPUT
0 ms –	[897]	DELAY

- In 5703 MASTER mode, the INPUT value is transmitted with a minimum period of 5ms. This period may be increased using the DELAY parameter. Note that the delay is the time from the start of one transmission to the start of the next transmission. If the selected baud rate is low then the time to transmit the data may be greater than the delay time, in which case the delay parameter has no effect.
- In 5703 SLAVE mode, the INPUT value is transmitted every time a value is received. The DELAY parameter is ignored in this mode.

5703 OUT

Parameter	Tag	Range
INPUT	**714**	**-300.00 to 300.00 %**
The value that will be sent via the P3 port when the P3 MODE is either "5703 MASTER" or "5703 SLAVE".		
DELAY	**897**	**0 to 1000 ms**
A delay parameter that may be used when in 5703 MASTER mode to increase the time between successive transmissions of the 5703 setpoint value.		

ADVANCED

MMI Menu Map

1 SYSTEM
2 CONFIGURE I/O
3 INTERNAL LINKS
4 LINK 11
4 LINK 12
- SOURCE TAG
- DESTINATION TAG
- ADVANCED
- MODE
- AUX. SOURCE

These two blocks perform some simple functions. They are compatible with the special Link 11 and Link12 used in earlier versions of this product.

For new configurations, consider using the new VALUE and LOGIC function blocks.

FUNCTION BLOCKS\MISCELLANEOUS\ADVANCED\ADVANCED 1

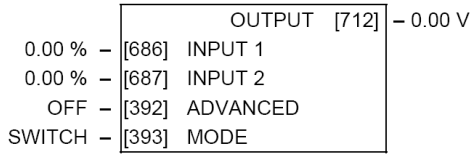

FUNCTION BLOCKS\MISCELLANEOUS\ADVANCED\ADVANCED 2

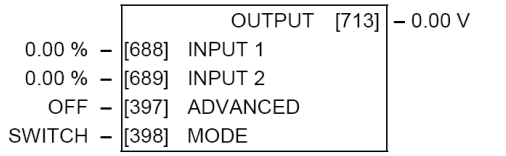

ADVANCED

Parameter	Tag	Range
INPUT 1 General purpose input.	**686, 688**	**-32768.00 to 32768.00 %**
INPUT 2 General purpose input.	**687, 689**	**-32768.00 to 32768.00 %**
ADVANCED Controls the OUTPUT parameter. When OFF, OUTPUT is the same as INPUT 1. When ON, OUTPUT is the result of the function selected by MODE.	**392, 397**	**OFF/ON**
MODE This determines which operation is performed on the INPUT 1 and INPUT 2. It can be combined with ADVANCED to dynamically switch the OUTPUT between INPUT 1 and the result of the selected function. The functionality of the various MODE selections are shown in the table. 0 : SWITCH 1 : INVERTER 2 : AND (logic) 3 : OR (boolean) 4 : SIGN CHANGER 5 : MODULUS 6 : COMPARATOR	**393, 398**	**See below**
OUTPUT Result of the selected function on the inputs.	**712, 713**	**— .xx V**

Functional Description

MODE	Description
SWITCH - switches the signal source between auxilliary and source analog or logic tags	If ADVANCED = OFF OUTPUT = SOURCE If ADVANCED = ON OUTPUT = INPUT 2
INVERTER - inverts the source logic signal	If ADVANCED = OFF OUTPUT = INPUT 1 If ADVANCED = ON OUTPUT = Logic Inversion of INPUT 1
AND - gives AND-ed result of source logic signal and an auxilliary source logic signal	If ADVANCED = OFF OUTPUT = INPUT 1 If ADVANCED = ON OUTPUT = INPUT 1 AND INPUT 2
OR - gives OR-ed result of source logic signal and an auxilliary source logic signal	If ADVANCED = OFF OUTPUT = INPUT 1 If ADVANCED = ON OUTPUT = INPUT 1 OR INPUT 2
SIGN CHANGER - reverses the sign of the source logic signal	If ADVANCED = OFF OUTPUT = INPUT 1 If ADVANCED = ON OUTPUT = Value sign change of INPUT 1
MODULUS - produces the modulus of the source logic signal	If ADVANCED = OFF OUTPUT = INPUT 1 If ADVANCED = ON OUTPUT = Modulus of INPUT 1
COMPARATOR - changes destination logic signal to TRUE when source analog signal is greater than auxilliary analog signal	If ADVANCED = OFF OUTPUT = INPUT 1 If ADVANCED = ON If INPUT 1 ≤ INPUT 2 OUTPUT = 0 If INPUT 1 > INPUT 2 OUTPUT = 1

Functional Description

The following diagram shows the internal schematic for a special link.

ADVANCED 1 & ADVANCED 2 (Link 11 & Link 12)

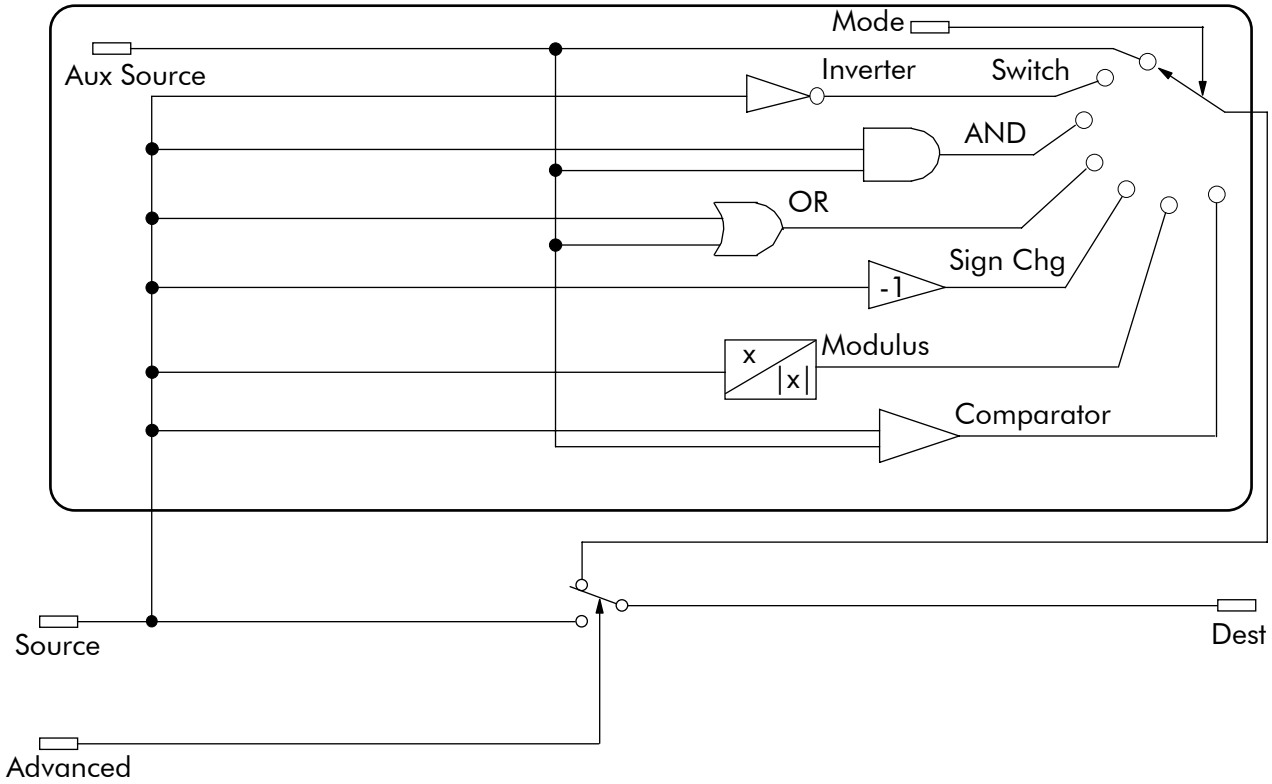

ALARM HISTORY

MMI Menu Map

1 FUNCTION BLOCKS
2 ALARMS
3 ALARM HISTORY
- ALARM 1 NEWEST
- ALARM 2
- ALARM 3
- ALARM 4
- ALARM 5
- ALARM 6
- ALARM 7
- ALARM 8
- ALARM 9
- ALARM 10 OLDEST

This function block records the last ten alarms. ALARM 1 NEWEST is the most recent alarm and will be the same as the ALARMS::LAST ALARM parameter when an alarm is active.

FUNCTION BLOCKS\ALARMS\ALARM HISTORY

ALARM 1 NEWEST	[1246]	0x0000
ALARM 2	[1247]	0x0000
ALARM 3	[1248]	0x0000
ALARM 4	[1249]	0x0000
ALARM 5	[1250]	0x0000
ALARM 6	[1251]	0x0000
AlARM 7	[1252]	0x0000
ALARM 8	[1253]	0x0000
ALARM 9	[1254]	0x0000
ALARM 10 OLDEST	[1255]	0x0000

ALARM HISTORY

Parameter	Tag	Range
ALARM 1 NEWEST	**1246**	**0x0000 to 0xFFFF**
The hexadecimal value of the most recent alarm. Refer to Chapter 7: “Trips and Fault Finding” - Alarm Messages.		
ALARM 2 - ALARM 9	**1247, 1248, 1249, 1250, 1251, 1252, 1253, 1254**	**0x0000 to 0xFFFF**
The second to ninth most recent alarms.		
ALARM 10 OLDEST	**1255**	**0x0000 to 0xFFFF**
The tenth most recent alarm.		

ALARMS

This block allows you to disable certain alarms and leave drive operation un-interrupted if the related fault occurs.

MMI Menu Map

1 ALARM STATUS
- LAST ALARM
- HEALTH WORD
- HEALTH STORE
- THERMISTOR STATE
- SPEED FBK STATE
- STALL TRIP
- REMOTE TRIP

MMI Menu Map

1 SETUP PARAMETERS

2 INHIBIT ALARMS
- FIELD FAIL
- 5703 RCV ERROR
- STALL TRIP
- TRIP RESET
- SPEED FBK ALARM
- ENCODER ALARM
- REM TRIP INHIBIT

MMI Menu Map

1 SETUP PARAMETERS

2 CALIBRATION
- SPDFBK ALM LEVEL
- STALL THRESHOLD
- STALL TRIP DELAY
- REM TRIP DELAY

MMI Menu Map

1 DIAGNOSTICS
- HEALTH LED

Caution

Do NOT inhibit any alarms if this might result in danger to personnel or equipment.

FUNCTION BLOCKS\ALARMS\ALARMS

		THERMISTOR STATE [337]	FALSE
		SPEED FBK STATE [472]	FALSE
		HEALTH LED [122]	FALSE
		HEALTH WORD [115]	0x0000
		HEALTH STORE [116]	0x0000
		REMOTE TRIP [542]	FALSE
		STALL TRIP [112]	FALSE
		LAST ALARM [528]	0x0000
ENABLED	[19]	FIELD FAIL	
ENABLED	[111]	5703 RCV ERROR	
ENABLED	[28]	STALL TRIP	
TRUE	[305]	TRIP RESET	
ENABLED	[81]	SPEED FBK ALARM	
ENABLED	[92]	ENCODER ALARM	
ENABLED	[540]	REM TRIP INHIBIT	
10.0 s	[541]	REM TRIP DELAY	
95.00 %	[263]	STALL THRESHOLD	
30.0 s	[224]	STALL TRIP DELAY	
50.0 %	[180]	SPDFBK ALM LEVEL	

ALARMS

Parameter	Tag	Range
FIELD FAIL	**19**	**ENABLED / INHIBITED**
Inhibits the field fail alarm.		
5703 RCV ERROR	**111**	**ENABLED / INHIBITED**
Inhibits 5703 serial communications receive error. Only active in Slave Mode.		
STALL TRIP	**28**	**ENABLED / INHIBITED**
Inhibits the stall trip alarm from tripping out the contactor. This is useful in applications requiring extended operation at zero speed.		
TRIP RESET	**305**	**FALSE / TRUE**
WhenTRIP RESET is changed from FALSE to TRUE any latched alarms are cleared. This feature can be used in applications where you want to reset the faults under your own control, rather than automatically with the Start/Run command.		
SPEED FBK ALARM	**81**	**ENABLED / INHIBITED**
Inhibits the speed feedback alarm.		
ENCODER ALARM	**92**	**ENABLED / INHIBITED**
Inhibits the encoder option board alarm.		
REM TRIP INHIBIT	**540**	**ENABLED / INHIBITED**

ALARMS

Parameter	Tag	Range
Inhibits the remote trip.		
REM TRIP DELAY	**541**	**0.1 to 600.0 s**
The delay between the remote trip alarm being activated and the drive tripping.		
STALL THRESHOLD	**263**	**0.00 to 200.00 %**
Stall comparator current feedback threshold level.		
STALL TRIP DELAY	**224**	**0.1 to 600.0 s**
Stall comparator time-out delay before stall output becomes true.		

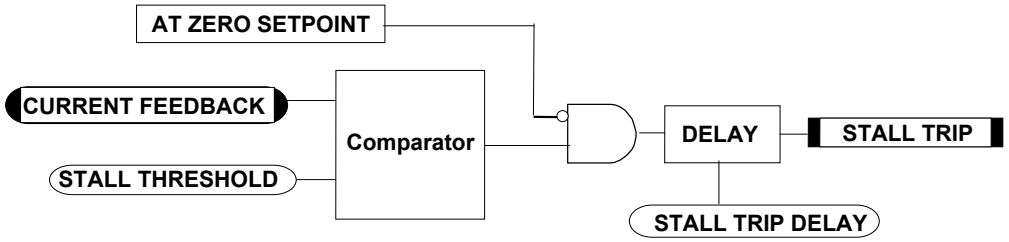

SPDFBK ALM LEVEL	**180**	**0.0 to 100.0 % (h)**
The speed feedback alarm compares speed feedback to armature voltage. The alarm level is the threshold which the difference between the two signals should exceed for the alarm to activate.		
THERMISTOR STATE	**337**	**FALSE / TRUE**
TRUE if the thermistor input is active, FALSE otherwise.		
SPEED FBK STATE	**472**	**FALSE / TRUE**
A Boolean output that shows the state of the speed feedback alarm. This output is updated even when the alarm is disabled.		
HEALTH LED	**122**	**FALSE / TRUE**
State of Health LED on Keypad.		
HEALTH WORD	**115**	**0x0000 to 0xFFFF**
The hexadecimal sum of any alarms present. Refer to Chapter 7: “Trips and Fault Finding” - Alarm Messages.		
HEALTH STORE	**116**	**0x0000 to 0xFFFF**
The hexadecimal value of the first (or only) alarm. Refer to Chapter 7: “Trips and Fault Finding” - Alarm Messages.		
REMOTE TRIP	**542**	**FALSE / TRUE**
The state of Remote Trip.		
STALL TRIP	**112**	**FALSE / TRUE**
Armature current is above STALL THRESHOLD and AT ZERO SPEED but not AT ZERO SETPOINT.		

ALARMS

Parameter	Tag	Range
LAST ALARM	**528**	**0x0000 to 0xFFFF**

The hexadecimal value of the last (or only) alarm. Refer to Chapter 7: “Trips and Fault Finding” - Alarm Messages.

0x0000 : NO ACTIVE ALARMS
0x0001 : OVER SPEED
0x0002 : MISSING PULSE
0x0004 : FIELD OVER I
0x0008 : HEATSINK TRIP
0x0010 : THERMISTOR
0x0020 : OVER VOLTS (VA)
0x0040 : SPD FEEDBACK
0x0080 : ENCODER FAILED
0x0100 : FIELD FAILED
0x0200 : 3 PHASE FAILED
0x0400 : PHASE LOCK
0x0800 : 5703 RCV ERROR
0x1000 : STALL TRIP
0x2000 : OVER I TRIP
0x8000 : ACCTS FAILED
0xF001 : AUTOTUNE ERROR
0xF002 : AUTOTUNE ABORTED
0xF003 : SEQ PRE READY
0xF004 : CONTACTOR DELAY
0xF005 : EXTERNAL TRIP
0xF006 : REMOTE TRIP
0xF007 : ENABLE LOW
0xF009 : SEQUENCING
0xF010 : COMMS TIMEOUT
0xF200 : CONFIG ENABLED
0xF300 : CALIBRATION
0xF400 : NO OP-STATION
0xFF03 : AUX SUPPLY
0xFF05 : PCB VERSION
0xFF06 : PRODUCT CODE

Functional Description

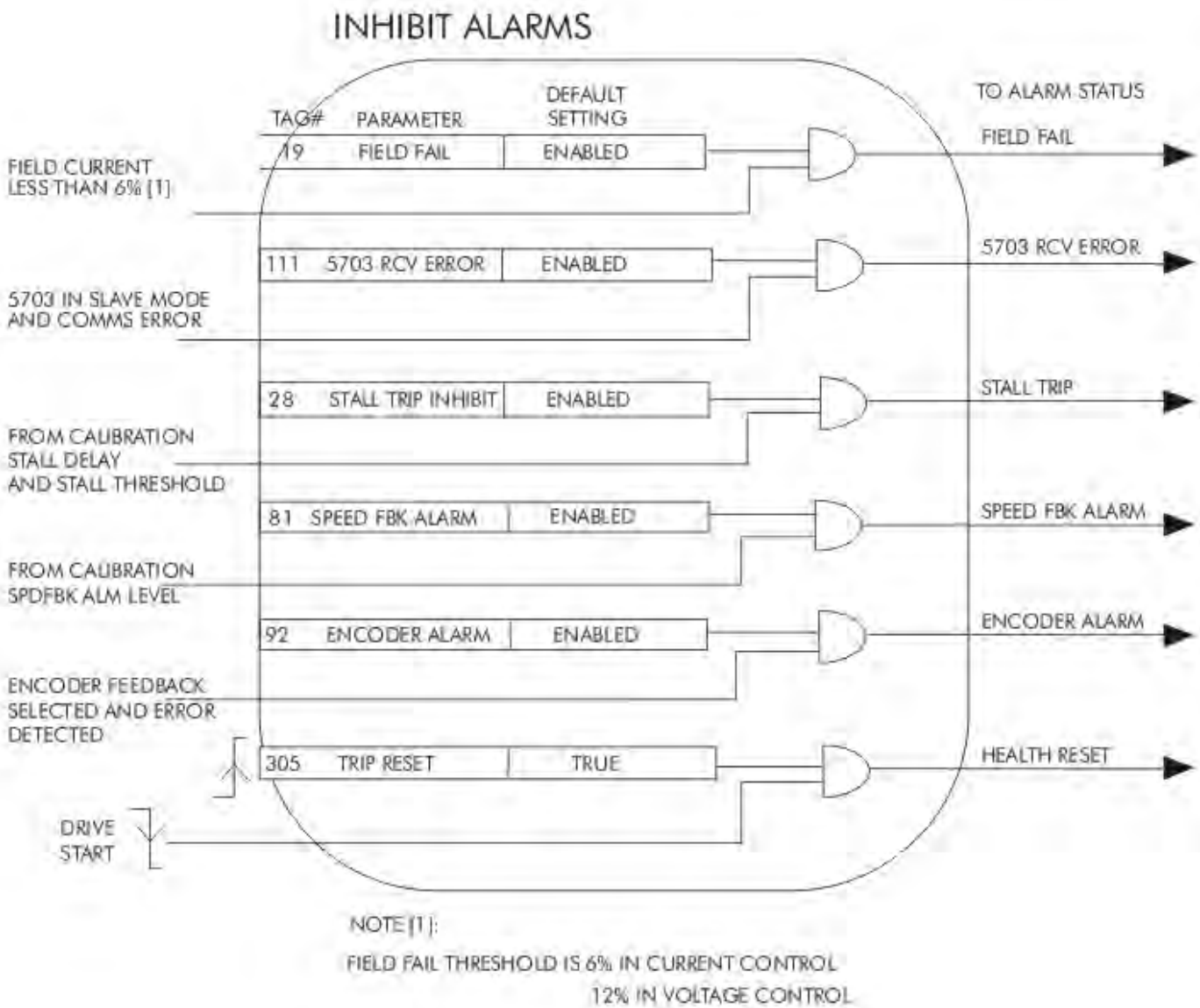

ANALOG INPUTS

The analog input block is used to scale and clamp the inputs for terminals A2 to A6.

MMI Menu Map

1 SYSTEM
2 CONFIGURE I/O
3 ANALOG INPUTS
4 ANIN 1 (A2)
4 ANIN 2 (A3)
4 ANIN 3 (A4)
4 ANIN 4 (A5)
4 ANIN 5 (A6)
- CALIBRATION
- MAX VALUE
- MIN VALUE
- DESTINATION

FUNCTION BLOCKS\INPUTS & OUTPUTS\ANALOG INPUT\ANALOG INPUT 1

		OUTPUT [674]	0.00 %
1.0000	[230]	CALIBRATION	
100.00 %	[231]	MAX VALUE	
-100.00 %	[232]	MIN VALUE	
		ANIN 1 (A2) [50]	0.00 VOLTS

FUNCTION BLOCKS\INPUTS & OUTPUTS\ANALOG INPUT\ANALOG INPUT 2

		OUTPUT [493]	0.00 %
1.0000	[233]	CALIBRATION	
100.00 %	[234]	MAX VALUE	
-100.00 %	[235]	MIN VALUE	
		ANIN 2 (A3) [51]	0.00 VOLTS

FUNCTION BLOCKS\INPUTS & OUTPUTS\ANALOG INPUT\ANALOG INPUT 3

		OUTPUT [675]	0.00 %
1.0000	[236]	CALIBRATION	
100.00 %	[237]	MAX VALUE	
-100.00 %	[238]	MIN VALUE	
		ANIN 3 (A4) [52]	0.00 VOLTS

FUNCTION BLOCKS\INPUTS & OUTPUTS\ANALOG INPUT\ANALOG INPUT 4

		OUTPUT [676]	0.00 %
1.0000	[239]	CALIBRATION	
200.00 %	[240]	MAX VALUE	
-200.00 %	[241]	MIN VALUE	
		ANIN 4 (A5) [53]	0.00 VOLTS

FUNCTION BLOCKS\INPUTS & OUTPUTS\ANALOG INPUT\ANALOG INPUT 5

		OUTPUT [677]	0.00 %
1.0000	[242]	CALIBRATION	
200.00 %	[243]	MAX VALUE	
-200.00 %	[244]	MIN VALUE	
		ANIN 5 (A6) [54]	0.00 VOLTS

NOTE **Terminal ANIN 2 (A3) is permanently connected to SETPOINT 2 (A3) in the SPEED LOOP function block and to the Current Demand via I DEMAND ISOLATE (the current demand isolate switch) in the CURRENT LOOP function block.**

To avoid interference with other drive functions when not required: the parameter RATIO 2 (A3) (Tag 7 in the SPEED LOOP function block) must be set to zero; and the I DMD. ISOLATE parameter (Tag 119 in the CURRENT LOOP function block) must be set to DISABLED, i.e. selecting the Speed Loop as shown in the Main Block Diagram.

Because ANIN 2 (A3) is scanned synchronously with the current loop (typically every 3.3/2.6ms, 50/60Hz), it should be used for any signal whose response is critical e.g. a trim input from an external positioning system or load share.

Configurable Analog Inputs

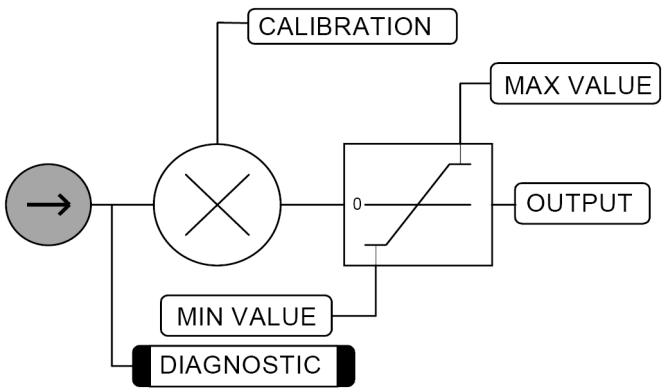

ANALOG INPUTS

Parameter	Tag	Range
CALIBRATION	**230, 233, 236, 239, 242**	**-3.0000 to 3.0000**
The analog input scaling ratio. For a value of 1.0, 10V = 100%.		
MAX VALUE	**231, 234, 237, 240, 243**	**-300.00 to 300.00 %**
The maximum value of the scaled analog input.		
MIN VALUE	**232, 235, 238, 241, 244**	**-300.00 to 300.00 %**
The minimum value of the scaled analog input.		
OUTPUT	**674, 493, 675, 676, 677**	**— .xx %**
These parameters is the output diagnostic ANALOG INPUT 1 to ANALOG INPUT 5. Note by default 10V = 100%. To obtain a different range, adjust the CALIBRATION, MAX VALUE and MIN VALUE parameters.		
ANIN 1 (A2) to ANIN 5 (A6)	**50, 51, 52, 53, 54**	**—.xx VOLTS**
Actual volts measured on the analog input.		

ANALOG OUTPUTS

MMI Menu Map

1 SYSTEM
2 CONFIGURE I/O
3 ANALOG OUTPUTS
4 ANOUT 1 (A7)
4 ANOUT 2 (A8)
- % TO GET 10V
- MODULUS
- OFFSET
- SOURCE TAG

This function block converts the demand percentage into 0-10V, suitable for driving the analog output electronics of the drive.

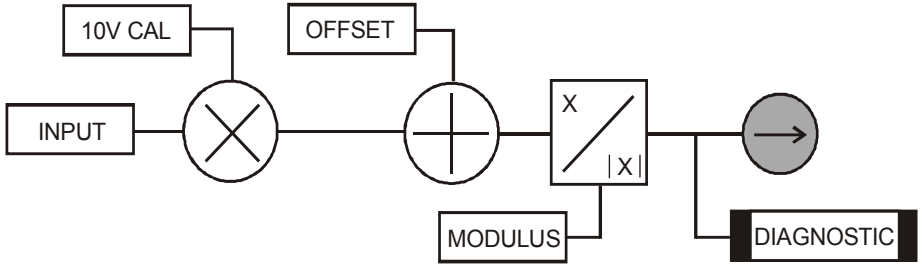

FUNCTION BLOCKS\INPUTS & OUTPUTS\ANALOG OUTPUT\ANALOG OUTPUT 1

0.00 %	[678] INPUT	
100.00 %	[245] 10V CAL	
0.00 %	[464] OFFSET	
FALSE	[362] MODULUS	
	ANOUT 1 (A7) [55]	0.0 V

FUNCTION BLOCKS\INPUTS & OUTPUTS\ANALOG OUTPUT\ANALOG OUTPUT 2

0.00 %	[679] INPUT	
100.00 %	[248] 10V CAL	
0.00 %	[465] OFFSET	
FALSE	[363] MODULUS	
	ANOUT 2 (A8) [56]	0.0 V

ANALOG OUTPUTS

Parameter	Tag	Range
INPUT	**678, 679**	**-300.00 to 300.00 %**
Analog output value as a percentage of range.		
10V CAL	**245, 248**	**-300.00 to 300.00 %**
(% TO GET 10V)		
Scaler value which produces 10V output. Set 10V CAL to be 50% to get ±10V out for ±50% in.		
OFFSET	**464, 465**	**-100.00 to 100.00 %**
Offset value added to the normal output value after the scaler and before the modulus.		
MODULUS	**362, 363**	**FALSE / TRUE**
Unipolar analog output enable. If TRUE, then -10% gives +1V out.		
ANOUT 1 (A7) to ANOUT 2 (A8)	**55, 56**	**—.xx V (h)**
Actual voltage output to the terminal.		

AUTOTUNE

MMI Menu Map

1 SETUP PARAMETERS
2 CURRENT LOOP
AUTOTUNE

MMI Menu Map

1 FUNCTION BLOCKS
2 MOTOR CONTROL
3 AUTOTUNE
STATE
METHOD
ERROR TYPE

The Autotune feature is used to correctly set up the current loop controller parameters for the motor load.

FUNCTION BLOCKS\MOTOR CONTROL\AUTOTUNE

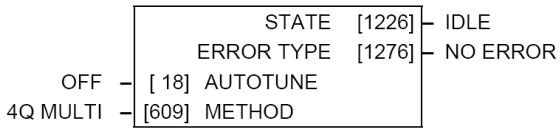

The process consists of the drive generating a series of current pulses in the armature in order to determine:

1. The optimal proportional term and integral terms gains in the current controller, and storing these values as PROP. GAIN and INT. GAIN.
2. The average value at which the normal running pulses would just join up (stop being discontinuous), and storing this value as the DISCONTINUOUS parameter.

The Autotune is by default performed with the motor field off, and so the final proportional term gain is reduced by 30% to allow for some armature inductance fall-off when the field is re-applied.

Refer to Chapter 4: Performance Adjustment for details of how to perform an Autotune.

AUTOTUNE

Parameter	Tag	Range
AUTOTUNE	**18**	**OFF / ARMATURE / FIELD**
Turns the AUTOTUNE procedure on, and selects if field or armature tuning is required. Refer to Chapter 4: Performance Adjustment.		
STATE	**1226**	**See below**
Indicates the current operating state of the Autotune function block. The FAILED state indicates failure or abort of the Autotune process (for causes refer to Chapter 4: Performance Adjustment). 0 : IDLE 1 : RUNNING 2 : SUCCESS 3 : FAILED		
METHOD	**609**	**See below**
Controls the method of operation of the Autotune process. • The default method 4QMULTI uses both thyristor bridges to generate balanced forward and reverse armature current pulses. • The 2QMULTI method only uses the forward thyristor bridge. Note that the 2Q MULTI method is always used on a 2Q drive (591) irrespective of the setting of this parameter. 0 : 4Q MULTI 1 : 2Q MULTI		

AUTOTUNE

Parameter	Tag	Range
ERROR TYPE	**1276**	**See below**

Indicates the cause of an autotune error condition.

0 : NO ERROR
1 : OVER SPEED
2 : FIELD ERROR
3 : PULSE WIDTH
4 : OVER CURRENT
5 : TIMEOUT
6 : AUTOTUNE ABORTED
7 : FIRING ANGLE
8 : PEAK/AVER. RATIO
9 : UNBALANCED BRID.
10 : NULL AVERAGE CUR
11 : THYRISTOR OFF (missing pulse)

AUX I/O

MMI Menu Map

1 SETUP PARAMETERS

2 AUX I/O

- AUX DIGOUT 1
- AUX DIGOUT 2
- AUX DIGOUT 3
- ANOUT 1
- ANOUT 2

The auxiliary I/O parameters are primarily intended to extend the functionality of the serial links by allowing them access to the drive analog and digital terminals.

FUNCTION BLOCKS\INPUTS & OUTPUTS\AUX I/O

FALSE	[94]	AUX DIGOUT 1
FALSE	[95]	AUX DIGOUT 2
FALSE	[96]	AUX DIGOUT 3
0.00 %	[128]	ANOUT 1
0.00 %	[129]	ANOUT 2

AUX I/O

Parameter	Tag	Range
AUX DIGOUT 1	**94**	**FALSE / TRUE**
Software digital output 1. For example, to directly drive the configurable digital output DIGOUT1, connect the Source of DIGOUT1 to this parameter, Tag 94.		
AUX DIGOUT 2	**95**	**FALSE / TRUE**
Software digital output 2. For example, to directly drive the configurable digital output DIGOUT2, connect the Source of DIGOUT2 to this parameter, Tag 95.		
AUX DIGOUT 3	**96**	**FALSE / TRUE**
Software digital output 3. For example, to directly drive the configurable digital output DIGOUT3, connect the Source of DIGOUT3 to this parameter, Tag 96.		
ANOUT 1	**128**	**-100.00 to 100.00 %**
Software analog output 1. For example, to directly drive the configurable analog output ANOUT1, connect the Source of ANOUT1 to this parameter, Tag 128. ANOUT 1 can also be used as a general "staging post" for connecting inputs to outputs. For example, connect Analog Input 1 (A2) directly to Analog Output 1 (A7)		
ANOUT 2	**129**	**-100.00 to 100.00 %**
Software analog output 2. For example, to directly drive the configurable analog output ANOUT2, connect the Source of ANOUT2 to this parameter, Tag 129. ANOUT 2 can also be used as a general "staging post" for connecting inputs to outputs. For example, connect Analog Input 1 (A2) directly to Analog Output 2 (A8)		

CALIBRATION

MMI Menu Map

1 SETUP PARAMETERS
2 CALIBRATION
- ARMATURE V CAL.
- IR COMPENSATION
- ANALOG TACH CAL
- ZERO SPD. OFFSET
- ARMATURE I (A9)
- FIELD I CAL.

MMI Menu Map

1 DIAGNOSTICS
- TERMINAL VOLTS
- BACK EMF
- UNFIL. TACH INPUT

This function block contains motor-specific parameters.

When CONFIGURE ENABLE = TRUE, the operation of the Block Diagram is suspended and all Keypad LEDs will flash.

FUNCTION BLOCKS\MOTOR CONTROL\CALIBRATION

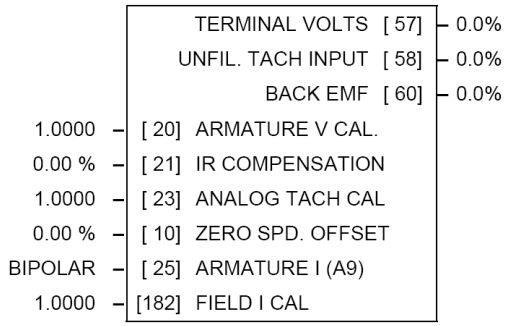

CALIBRATION

Parameter	Tag	Range
ARMATURE V CAL.	**20**	**0.9800 to 1.1000**
Trim adjustment of the motor armature volts to give exactly 100% at the required actual voltage value (e.g. 460V etc.). Note: - Primary voltage calibration is achieved by adjusting the NOM MOTOR VOLTS parameter (CONFIGURE DRIVE function block).		
IR COMPENSATION	**21**	**0.00 to 100.00 %**
Compensation for motor IR drop to improve regulation when using armature voltage feedback as the speed feedback. This is also used in field weakening applications to improve dynamic response and speed holding stability, refer to "Initial Start-up Routine" in Chapter 4, Item 16.		
ANALOG TACH CAL	**23**	**0.9800 to 1.1000**
Trim adjustment of the motor speed to give exactly 100% at the required actual speed value (e.g. 1500 RPM etc). *Note: Primary tacho calibration is achieved by adjusting SW1 - 3 on the tacho calibration board.*		
ZERO SPD. OFFSET	**10**	**-5.00 to 5.00 %**
If the speed feedback is not zero when the motor is stationary (possibly due to hardware offsets etc.) the setting of this parameter to the value of the offset will result in a zero reading from the speed feedback.		
ARMATURE I (A9)	**25**	**UNIPOLAR / BIPOLAR**
Selects operation of the current meter output (terminal A9), either bipolar or unipolar. Bipolar mode : +10V = 200% output current forward, -10V = 200% output current reverse Unipolar mode : +10V = 200% output current		
FIELD I CAL.	**182**	**0.9800 to 1.1000**
Trim adjustment of the motor field current to give exactly 100% at the required actual current value (e.g. 1.5A etc.). Note:- Primary field calibration is achieved by adjusting the FIELD CURRENT parameter (CONFIGURE DRIVE function block).		

CALIBRATION

Parameter	Tag	Range
TERMINAL VOLTS	**57**	**—.x % (h)**
Refer to Chapter 6: "The Keypad" - The Keypad Menus (DIAGNOSTICS).		
UNFIL. TACH INPUT	**58**	**—.x % (h)**
Refer to Chapter 6: "The Keypad" - The Keypad Menus (DIAGNOSTICS).		
BACK EMF	**60**	**—.x % (h)**
Refer to Chapter 6: "The Keypad" - The Keypad Menus (DIAGNOSTICS).		

Functional Description

CALIBRATION

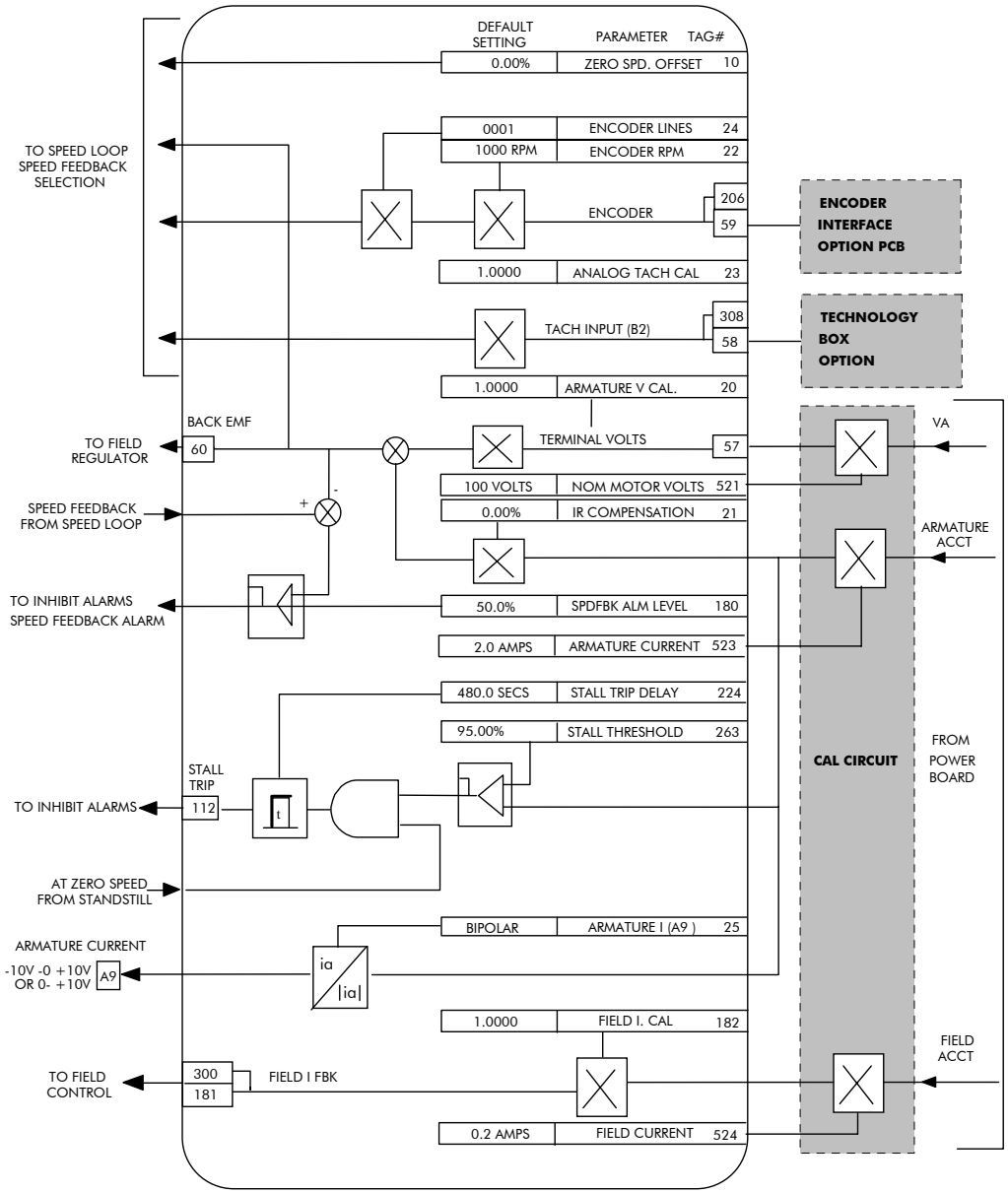

COMMS PORT

MMI Menu Map

1 SETUP PARAMETERS
2 SERIAL LINKS
3 SYSTEM PORT (P3)
- MODE
- GROUP ID (UID)
- UNIT ID (UID)
- ERROR REPORT
- BAUD RATE

Use this block to configure the drive's P3 port.

Refer to Appendix A: "Serial Communications" - System Port P3 for further information.

The P3 port is a non-isolated serial communications port built in to the drive's Control Board.

It is used off-line (while the drive is stopped) for transferring and saving drive configuration files using a personal computer (PC) running a serial communications program, or on-line (while the drive is running) when using the Parker SSD Drives 5703 Setpoint Repeater Unit.

You can also use the P3 port to transfer configuration files by connecting to a PC running the Windows ™ compatible software package "ConfigEd Lite". Refer to the ConfigEd Lite manual RG352747.

FUNCTION BLOCKS\COMMUNICATIONS\COMMS PORT\COMMS PORT 3

EIASCII	–	[130]	MODE
19200	–	[198]	BAUD RATE
0	–	[329]	GROUP ID (GID)
0	–	[330]	UNIT ID (UID)
TRUE	–	[328]	ESP SUP. (ASCII)
0.00 %	–	[331]	CHANGEBAND (BIN)
0xFFFF	–	[333]	PNO.7
0x00C0	–	[332]	ERROR REPORT
2 ms	–	[1175]	REPLY DELAY

MMI Menu Map

1 FUNCTION BLOCKS
2 COMMUNICATIONS
3 COMMS PORT
4 COMMS PORT 3
- MODE
- BAUD RATE
- GROUP ID (GID)
- UNIT ID (UID)
- ESP SUP. (ASCII)
- CHANGEBAND (BIN)
- PNO.7
- ERROR REPORT
- REPLY DELAY

COMMS PORT

Parameter	Tag	Range
MODE Used the set the protocol on this port. 0 : DISABLED 1 : 5703 MASTER 2 : 5703 SLAVE 3 : EIASCII 4 : EIBINARY	**130**	**See below**
BAUD RATE Transmission rate. Options available are: 0 : 300 1 : 600 2 : 1200 3 : 2400 4 : 4800 5 : 9600 (default) 6 : 19200 7 : 38400 8 : 57600 9 : 115200	**198**	**See below**
GROUP ID (GID) The Parker SSD Drives protocol group identity address.	**329**	**0 to 7**

COMMS PORT

Parameter	Tag	Range
UNIT ID (UID)	**330**	**0 to 255**
The Parker SSD Drives protocol unit identity address.		
ESP SUP. (ASCII)	**328**	**FALSE/TRUE**
Reserved for future use.		
CHANGEBAND (BIN)	**331**	**0.00 to 100.00 %**
Reserved for future use.		
PNO.7	**333**	**0x0000 to 0xFFFF**
Reserved for future use.		
ERROR REPORT	**332**	**0x0000 to 0xFFFF**
Displays the last error as a hexadecimal code. Writing any value to this parameter will set the value to >00C0 (No Error). Refer to Appendix A: "Serial Communications" - Reference for a list of codes.		
DELAY	**1175**	**0 to 255 ms**
A programmable delay inserted by the drive before replying to a request.		

CONFIGURE DRIVE

This block contains many of the parameters required for configuring the drive.

NOTE **The CONFIGURE DRIVE menu on the MMI contains a different set of parameters, for set-up using the keypad.**

CONFIGURE ENABLE: The operation of the Block Diagram is suspended and all Keypad LEDs will flash whilst CONFIGURE ENABLE = TRUE.

NOTE **The CONFIGURE ENABLE parameter is also available in the following MMI menus for ease of use: CALIBRATION, CONFIGURE I/O**

MMI Menu Map

1 CONFIGURE DRIVE
- CONFIGURE ENABLE
- NOM MOTOR VOLTS
- ARMATURE CURRENT
- FIELD CURRENT

MMI Menu Map

1 SERIAL LINKS

2 SYSTEM PORT (P3)
- DUMP CHANGED

MMI Menu Map

1 FUNCTION BLOCKS

2 MISCELLANEOUS

3 CONFIGURE DRIVE
- AUTOMATIC SAVE
- UDP USE OP PORT
- EMULATE 590P
- DEBOUNCE DIGIN

FUNCTION BLOCKS\MISCELLANOUS\CONFIGURE DRIVE

DISABLED	–	[39]	CONFIGURE ENABLE
100 V	–	[521]	NOM MOTOR VOLTS
1.0 A	–	[523]	ARMATURE CURRENT
0.2 A	–	[524]	FIELD CURRENT
FALSE	–	[1220]	AUTOMATIC SAVE
FALSE	–	[1169]	DUMP CHANGED
FALSE	–	[628]	UDP USE OP PORT
0x0001	–	[162]	EMULATE 590P
TRUE	–	[1172]	DEBOUNCE DIGIN

CONFIGURE DRIVE

Parameter	Tag	Range
CONFIGURE ENABLE	**39**	**FALSE / TRUE**
Selects Operating Mode (FALSE) or Configuration Mode (TRUE). Refer to “Modifying a Block Diagram”, page D-1.		
NOM MOTOR VOLTS	**521**	**100 to 875 VOLTS**
Sets the 100% value for Armature Volts VA. Set this value to match the motor in use. (Refer to ARMATURE V CAL in the CALIBRATION function block).		
ARMATURE CURRENT	**523**	**Product code dependent AMPS**
Sets the 100% value for Armature Current IA. Set this value to match the motor in use.		
FIELD CURRENT	**524**	**Product code dependent AMPS**
Sets the 100% value for Field Current IF. Set this value to match the motor in use. Note: this should be set to a minimum value if in Field Voltage control - see FLD. CTRL MODE in the FIELD CONTROL function block.		
AUTOMATIC SAVE	**1220**	**FALSE/TRUE**
When TRUE, changes made to parameters using the operator station are automatically saved to the drive’s non-volatile memory.		
DUMP CHANGED	**1169**	**FALSE /TRUE**
This parameter is used in conjunction with DUMP MMI (TX) and DUMP BLOCKS. When TRUE, only those parameters that have been modified from their default value are included in the dump.		
UDP USE OP PORT	**628**	**FALSE/TRUE**
When TRUE the UDP transfer will be re-directed to the operator station port.		
EMULATE 590P	**162**	**0x0000 to 0xFFFF**
When non-zero the drive emulates some behaviour of earlier firmware versions of the 590P, (firmware versions 5.x and 7.x). This behaviour affects the time constants of the PID block and the linking of parameters in the function block diagram (refer to "Compatibility with Earlier Versions of Firmware". page D-7).		
DEBOUNCE DIGIN	**1172**	**FALSE/TRUE**
When TRUE the drive adds a 3ms debounce filter to the digital inputs. This affects terminals C3 to C8, B8 and B9. The hardware connection between terminal B9, (COAST STOP) and the control of the external contactor is not affected.		

CURRENT LOOP

Use this to setup the drive's conventional current/torque loop.

It takes the current demand, imposes limits through four clamps, and then uses a PI loop to control the output.

The four separate clamps - current profile, inverse time overload, bipolar clamps and main current clamp - the clamps are in series and lowest clamp takes effect. The resultant clamp value can be seen in the diagnostics ACTUAL POS I LIM and ACTUAL NEG I LIM.

The internal inputs to this block are:

- the current demand from the speed loop or terminal A3 (selected via I DMD. ISOLATE)
- the current limit clamps from CURRENT PROFILE and INVERSE TIME (note that the bipolar clamps and main current clamp are resident in the CURRENT LOOP block)
- current feedback from CALIBRATION.

The default configuration uses DIGIN 1 and DIGIN 3 for switching modes (BIPOLAR CLAMPS and I DMD. ISOLATE respectively), ANIN 5 for setting the symmetrical positive and negative current clamps.

MMI Menu Map

1 SETUP PARAMETERS
2 CURRENT LOOP
- MAIN CURR. LIMIT
- PROP. GAIN
- INT. GAIN
- DISCONTINUOUS
- ADDITIONAL DEM
- BIPOLAR CLAMPS
- REGEN ENABLE
- MASTER BRIDGE
- POS. I CLAMP IN
- NEG. I CLAMP IN
- I DMD. ISOLATE
- CUR. LIMIT/SCALER

MMI Menu Map

1 DIAGNOSTICS
- CURRENT DEMAND
- CURRENT FBK. AMPS
- IaFbk UNFILTERED
- IaDmd UNFILTERED
- POS. I CLAMP
- NEG. I CLAMP
- ACTUAL POS I LIM
- ACTUAL NEG I LIM
- AT CURRENT LIMIT
- BACK EMF

MMI Menu Map

1 FUNCTION BLOCKS
2 MOTOR CONTROL
3 CURRENT LOOP
- PHASE ANGLE @ E
- ISOL DMD SOURCE

FUNCTION BLOCKS\MOTOR CONTROL\CURRENT LOOP

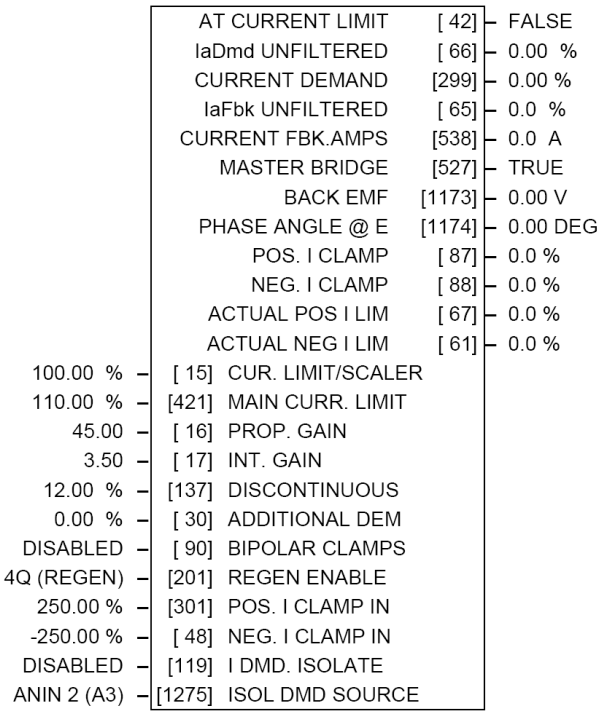

CURRENT LOOP

Parameter	Tag	Range
CUR. LIMIT/SCALER	**15**	**0.00 to 200.00 %**
Current limit scaler. It scales bipolar/unipolar clamps. To achieve 200% current limit, the current limit scaler should be set to 200%.		
MAIN CURR. LIMIT	**421**	**0.00 to 200.00 %**
Independent symmetric current clamp. Sets symmetric clamps outside scaling from the CUR. LIMIT/SCALER parameter.		
PROP GAIN	**16**	**0.00 to 200.00**
Proportional gain control for armature current PI loop. This parameter is set during the autotune function.		
INT. GAIN	**17**	**0.00 to 200.00**
Integral gain control for armature current PI loop, set during the autotune function.		

CURRENT LOOP

Parameter	Tag	Range
DISCONTINUOUS	**137**	**0.00 to 200.00 %**
Sets the boundary current between the discontinuous and continuous regions of operation. This is set during the autotune function and affects the performance of the adaptive algorithm.		
ADDITIONAL DEM	**30**	**-200.00 to 200.00 %**
Additional current demand input.		
BIPOLAR CLAMPS	**90**	**DISABLED / ENABLED**
Selects between bipolar (asymmetric) or unipolar (symmetric) current clamps for the 4 quadrants of operation. Default setting of DISABLED means UNIPOLAR clamps selected. DISABLED - unipolar (symmetric) ENABLED - bipolar (asymmetric) With BIPOLAR CLAMPS disabled, the clamps are symmetrical and are set by POS. I CLAMP IN. With BIPOLAR CLAMPS enabled, the clamps are assymmetrical, bipolar. In bipolar mode, POS. I CLAMP IN sets the maximum positive current and NEG. I CLAMP IN sets the maximum negative current. Both clamps can be positive or negative, however, the POS I CLAMP IN value is internally prevented from going numerically below the NEG I CLAMP IN. CUR. LIMIT/SCALER scales both POS. I CLAMP IN and NEG. I CLAMP IN.		
REGEN ENABLE	**201**	**See below**
When REGEN ENABLE is 2Q (NON-REGEN), negative current demands are clamped to zero. Current feedback is subtracted from the current demand and the result is controlled by the PI loop. The result provides SCR phase angle control. 2Q (NON-REGEN) - non-regenerative (2-quadrant) 4Q (REGEN) - regenerative (4-quadrant)		
POS. I CLAMP IN	**301**	**-200.00 to 200.00 %**
Positive current clamp when BIPOLAR CLAMPS is ENABLED.		
NEG. I CLAMP IN	**48**	**-200.00 to 200.00 %**
Negative current clamp when BIPOLAR CLAMPS is ENABLED. *Note on bipolar current clamps: these clamps in bipolar mode can cross-over onto the same quadrant. The POS. I CLAMP IN value is internally prevented from going numerically below the NEG. I CLAMP IN.*		

CURRENT LOOP

Parameter	Tag	Range
I DMD. ISOLATE	**119**	**DISABLED / ENABLED**

Speed loop bypass; the current demand is taken from ANIN 2 (A3).

With I DMD. ISOLATE disabled, the current loop uses the current demand from the speed loop. With I DMD. ISOLATE enabled, ANALOG I/P 2, terminal A3, supplies the current demand. With default scaling, 10V dc on terminal A3 is 100% current demand. An additional current input, ADDITIONAL DEM, can be added to the current demand. The simplified diagram below, with reference to the default Block Diagram, shows how the I DMD ISOLATE parameter selects the controlling loop.

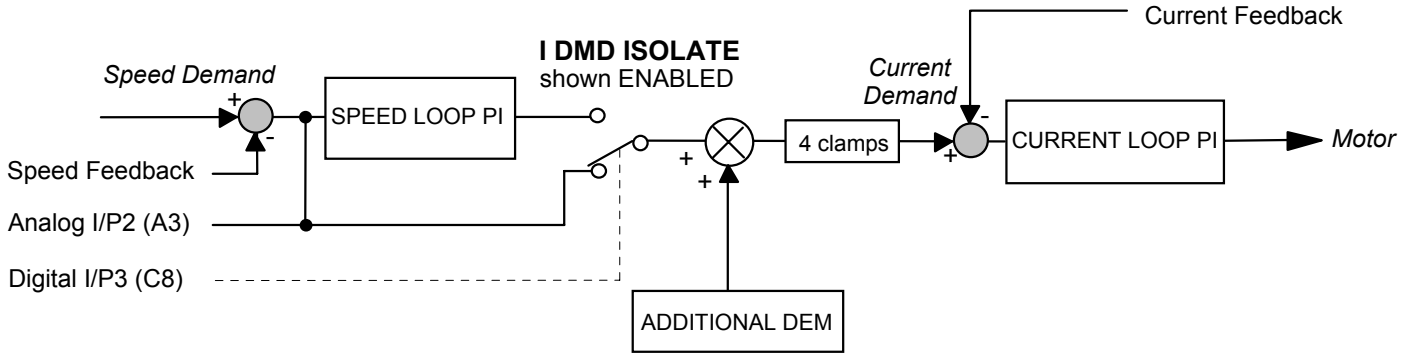

AT CURRENT LIMIT	**42**	**FALSE / TRUE**

Refer to Chapter 6: "The Keypad" - The Keypad Menus (DIAGNOSTICS).

IaDmd UNFILTERED	**66**	**—.x % (h)**

Refer to Chapter 6: "The Keypad" - The Keypad Menus (DIAGNOSTICS).

CURRENT DEMAND	**299**	**—.xx %**

Refer to Chapter 6: "The Keypad" - The Keypad Menus (DIAGNOSTICS).

IaFbk UNFILTERED	**65**	**—.x % (h)**

Refer to Chapter 6: "The Keypad" - The Keypad Menus (DIAGNOSTICS).

CURRENT FBK. AMPS	**538**	**—.x AMPS**

Refer to Chapter 6: "The Keypad" - The Keypad Menus (DIAGNOSTICS).

MASTER BRIDGE	**527**	**FALSE/TRUE**

A diagnostic indicating currently active bridge; master = TRUE, slave = FALSE.

BACK EMF	**1173**	**—.x V**

Refer to Chapter 6: "The Keypad" - The Keypad Menus (DIAGNOSTICS).

PHASE ANGLE @ E	**1174**	**—.x DEG**

The motor back EMF, presented as the angle at which the supply volts matches it. This is the instantaneous angle above which firing the thyristor would just start to make armature current.

CURRENT LOOP

Parameter	Tag	Range
POS. I CLAMP	**87**	**—.x %**
Refer to Chapter 6: "The Keypad" - The Keypad Menus (DIAGNOSTICS).		
NEG. I CLAMP	**88**	**—.x %**
Refer to Chapter 6: "The Keypad" - The Keypad Menus (DIAGNOSTICS).		
ACTUAL POS I LIM	**67**	**—.x %**
Refer to Chapter 6: "The Keypad" - The Keypad Menus (DIAGNOSTICS).		
ACTUAL NEG I LIM	**61**	**—.x %**
Refer to Chapter 6: "The Keypad" - The Keypad Menus (DIAGNOSTICS).		
ISOL DMD SOURCE	**1275**	**ANIN 2 (A3) / FIELD I DEMAND**

Selects the source of the isolated current demand.

- Setting ANIN 2 (A3) makes use of the A3 analogue input terminal as the current demand.
- Setting FIELD I DEMAND makes use of the current demand (%) at the field current controller, as the percentage armature current demand.

The use of this parameter is typically combined with parameters BEMF SOURCE, BEMF INPUT and 3-PHASE FIELD to apply the drive to field weakening control of a motor field.

Functional Description

Note 1: I DMD. ISOLATE removes speed loop demand and selects analog I/P 2 as current regulator demand.
I DMD. ISOLATE is overridden by program stop and stop to return drive to speed regulation.

Note 2: REGEN ENABLE = 2Q (NON-REGEN) prevents negative current demand. Non-regenerative drives use non-regen mode irrespective of the REGEN ENABLE parameter setting.

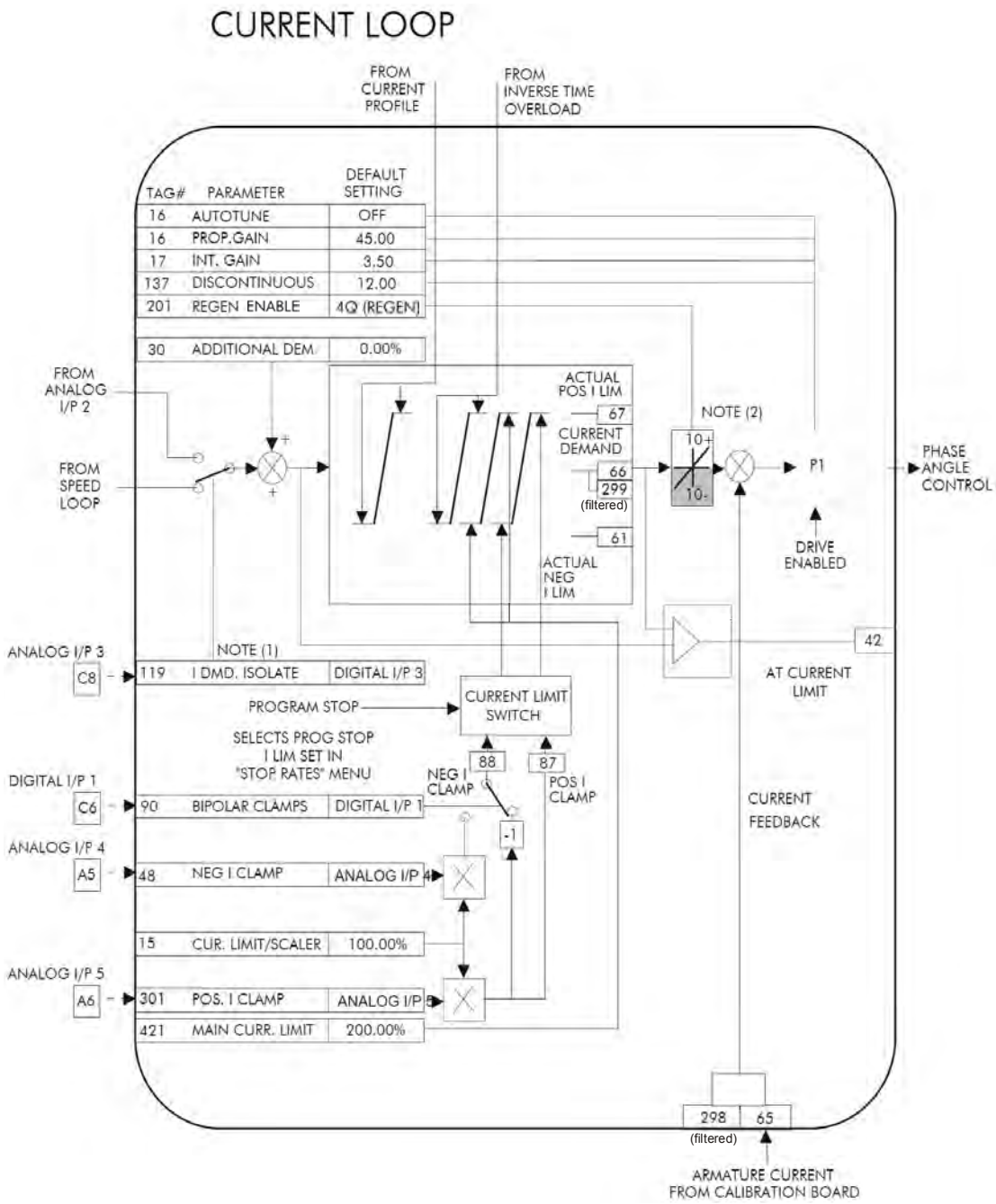

CURRENT PROFILE

MMI Menu Map

1 SETUP PARAMETERS

2 CURRENT PROFILE
- SPD BRK1 (LOW)
- SPD BRK2 (HIGH)
- IMAX BRK1(SPD1)
- IMAX BRK2(SPD2)

Use this to clamp the current limit for applications where motors have a reduced ability to commutate armature current at low field currents.

Normally this is required when using Field Weakening, although some motors exhibit commutation limitations at higher speeds even with rated field current.

The input to the block is SPEED FEEDBACK from the SPEED LOOP function block. The output of the block changes the current limit clamp in the current loop.

- When SPEED FEEDBACK exceeds SPD BRK 1 (LOW), the current profile begins scaling the current limit as set by IMAX BRK 1 (SPD1).
- As the SPEED FEEDBACK increases toward SPD BRK2 (HIGH), the current limit is reduced linearly toward IMAX BRK2 (SPD2).
- When the speed exceeds SPD BRK2 (HIGH), the current limit remains at the IMAX BRK2 (SPD2) setting.

FUNCTION BLOCKS\MOTOR CONTROL\CURRENT PROFILE

100.0 %	[32]	SPD BRK 1 (LOW)
100.0 %	[31]	SPD BRK 2 (HIGH)
200.0 %	[93]	IMAX BRK 1 (SPD1)
200.0 %	[33]	IMAX BRK 2 (SPD2)

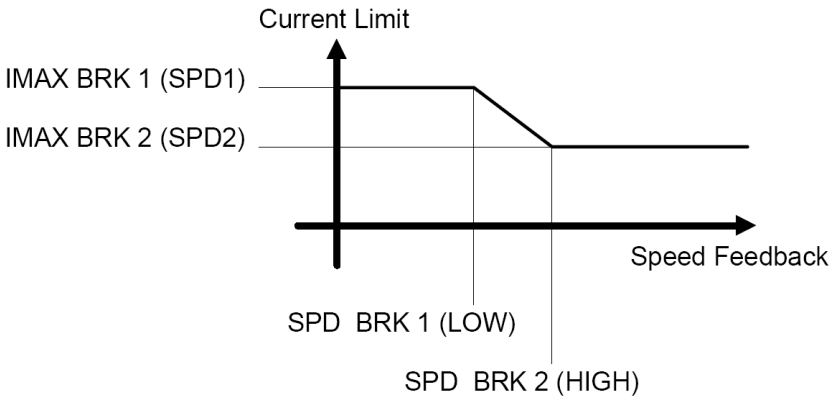

CURRENT PROFILE

Parameter	Tag	Range
SPD BRK 1 (LOW)	**32**	**0.0 to 100.0 % (h)**
This is the motor speed at which current limit profiling begins.		
SPD BRK 2 (HIGH)	**31**	**0.0 to 100.0 % (h)**
This is the upper speed limit at which current limit profiling ends.		
IMAX BRK 1 (SPD1)	**93**	**0.0 to 200.0 % (h)**
This sets the current limit value at or below speed break-point 1, provided the other current limit clamps (inverse time overload, bipolar clamps and main current clamps) are greater than this setting.		
IMAX BRK 2 (SPD2)	**33**	**0.0 to 200.0 % (h)**
This sets the current limit value at or above speed break-point 2, provided the other current limit clamps setting (inverse time overload, bipolar clamps and main current clamps) are greater than this.		

DEADBAND

MMI Menu Map

1 SETUP PARAMETERS
2 SETPOINT SUM 1
- DEADBAND WIDTH
- INPUT 1

MMI Menu Map

1 FUNCTION BLOCKS
2 SETPOINT FUNCS
3 DEADBAND
- OUTPUT

When the input is within the deadband, the output is clamped to zero to ignore any noise. The limits are symmetrical around zero. The limits are set by the DEADBAND parameter.

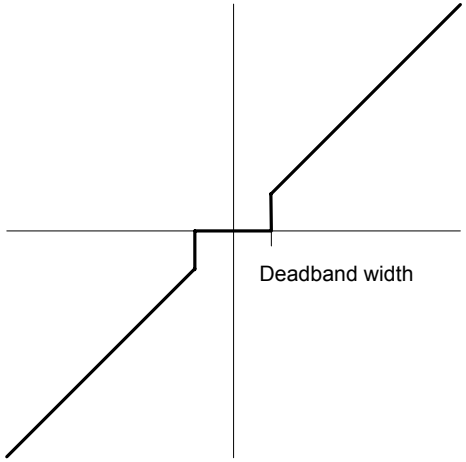

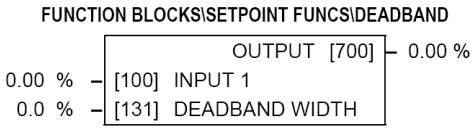

DEADBAND

Parameter	Tag	Range
INPUT 1	**100**	**-200.00 to 200.00 %**
Input 1 value. By default this is connected to Analog Input 1 (terminal A2).		
DEADBAND	**131**	**0.0 to 100.0 %**
Range within which the output is clamped at zero.		
OUTPUT	**700**	**—.xx %**
Modified value of input.		

DEMULTIPLEXER

MMI Menu Map

1 FUNCTION BLOCKS
2 MISCELLANEOUS
3 DEMULTIPLEXER
- INPUT
- OUTPUT 0
- OUTPUT 1
- OUTPUT 2
- OUTPUT 3
- OUTPUT 4
- OUTPUT 5
- OUTPUT 6
- OUTPUT 7
- OUTPUT 8
- OUTPUT 9
- OUTPUT 10
- OUTPUT 11
- OUTPUT 12
- OUTPUT 13
- OUTPUT 14
- OUTPUT 15

The demultiplexer function block splits the input word into 16 individual bits.

This may be used to extract the individual trip bits from the ACTIVE TRIPS parameter, for example.

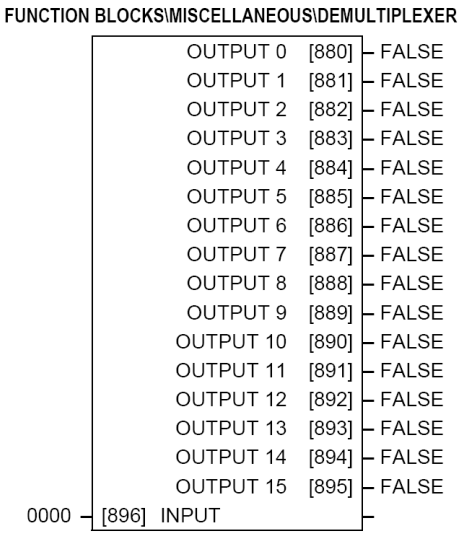

DEMULTIPLEXER

Parameter	Tag	Range
INPUT The input to be split into its component bits.	**896**	**0x0000 to 0xFFFF**
OUTPUT 0 to OUTPUT 15 Each output returns the corresponding bit of the 16 bit input word.	**880 to 895**	**FALSE / TRUE**

DIAMETER CALC.

MMI Menu Map

1 SETUP PARAMETERS
2 SPECIAL BLOCKS
3 DIAMETER CALC.
- LINE SPEED
- REEL SPEED
- MIN DIAMETER
- MIN SPEED
- RESET VALUE
- EXTERNAL RESET
- RAMP RATE
- DIAMETER
- MOD OF LINE SPD
- MOD OF REEL SPD
- UNFILT DIAMETER

This block performs three functions.

DIAMETER CALC: Used to calculate roll diameters in winder applications.

TAPER CALC: Used to profile the tension demand with diameter.

TENS+COMP CALC: Used to provide additional torque to compensate for static and dynamic friction, as well as load inertia.

These three functions are combined into one function block as they are functionally closely coupled.

DIAMETER CALC calculates the diameter of a reel as a function of the reel speed and the line speed. The resulting diameter is a percentage of the maximum full roll diameter. A lead section, adjacent line section, or surface driven speed sensing device is required to supply the line speed signal. The winder or unwind drive's motor speed feedback provides the reel speed input.

The ratio of the minimum core diameter to the maximum roll diameter determines the operating range of the diameter calculator. Set MIN DIAMETER to that ratio using the expression:

Minimum Core Outside Diameter ÷ Maximum Full Roll Diameter x 100%

The magnitude of LINE SPEED is compared with MIN SPEED to determine when the diameter calculator will operate:

- When LINE SPEED is above MIN SPEED the calculator is on
- When LINE SPEED is below MIN SPEED, DIAMETER is held at the last calculated diameter

When EXTERNAL RESET is ENABLED, RESET VALUE is used as the diameter output.

NOTE **In turret winder applications, LINE SPEED will usually be above MIN SPEED. During roll changes, EXTERNAL RESET must be held ENABLED for the new spindle until the web has been transferred and the diameter is calculated properly. RESET VALUE must be set to the appropriate new core value for a rewind, or new roll diameter for an unwind.**

MMI Menu Map

1 SETUP PARAMETERS
2 SPECIAL BLOCKS
3 TAPER CALC.
- TAPER
- TENSION SPT
- TAPERED DEMAND
- TENSION TRIM
- TOT. TENS. DEMAND

FUNCTION BLOCKS\WINDER\DIAMETER CALC.

		DIAMETER [427]	0.00 %
		MOD OF LINE SPD [428]	0.00 %
		MOD OF REEL SPD [429]	0.00 %
		UNFILT DIAMETER [430]	0.00 %
		TAPERED DEMAND [452]	0.00 %
		TOT. TENS. DEMAND [441]	0.00 %
		INERTIA COMP O/P [485]	0.00 %
		OUTPUT [706]	0.00 %
0.00 %	[424]	LINE SPEED	
0.00 %	[437]	REEL SPEED	
10.00 %	[425]	MIN DIAMETER	
5.00 %	[426]	MIN SPEED	
10.00 %	[462]	RESET VALUE	
FALSE	[463]	EXTERNAL RESET	
5.0 s	[453]	RAMP RATE	
0.00 %	[438]	TAPER	
0.00 %	[439]	TENSION SPT.	
0.00 %	[440]	TENSION TRIM	
0.00 %	[487]	STATIC COMP	
0.00 %	[488]	DYNAMIC COMP	
TRUE	[489]	REWIND	
0.00 %	[479]	FIX. INERTIA COMP	
0.00 %	[480]	VAR. INERTIA COMP	
100.00 %	[481]	ROLL WIDTH/MASS	
0.00 %	[498]	LINE SPEED SPT	
10	[482]	FILTER T.C.	
10.00	[483]	RATE CAL	
0.00 %	[484]	NORMALISED dv/dt	
1.0000	[486]	TENSION SCALER	

RAMP RATE adjusts the filtering of the diameter output. Its setting is the time it takes for a 100% change in DIAMETER. For example, at the default setting of 5.0 seconds, a 50% step change in diameter would take 2.5 seconds for the output diameter output to display the change.

MMI Menu Map

1 SETUP PARAMETERS

2 SPECIAL BLOCKS

3 TENS+COMP CALC.

- STATIC COMP
- DYNAMIC COMP
- REWIND
- FIX. INERTIA COMP
- VAR. INERTIA COMP
- ROLL WIDTH/MASS
- LINE SPEED SPT
- FILTER T.C.
- RATE CAL
- NORMALISED dv/dt
- INERTIA COMP O/P
- TENSION SCALER

MMI Menu Map

1 FUNCTION BLOCKS

2 WINDER

- OUTPUT

DIAMETER CALC.

Parameter	Tag	Range
LINE SPEED	**424**	**-105.00 to 105.00 %**
This will usually be configured to be the analog tacho input and scaled appropriately during calibration.		
REEL SPEED	**437**	**-105.00 to 105.00 %**
This will usually be configured to be the drive's own speed feedback, i.e. encoder or armature volts feedback.		
MIN DIAMETER	**425**	**0.00 to 100.00 %**
Set to the minimum core diameter (normally the empty core diameter) as a percentage of the maximum roll diameter.		
MIN SPEED	**426**	**0.00 to 100.00 %**
This is the minimum LINE SPEED level below which the diameter calculation is frozen.		
RESET VALUE	**462**	**0.00 to 100.00 %**
Normally for winders this will be set to the MIN DIAMETER value. It is the diameter preset used when changing rolls. This value will be preloaded into the ramp (filter) output when EXTERNAL RESET is enabled.		
EXTERNAL RESET	**463**	**DISABLED / ENABLED**
Sets and holds the diameter to the RESET VALUE when ENABLED.		
RAMP RATE	**453**	**0.1 to 600.0 s**
This is used to smooth the output of the diameter calculator.		
TAPER	**438**	**-100.00 to 100.00 %**
This defines the amount of tapering in the tension demand with diameter variation. When TAPER is positive, the tension demand is hyperbolically decreased as diameter increases.		
TENSION SPT.	**439**	**0.00 to 100.00 %**
This is the required tension setpoint.		
TENSION TRIM	**440**	**-100.00 to 100.00 %**
This is the additional tension demand in the form of a trim.		
STATIC COMP	**487**	**-300.00 to 300.00 %**
Static friction compensation set-up parameter.		
DYNAMIC COMP	**488**	**-300.00 to 300.00 %**
Dynamic friction compensation set-up parameter.		
REWIND	**489**	**DISABLED / ENABLED**
Switches the sign of the friction compensations when the motor changes direction. Set to DISABLED only when the winder reverses.		

MMI Menu Map

1 SETUP PARAMETERS
2 SPECIAL BLOCKS
3 TENS+COMP CALC.
- STATIC COMP
- DYNAMIC COMP
- REWIND
- FIX. INERTIA COMP
- VAR. INERTIA COMP
- ROLL WIDTH/MASS
- LINE SPEED SPT
- FILTER T.C.
- RATE CAL
- NORMALISED dv/dt
- INERTIA COMP O/P
- TENSION SCALER

DIAMETER CALC.

Parameter	Tag	Range
FIX. INERTIA COMP	**479**	**-300.00 to 300.00 %**
Fixed inertia compensation set-up parameter.		
VAR. INERTIA COMP	**480**	**-300.00 to 300.00 %**
Variable inertia compensation set-up parameter.		
ROLL WIDTH/MASS	**481**	**0.00 to 100.00 %**
Scales the inertia fixed and variable compensations based on roll width. 100% = maximum roll width.		
LINE SPEED SPT	**498**	**-105.00 to 105.00 %**
Used to calculate the line speed acceleration rate value for the fixed and variable inertia compensations.		
FILTER T.C.	**482**	**0 to 20000**
The line speed acceleration rate value is calculated from the line speed input. The calculated rate value may have a large ripple content that can disturb the motor torque. The rate signal is therefore filtered, and this filter has a time constant set by this parameter.		
RATE CAL	**483**	**-100.00 to 100.00**
Scales the inertia compensation acceleration/deceleration rate value to 100% of the maximum line ramp rate. This parameter should be set to the maximum time required to ramp from zero to full speed in seconds. If RATE CAL = 0.00, then this parameter is set externally through NORMALISED dv/dt, otherwise, RATE CAL sets the inertia compensation acceleration/deceleration rate. *Note - Inertia compensation does not work well for line ramp rates above 100 seconds and therefore this parameter is limited to 100.00.*		
NORMALISED dv/dt	**484**	**-300.00 to 300.00 %**
Useful for large line ramp rates (>100 Secs). Tag an external signal to NORMALISED dv/dt to set the inertia compensation acceleration/deceleration rate externally from the drive. Useful for ramp rates exceeding 100 seconds. The external signal must be normalised to 100% = the maximum line ramp rate. Active *only* when RATE CAL = 0.00.		
TENSION SCALER	**486**	**-3.0000 to 3.0000**
Scales the TENSION DEMAND which is directly connected from the TAPER CALC. function block.		
DIAMETER	**427**	**—.xx %**
This is the output of the block.		
MOD OF LINE SPEED	**428**	**—.xx %**
Modulus of line speed.		
MOD OF REEL SPEED	**429**	**—.xx %**
Modulus of reel speed.		
UNFILTERED DIAMETER	**430**	**—.xx %**
Unfiltered value of “diameter” (before RAMP RATE filter).		
TAPERED DEMAND	**452**	**—.xx %**
This is the output of the TAPER calculation on the TENSION SPT (before adding TENSION TRIM).		

DIAMETER CALC.

Parameter	Tag	Range
TOT. TENS. DEMAND	**441**	**—.xx %**
This is the final output of this block (total tension demand) which can be connected to the appropriate points in the block diagram.		
INERTIA COMP O/P	**485**	**—.xx %**
Monitors the sum of all inertia compensations.		
OUTPUT	**706**	**—.xx %**
The sum of the diameter-scaled TENSION DEMAND after the TENSION SCALER scaling and the compensation losses. For open loop winder applications, connect this output to the TORQUE DEMAND (Tag 432) in the TORQUE CALC. function block. (This output is located in the SYSTEM::CONFIGURE I/O::BLOCK DIAGRAM menu).		

Functional Description

DIAMETER CALC.

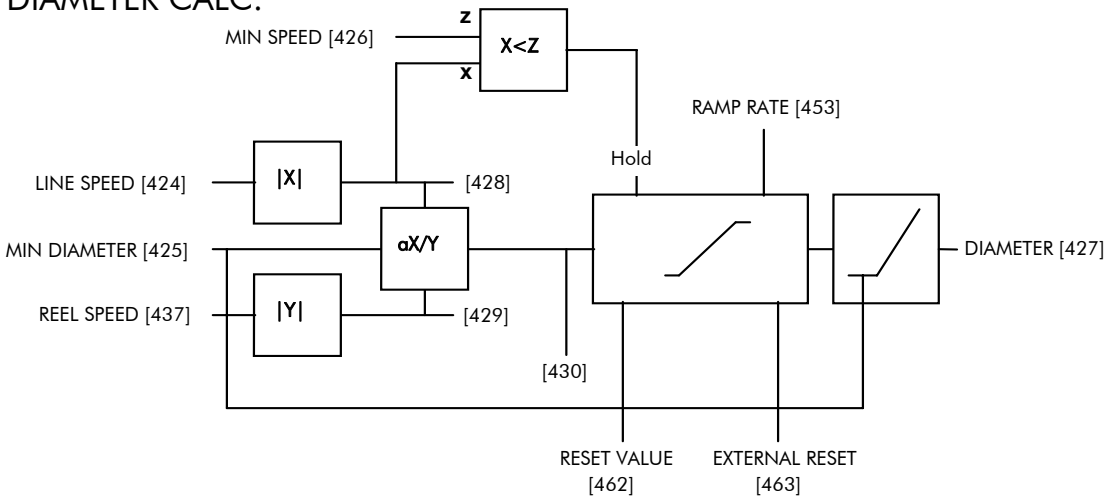

Circumference = πD or Line Speed (S) = Reel Speed (ωr) x D

Thus $D = \dfrac{S}{\omega r}$

i.e. $D \propto \dfrac{\text{Line Speed (S)}}{\text{Reel Speed } (\omega r)}$

Therefore with the web intact we can calculate the diameter from the two speeds.

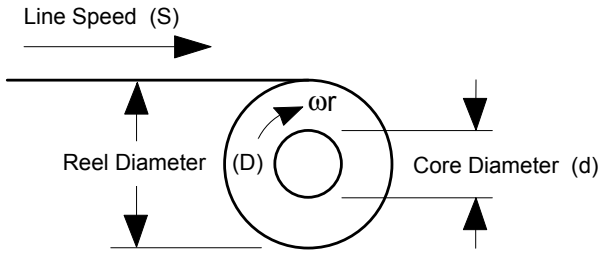

TAPER CALC

Use this to profile the tension demand with diameter.

The function uses two inputs, tension setpoint and taper setpoint, to create the tension demand. The operator usually controls these setpoints.

Taper is a common requirement for winders. It reduces the tension as the roll diameter increases.

A profiler adjusts the tension using the equation:

$$\text{Tapered Demand} = \text{Tension Spt} \times \left\{ 100\% - \frac{\text{Taper}}{\text{Diameter}} \times \left(\text{Diameter} - \text{Min Diameter} \right) \right\}$$

to yield a hyperbolic taper output. The taper tension characteristics are shown below:

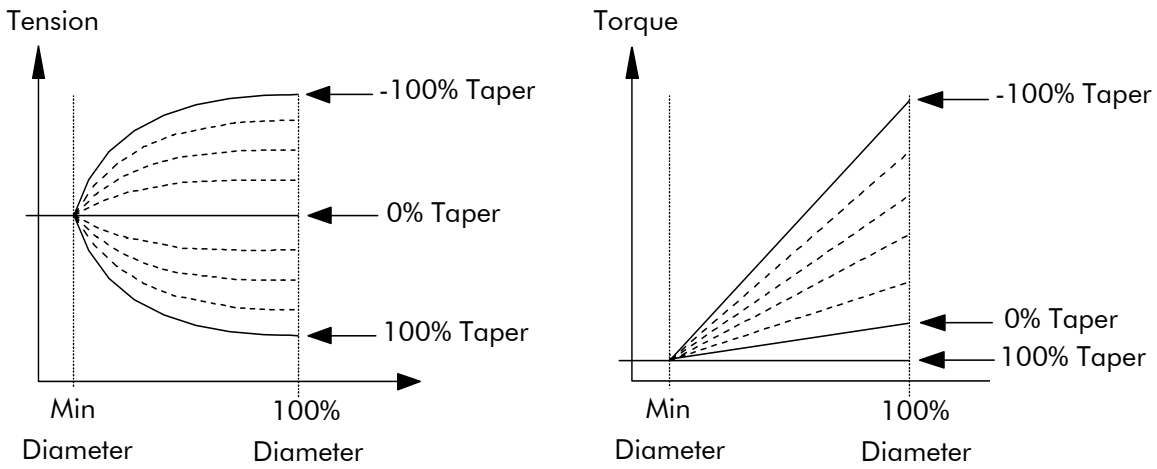

The result is multiplied by TENSION SPT. to get TAPER DEMAND. When the taper setpoint is at 100%, the motor produces constant torque. That is, a constant torque from core to full roll, and the tension falls off as the roll builds.

TENSION TRIM allows the tension demand to be adjusted, for example, when using closed loop trim. The result is TOT. TENS DEMAND.

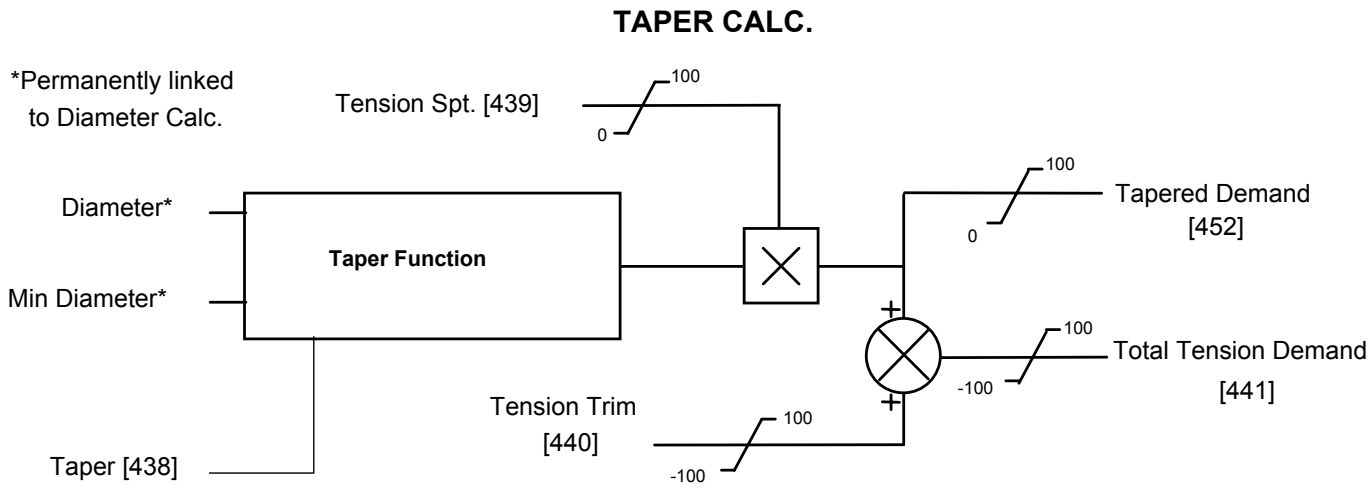

TENS+COMP CALC

This provides additional torque to compensate for static and dynamic friction, as well as the load inertia.

Add these losses to the diameter-scaled tension demand to produce a compensated torque demand for open loop winder applications.

The inputs to this function are DIAMETER, TOT. TENS. DEMAND, and SPEED FEEDBACK from the SPEED LOOP function block.

For open loop winder applications, connect OUTPUT to TORQUE DEMAND (Tag 432) in the TORQUE CALC. function block.

Static and Dynamic Frictional Losses

Static and dynamic friction are due to gearbox resistance and mechanical binding in the winder spindle and motor bearings. Both absorb motor output torque and require compensation to maintain accurate winder tension.

Static friction, or "stiction", is a constant offset most noticeable at or near zero speed. The compensation torque required to overcome static friction is fixed over an entire operating speed range. You can ignore "stiction" for winders which do not normally operate at zero speeds.

Dynamic friction results from friction losses within the drive train, which includes gearboxes and chain belting linkages. The oil viscosity in gearboxes and windage losses in the motor armature fans also contribute to dynamic frictional losses.

The effects of static and dynamic friction are shown opposite.

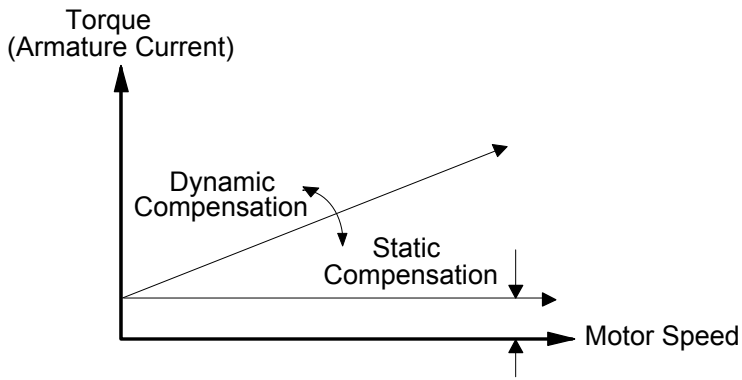

Inertia Compensation

Many winders need inertia compensation to add or subtract torque during acceleration and deceleration to maintain constant tension, especially at large roll diameters. Without compensation, the tension holding capability of open loop winders diminishes during speed changes causing tension sag.

The inertia compensation characteristics is shown opposite.

For winder applications, inertia compensation is split into two components:

1. Fixed inertia compensation for the fixed motor, transmission and load components.
2. Variable inertia compensation for the changing roll inertia. This is especially necessary for high diameter build unwinds and winders.

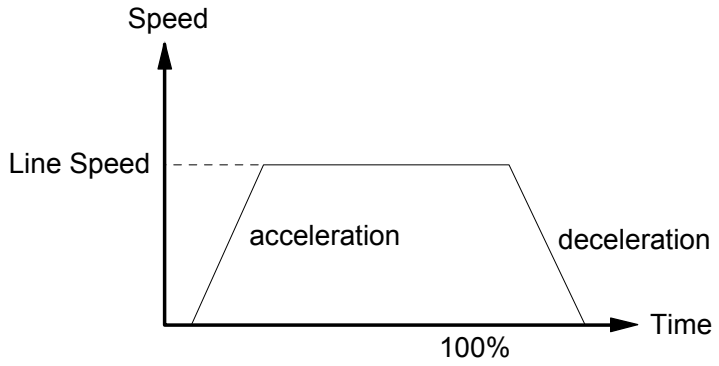

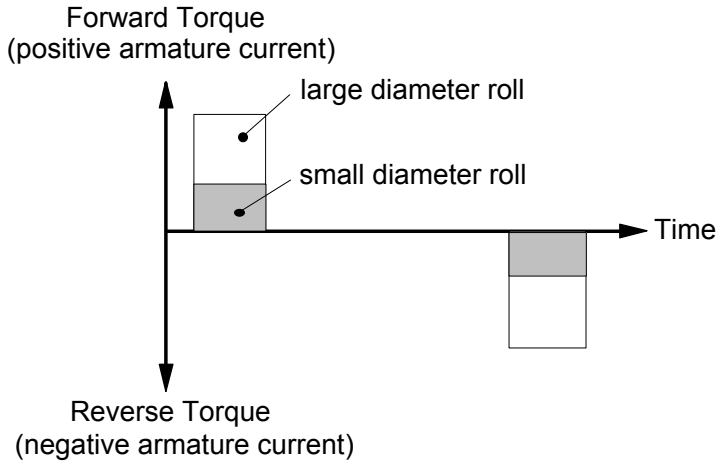

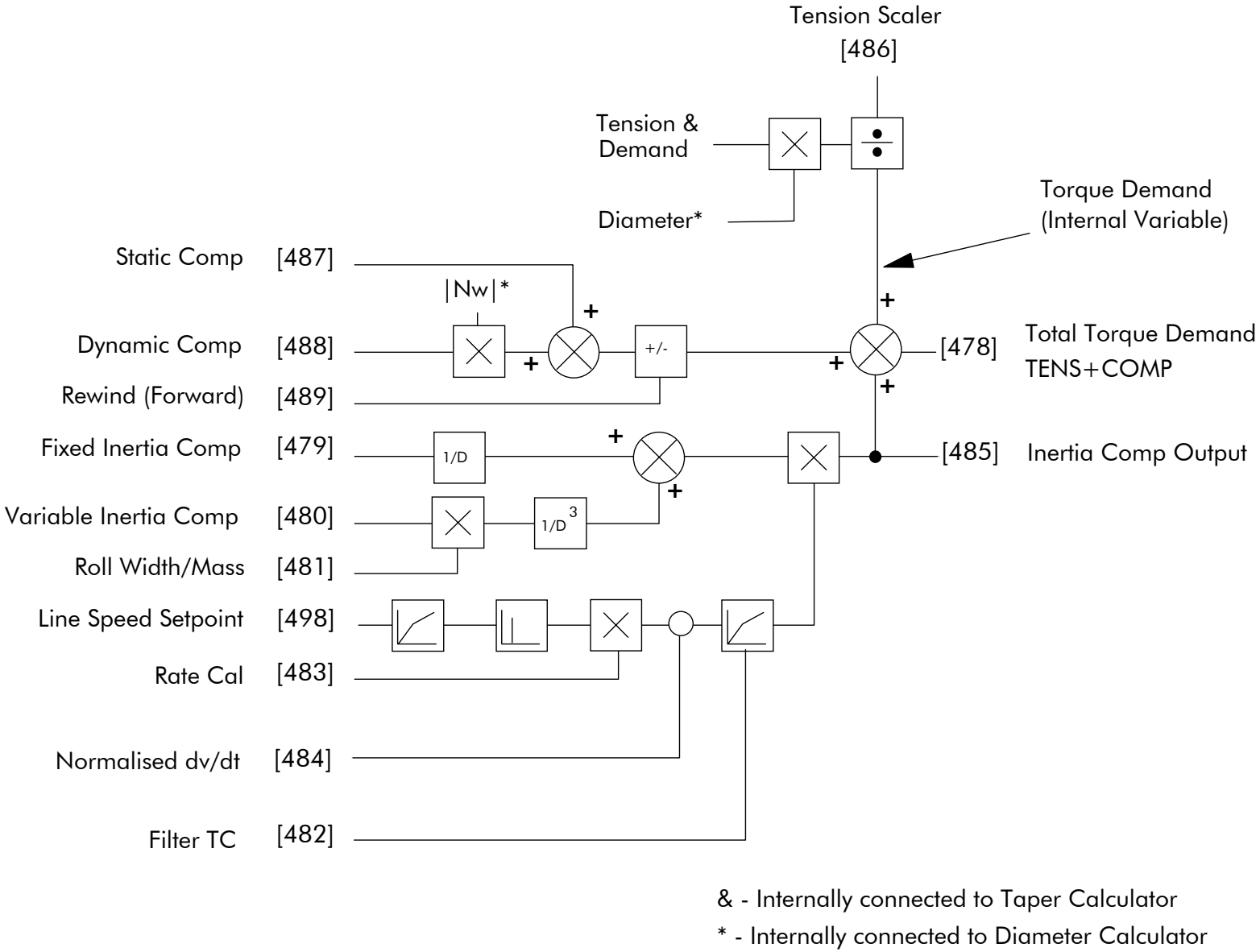

TENS + COMP Block Diagram

MMI Menu Map

1 SYSTEM
2 CONFIGURE I/O
3 DIGITAL INPUTS
4 DIGIN 1 (C6)
4 DIGIN 2 (C7)
4 DIGIN 3 (C8)
- VALUE FOR TRUE
- VALUE FOR FALSE

DIGITAL INPUTS

Use this block to control the digital operating parameters of the software.

The digital input can be configured to point to a destination location, and to set that destination TRUE or FALSE depending upon programmable values.

FUNCTION BLOCKS\INPUTS & OUTPUTS\DIGITAL INPUT\DIGITAL INPUT 1

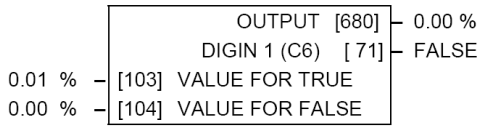

FUNCTION BLOCKS\INPUTS & OUTPUTS\DIGITAL INPUT\DIGITAL INPUT 2

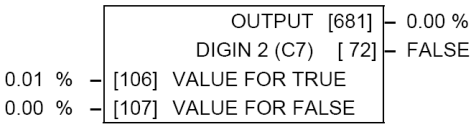

FUNCTION BLOCKS\INPUTS & OUTPUTS\DIGITAL INPUT\DIGITAL INPUT 3

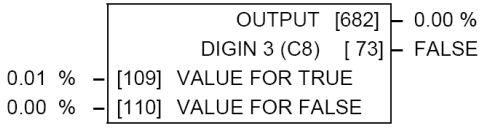

FUNCTION BLOCKS\INPUTS & OUTPUTS\DIGITAL INPUT\DIGITAL INPUT 4

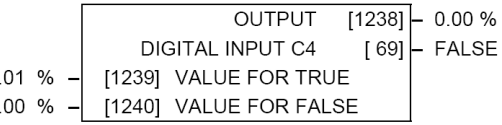

FUNCTION BLOCKS\INPUTS & OUTPUTS\DIGITAL INPUT\DIGITAL INPUT 5

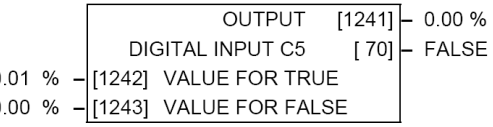

DIGITAL INPUTS

Parameter	Tag	Range
VALUE FOR TRUE	**103, 106, 109, 1239**	**-300.00 to 300.00 %**
The output value when input is TRUE, that is: Digital Input 1, terminal C6 = 24V (True) Digital Input 2, terminal C7 = 24V (True) Digital Input 3, terminal C8 = 24V (True)		
VALUE FOR FALSE	**104, 107, 110, 1240**	**-300.00 to 300.00 %**
The output value when input is FALSE, that is: Digital Input 1, terminal C6 = 0V (False) Digital Input 2, terminal C7 = 0V (False) Digital Input 3, terminal C8 = 0V (False)		
OUTPUT	**680, 681, 682, 1238**	**—.xx %**
The output value, this is either VALUE FOR TRUE or VALUE FOR FALSE.		
DIGIN 1 (C6) to DIGITAL INPUT C5	**71, 72, 73, 69**	**OFF / ON**
The Boolean representation of the actual voltage applied to the terminal.		

Digital Input Examples

Using Digital Inputs with LOGIC Parameters

Logic parameters have values of 1/0: TRUE/FALSE, ON/OFF, ENABLED/DISABLED etc.

For example, the default connections in the drive allow the Digital Inputs to switch LOGIC parameters. These are the connections from:

- Terminal C6 to Tag 90 (BIPOLAR CLAMPS)
- Terminal C7 to Tag 118 (RAMP HOLD)
- Terminal C8 to Tag 119 (I DMD. ISOLATE)

In each case, the state of the terminal (24V or 0V) switches the destination parameter by sending a 1 or 0.

The format for the VALUE FOR TRUE and VALUE FOR FALSE parameters is in percent, thus 0.00% = 0 and 0.01% (or any other non-zero positive number) = 1.

Inverting the Input Signal

The default setting is for VALUE FOR TRUE to be 0.01% and VALUE FOR FALSE to be 0.00%. Inverting the digital input is therefore simple; set VALUE FOR TRUE to 0.00% and VALUE FOR FALSE to 0.01% (or any other non-zero number).

To do this:

1. Set CONFIGURE I/O::CONFIGURE ENABLE to TRUE
2. Set DIGIN 1 (C6)::VALUE FOR TRUE to 0.00%
3. Set VALUE FOR FALSE to 0.01%
4. Reset CONFIGURE I/O::CONFIGURE ENABLE to FALSE

Digital Input 1 now sends a 0 when the input signal is TRUE, and 1 when it is FALSE.

Using Digital Inputs with VALUE Parameters

Value parameters have values such as 100.00, or with units like 50.00%, 10.0 SECS etc.

You can use a Digital Input to send two fixed values to a VALUE parameter depending upon the state of the input terminal, 24V or 0V. You set the two fixed values you require in the VALUE FOR TRUE and VALUE FOR FALSE parameters.

For example, to connect Digital Input 1 to SPEED LOOP::SPD.PROP.GAIN :

1. Set CONFIGURE I/O::CONFIGURE ENABLE to TRUE
2. Find the tag number for SPD.PROP.GAIN either from the function block detail in this chapter, or from the Parameter Table: MMI Order - refer to Appendix C. (It is 14).
3. Set DIGIN 1 (C6)::DESTINATION TAG to 14
4. Set VALUE FOR TRUE to 10.00%
5. Set VALUE FOR FALSE to 30.00%
6. Reset CONFIGURE I/O::CONFIGURE ENABLE to FALSE

Digital Input 1 will now set SPD.PROP.GAIN to two values depending upon the state of the input signal:

- When the input terminal is at 24V, SPD.PROP.GAIN is set to 10.00
- When the input terminal is at 0V, SPD.PROP.GAIN is set to 30.00

DIGITAL INPUT C5

Caution

If you are isolating power on the drive output using a DC contactor, you must use an auxiliary, normally-open contact connected to terminal C5 to immediately disable the drive's current loop when the contactor coil de-energises. Free-up terminal C5 for other uses **only** when isolating main power on the input side of the drive using an AC contactor.

NOTE **Some 590 DRV models isolate power on the 590 drive output using a DC contactor, so you cannot use terminal C5 as an additional digital input.**

Additional Digital Inputs

It is possible to use an Analog Input as a Digital Input to extend the number of Digital Inputs available. Again, 0.00% is regarded as Logic 0 and 0.01% (or any other non-zero positive value) is regarded as Logic 1.

Using Analog I/P as Digital I/P

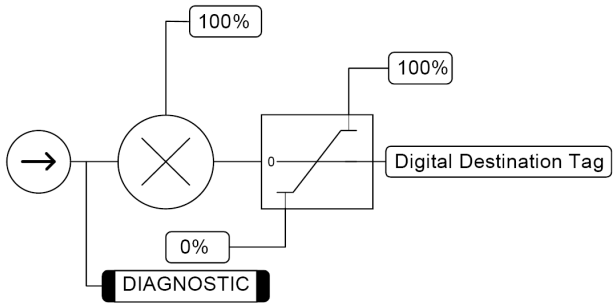

DIGITAL OUTPUTS

MMI Menu Map

1 SYSTEM
2 CONFIGURE I/O
3 DIGITAL OUTPUTS
4 DIGOUT 1 (B5)
4 DIGOUT 2 (B6)
4 DIGOUT 3 (B7)
- THRESHOLD (>)
- MODULUS
- SOURCE TAG
- INVERTED

Thes function block allows you to output digital parameters within the software to other equipment.

A digital output can be configured to point to any digital value within the software system and to output information depending upon the status of that value.

FUNCTION BLOCKS\INPUTS & OUTPUTS\DIGITAL OUTPUT\DIGITAL OUTPUT 1

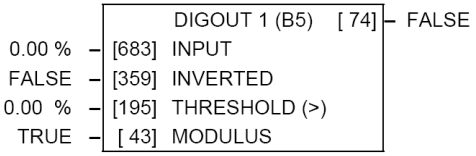

FUNCTION BLOCKS\INPUTS & OUTPUTS\DIGITAL OUTPUT\DIGITAL OUTPUT 2

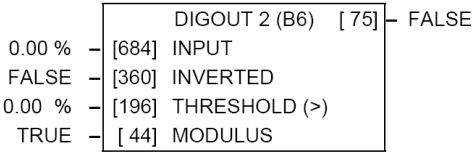

FUNCTION BLOCKS\INPUTS & OUTPUTS\DIGITAL OUTPUT\DIGITAL OUTPUT 3

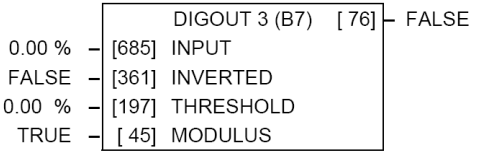

DIGITAL OUTPUTS

Parameter	Tag	Range
INPUT The unprocessed value to output.	**683, 684, 685**	**—.xx %**
INVERTED Selects to invert the output when TRUE.	**359, 360, 361**	**FALSE / TRUE**
THRESHOLD (THRESHOLD (>)) The threshold which the input value must exceed to set the output to TRUE.	**195, 196, 197**	**-300.00 to 300.00 %**
MODULUS When TRUE, the absolute value of INPUT is used for the threshold test.	**43, 44, 45**	**FALSE / TRUE**
DIGOUT 1 (B5) to DIGOUT 3 (B7) The actual Boolean value sent to the output terminal.	**74, 75, 76**	**OFF / ON**

Functional Description

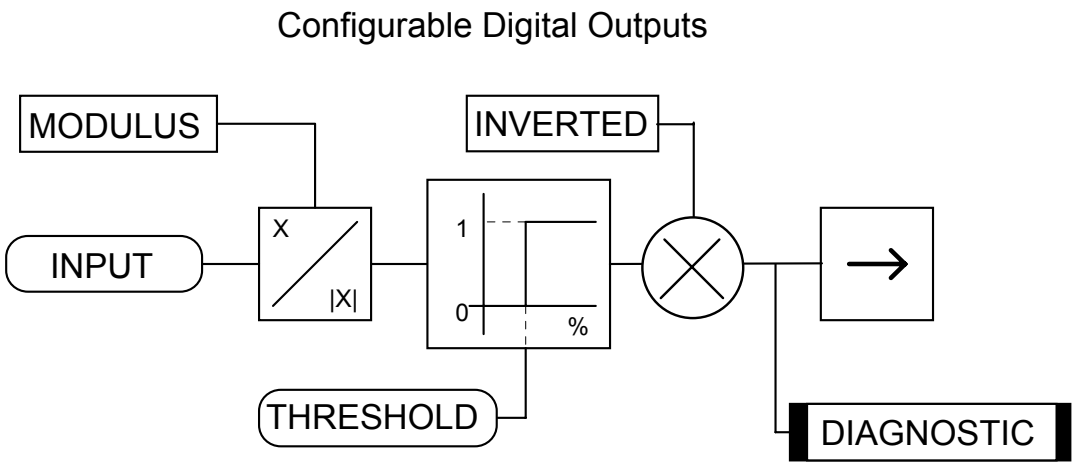

Digital Output Examples

Using Digital Outputs with LOGIC Parameters

Logic parameters have values of 1/0: TRUE/FALSE, ON/OFF, ENABLED/DISABLED etc.

For example, the (logic) default connections in the drive allow the Digital Outputs to provide (source) 24V or 0V dc depending upon the state of following tag connections:

- Terminal B5, Digital Output 1 is linked to Tag Number 77 (AT ZERO SPEED)
- Terminal B6, Digital Output 2 is linked to Tag Number 122 (HEALTH LED)
- Terminal B7, Digital Output 3 is linked to Tag Number 125 (READY)

In each case, the state of the source parameter defines the voltage available at the terminal (TRUE = 24V, FALSE = 0V when INVERTED = FALSE). Inverting the digital output is simple; set INVERTED to TRUE.

Using Digital Outputs with VALUE Parameters (Up-to-speed Detector)

Value parameters have values such as 100.00, or with units like 50.00%, 10.0 SECS etc.

For example, to connect Digital Output 1 to read UNFIL.SPD.FBK:

1. Set CONFIGURE I/O::CONFIGURE ENABLE to TRUE
2. Find the tag number for UNFIL.SPD.FBK either from the function block detail in this chapter, or from the Parameter Table: MMI Order - refer to Appendix C. (It is 62).
3. Set DIGITAL OUTPUTS::DIGOUT 1 (B5)::SOURCE TAG to 62
4. Set DIGITAL OUTPUTS::DIGOUT 1 (B5)::THRESHOLD(>) to 50.00%
5. Set DIGITAL OUTPUTS::DIGOUT 1 (B5)::MODULUS to TRUE
6. Set DIGITAL OUTPUTS::DIGOUT 1 (B5)::INVERTED to FALSE
7. Set CONFIGURE I/O::CONFIGURE ENABLE to FALSE

This option is useful for generating an "up-to-speed" output. The MODULUS removes the sign from the value (so -100 becomes 100). The THRESHOLD(>) parameter determines when the output is 24V or 0V dc (the input signal must exceed this setting for the output to go high). Set INVERTED to TRUE to invert the result of the output.

DRIVE INFO

This block provides information to identify the drive hardware and firmware version.

FUNCTION BLOCKS\MISCELLANEOUS\DRIVE INFO

	PRODUCT CODE [510]	1
	FRAME ID [626]	0
	VERSION NUMBER [155]	0x0000
1	[545] PCODE ID	

MMI Menu Map

1 SERIAL LINKS
2 SYSTEM PORT (P3)
VERSION NUMBER

MMI Menu Map

1 FUNCTION BLOCKS
2 MISCELLANEOUS
3 DRIVE INFO
PCODE ID
PRODUCT CODE
FRAME ID

DRIVE INFO

Parameter	Tag	Range
PCODE ID	**545**	**0 to 100**

The product code. This representation is guaranteed to be unchanged between different software versions.

0: INVALID	71: DC 4Q 35A D	27: DC 4Q 450A D	45: DC 4Q 2200A 40 D	65: DC RETRO 4Q 720A
1: DC 4Q 15A	72: DC 2Q 35A D	28: DC 2Q 450A D	46: DC 2Q 2200A 40 D	66: DC RETRO 2Q 720A
2: DC 2Q 15A	73: DC 4Q 70A D	29: DC 4Q 720A D	47: DC 4Q 2700A 40 D	67: DC RETRO 4Q 128A
3: DC 4Q 35A	74: DC 2Q 70A D	30: DC 2Q 720A D	48: DC 2Q 2700A 40 D	68: DC RETRO 2Q 128A
4: DC 2Q 35A	75: DC 4Q 110A D	31: DC 4Q 800A D	49: DC 4Q 1200A 60 D	69: DC HW SCALE 4Q D
5: DC 4Q 40A	76: DC 2Q 110A D	32: DC 2Q 800A D	50: DC 2Q 1200A 60 D	70: DC HW SCALE 2Q D
6: DC 2Q 40A	77: DC 4Q 150A D	85: DC 4Q 1024* 30*D	51: DC 4Q 1700A 60 D	87: DC 2Q 40A
7: DC 4Q 55A	78: DC 2Q 150A D	86: DC 2Q 1024* 30*D	52: DC 2Q 1700A 60 D	88: DC 4Q 40A
8: DC 2Q 55A	21: DC 4Q 180A D	33: DC 4Q 1200A 20 D	53: DC 4Q 2200A 60 D	89: DC 4Q 725A
9: DC 4Q 70A	22: DC 2Q 180A D	34: DC 2Q 1200A 20 D	54: DC 2Q 2200A 60 D	90: DC 2Q 725A
10: DC 2Q 70A	23: DC 4Q 270A D	35: DC 4Q 1700A 20 D	55: DC 4Q 2700A 60 D	91: DC 4Q 830A
11: DC 4Q 90A	24: DC 2Q 270A D	36: DC 2Q 1700A 20 D	56: DC 2Q 2700A 60 D	92: DC 2Q 830A
12: DC 2Q 90A	79: DC 4Q 128* 20* D	37: DC 4Q 2200A 20 D	57: DC 4Q 1200A 80 D	93: DC 4Q 1580A
13: DC 4Q 110A	80: DC 2Q 128* 20* D	38: DC 2Q 2200A 20 D	58: DC 2Q 1200A 80 D	94: DC 2Q 1580A
14: DC 2Q 110A	81: DC 4Q 1024* 20*D	39: DC 4Q 2700A 20 D	59: DC 4Q 1700A 80 D	95: DC 4Q 275A
15: DC 4Q 125A	82: DC 2Q 1024* 20*D	40: DC 2Q 2700A 20 D	60: DC 2Q 1700A 80 D	96: DC 2Q 275A
16: DC 2Q 125A	83: DC 4Q 1024* 30*D	41: DC 4Q 1200A 40 D	61: DC 4Q 2200A 80 D	97: DC 4Q 380A
17: DC 4Q 162A	84: DC 2Q 1024* 30*D	42: DC 2Q 1200A 40 D	62: DC 2Q 2200A 80 D	98: DC 2Q 380A
18: DC 2Q 162A	25: DC 4Q 360A D	43: DC 4Q 1700A 40 D	63: DC 4Q 2700A 80 D	99: DC 4Q 500A
19: DC 4Q 165A	26: DC 2Q 360A D	44: DC 2Q 1700A 40 D	64: DC 2Q 2700A 80 D	100: DC 2Q 500A
20: DC 2Q 165A				

DRIVE INFO

Parameter	Tag	Range
PRODUCT CODE	**510**	**0 to 96**

An internal representation of the product code. This representation may change between software versions.

0: INVALID	21: DC 4Q 35A D	41: DC 4Q 450A D	61: DC 4Q 2200A 40 D	81: DC RETRO 4Q 128A
1: DC 4Q 15A	22: DC 2Q 35A D	42: DC 2Q 450A D	62: DC 2Q 2200A 40 D	82: DC RETRO 2Q 128A
2: DC 2Q 15A	23: DC 4Q 70A D	43: DC 4Q 720A D	63: DC 4Q 2700A 40 D	83: DC 2Q 40A
3: DC 4Q 35A	24: DC 2Q 70A D	44: DC 2Q 720A D	64: DC 2Q 2700A 40 D	84: DC 4Q 40A
4: DC 2Q 35A	25: DC 4Q 110A D	45: DC 4Q 800A D	65: DC 4Q 1200A 60 D	85: DC 4Q 725A
5: DC 4Q 40A	26: DC 2Q 110A D	46: DC 2Q 800A D	66: DC 2Q 1200A 60 D	86: DC 2Q 725A
6: DC 2Q 40A	27: DC 4Q 150A D	47: DC 4Q 1024* 30*D	67: DC 4Q 1700A 60 D	87: DC 4Q 830A
7: DC 4Q 55A	28: DC 2Q 150A D	48: DC 2Q 1024* 30*D	68: DC 2Q 1700A 60 D	88: DC 2Q 830A
8: DC 2Q 55A	29: DC 4Q 180A D	49: DC 4Q 1200A 20 D	69: DC 4Q 2200A 60 D	89: DC 4Q 1580A
9: DC 4Q 70A	30: DC 2Q 180A D	50: DC 2Q 1200A 20 D 51: DC	70: DC 2Q 2200A 60 D	90: DC 2Q 1580A
10: DC 2Q 70A	31: DC 4Q 270A D	4Q 1700A 20 D	71: DC 4Q 2700A 60 D	91: DC 4Q 275A
11: DC 4Q 90A	32: DC 2Q 270A D	52: DC 2Q 1700A 20 D	72: DC 2Q 2700A 60 D	92: DC 2Q 275A
12: DC 2Q 90A	33: DC 4Q 128* 20* D	53: DC 4Q 2200A 20 D	73: DC 4Q 1200A 80 D	93: DC 4Q 380A
13: DC 4Q 110A	34: DC 2Q 128* 20* D	54: DC 2Q 2200A 20 D	74: DC 2Q 1200A 80 D	94: DC 2Q 380A
14: DC 2Q 110A	35: DC 4Q 1024* 20*D	55: DC 4Q 2700A 20 D	75: DC 4Q 1700A 80 D	95: DC 4Q 500A
15: DC 4Q 125A	36: DC 2Q 1024* 20*D	56: DC 2Q 2700A 20 D	76: DC 2Q 1700A 80 D	96: DC 2Q 500A
16: DC 2Q 125A	37: DC 4Q 1024* 30*D	57: DC 4Q 1200A 40 D	77: DC 4Q 2200A 80 D	
17: DC 4Q 162A	38: DC 2Q 1024* 30*D	58: DC 2Q 1200A 40 D	78: DC 2Q 2200A 80 D	
18: DC 2Q 162A	39: DC 4Q 360A D	59: DC 4Q 1700A 40 D	79: DC 4Q 2700A 80 D	
19: DC 4Q 165A	40: DC 2Q 360A D	60: DC 2Q 1700A 40 D	80: DC 2Q 2700A 80 D	
20: DC 2Q 165A				

FRAME ID	**626**	**—.**

An internal representation of the frame size.

VERSION NUMBER	**155**	**0x0801**

The drive's version number as seen via communications. Version 8.01 is represented as 0x0801.

Serial communications mnemonic = V0. The version number cannot be changed, and is software version dependent.

ENCODER

MMI Menu Map (from ENCODER 1)

1 CONFIGURE DRIVE
- ENCODER LINES
- ENCODER RPM
- ENCODER SIGN

MMI Menu Map (from ENCODER 1)

1 DIAGNOSTICS
- ENCODER
- UNFIL. ENCODER

MMI Menu Map

1 FUNCTION BLOCKS
2 MOTOR CONTROL
3 ENCODER
4 ENCODER 1
4 ENCODER 2
- SPEED FEEDBACK
- ENCODER TYPE

This block allows the Speed Feedback to be measured using a quadrature encoder when a Speed Feedback Option is fitted - refer to Chapter 3: Speed Feedback and Technology Options.

FUNCTION BLOCKS\MOTOR CONTROL\ENCODER\ENCODER 1

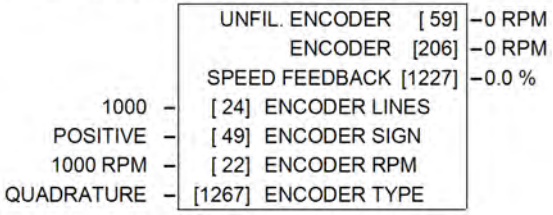

FUNCTION BLOCKS\MOTOR CONTROL\ENCODER\ENCODER 2

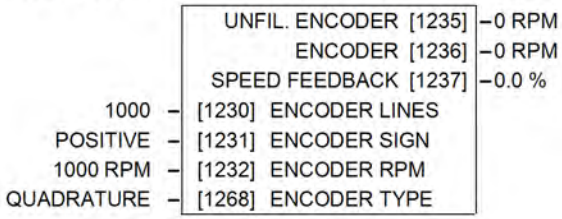

The ENCODER 1 function block is associated with the speed feedback option.

The ENCODER 2 function block is associated with Digital Input 2 (terminal C7) and Digital Input 3 (terminal C8) where:

- Digital Input 2 provides the clock.
- Digital Input 3 is used as a direction input.

ENCODER

Parameter	Tag	Range
ENCODER LINES	**24, 1230**	**10 to 5000**
The number of lines must be set to match the type of encoder being used. Incorrect setting of this parameter will result in an erroneous speed measurement. The 5901 Microtach has 1000 lines per revolution as standard. Proprietary encoders of other specifications can be normalised by setting this parameter as appropriate.		
ENCODER SIGN	**49, 1231**	**NEGATIVE / POSITIVE**
Since the encoder feedback cannot be reversed electrically, the signal polarity can be reversed by the control software. *It is necessary to set up this parameter when in CLOSED-LOOP VEC mode, as the encoder direction must be correct for this mode to operate.*		
ENCODER RPM	**22, 1232**	**0 to 6000**
Motor top speed setting (100%) when using encoder feedback.		
UNFIL. ENCODER	**59, 1235**	**—. RPM**
Unfiltered encoder speed in RPM		
ENCODER	**206, 1236**	**—. RPM**
Encoder speed in RPM		
SPEED FEEDBACK	**1227, 1237**	**—.x %**
Encoder speed in %. A speed of 100% indicates that the encoder is rotating at the value set in the ENCODER RPM parameter.		

ENCODER

Parameter	Tag	Range
ENCODER TYPE	**1267, 1268**	**See below**

Selects the operating mode of the encoder input. Both of these encoder function blocks can be used in either QUADRATURE or CLOCK/DIRECTION modes of operation. When in CLOCK/DIRECTION mode, the CLOCK input is applied to terminal A on the speed feedback option (for ENCODER 1) or to Digital Input 2 (for ENCODER 2), and every rising edge of the CLOCK is counted.

0 : CLOCK/DIRECTION
1 : QUADRATURE

Functional Description

You must configure Digital Input 2 and 3 which, by default, provide "Ramp Hold" and "Current Demand Isolate" functionality. In the default configuration they are linked using LINK 21 and LINK 22 respectively. The Encoder blocks are connected to terminals C7 and C8 internally and thus don't require these links. Use the Configurator Tool to delete the links.

Alternatively when the default configuration is loaded, this can be done using the Keypad as shown below:

Navigate to the SYSTEM::CONFIGURE I/O menu. Select the CONFIGURE ENABLE parameter and set to ENABLED. All LEDS on the Keypad will flash. Press the E key. Use the ▼ key to navigate to the DIGITAL INPUTS menu.

In this menu, select the DIGIN 2 (C7) menu. Navigate to the DESTINATION TAG parameter and set this value to 0 (zero). Repeat this operation for the DIGIN 3 (C8) parameter.

Remember to perform a Parameter Save.

ENCODER TYPE = CLOCK/DIRECTION

This (pulse-counting mode) Encoder Type can be set in the ENCODER 2 function block only.

Digital Input 2 (terminal C7) is used to provide the clock - the pulses are applied on C7

Digital Input 3 (terminal C8) is used as a direction input:

- When C8 is high, (24V), the count is incremented
- When C8 is low, (0V), the count is decremented

Each full pulse received increments the encoder count.
A full pulse is the pulse input going from low to high, and then back to low.
Speed is calculated using the following function:

$$\text{SPEED HZ} = \text{filter}\left[\frac{\text{CountsPerSecond}}{\text{Lines}}, \text{FilterTime}\right]$$

ENCODER TYPE = QUADRATURE

A quadrature encoder uses 2 input signals (A and B), phase shifted by a quarter of a cycle (90°).

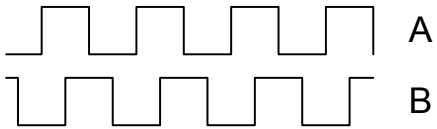

Digital input 2, (C7) = Encoder A phase

Digital input 3, (C8) = Encoder B phase

Direction is obtained by looking at the combined state of A and B.
Each edge received from the encoder increments the encoder count. There are 4 counts per line.
Speed is calculated using the following function:

$$\text{SPEED HZ} = \text{filter}\left[\frac{\text{CountsPerSecond}}{\text{Lines x 4}}, \text{FilterTime}\right]$$

FEEDBACKS

Diagnostics for the motor feedbacks.

MMI Menu Map

1 DIAGNOSTICS
- SPEED FEEDBACK
- CURRENT FEEDBACK
- UNFIL.FIELD FBK
- ARM VOLTS FBK
- TACH INPUT

FUNCTION BLOCKS\MOTOR CONTROL\FEEDBACKS

ARM VOLTS FBK	[605]	0 V
UNFIL.FIELD FBK	[181]	0.00 %
SPEED FEEDBACK	[207]	0.00 %
CURRENT FEEDBACK	[298]	0.00 %
TACH INPUT	[308]	0.0 %

FEEDBACKS

Parameter	Tag	Range
ARM VOLTS FBK Back EMF scaled by NOM MOTOR VOLTS.	**605**	**—.x V**
UNFIL.FIELD FBK Scaled field current feedback	**181**	**—.xx %**
SPEED FEEDBACK Speed feedback.	**207**	**—.xx %**
CURRENT FEEDBACK Scaled and filtered armature current feedback.	**298**	**—.xx %**
TACH INPUT Scaled analog tachogenerator feedback.	**308**	**—.x %**

FIELD CONTROL

MMI Menu Map

1 SETUP PARAMETERS
2 FIELD CONTROL
- FIELD ENABLE
- FLD.CTRL MODE
- FIELD I THRESH
- UP TO FIELD
- >> FLD.VOLTAGE VARS
- >> FLD.CURRENT VARS
- FLD.QUENCH DELAY
- FLD. QUENCH MODE

This function block contains all the parameters for the field operating mode.

It controls the drive's full wave, single phase, motor field thyristor bridge circuit.

The FIELD CONTROL function block is viewed in three sub-menus on the MMI: FLD VOLTAGE VARS, FLD CURRENT VARS and FLD WEAK VARS.

In the FIELD CONTROL menu, you select the field operating mode: open loop voltage control or closed loop current control.

The inputs to the FIELD CONTROL block come from FLD VOLTAGE VARS and FLD CURRENT VARS.

FIELD ENABLE controls the field thyristor bridge and is set to DISABLED in permanent field motor applications. Disabling the field automatically overrides the field fail alarm. If FIELD ENABLE is enabled, you can select between voltage and current control using the FLD CTRL MODE parameter. The default is VOLTAGE CONTROL.

The diagnostic DRIVE ENABLE (Tag 84) is also used by the FLD. QUENCH DELAY to delay disabling the field when Run is removed.

FUNCTION BLOCKS\MOTOR CONTROL\FIELD CONTROL

		FIELD ENABLED	[169]	DISABLED
		FIELD DEMAND	[183]	0.00 %
		FLD.FIRING ANGLE	[184]	0.00 DEG
		FIELD I FBK	[300]	0.00 %
		FIELD I FBK.AMPS	[539]	0.0 A
		UP TO FIELD	[618]	FALSE
		WEAK PID ERROR	[1185]	0.00 %
		WEAK PID OUT	[1186]	0.00 %
		FIELD STATE	[1187]	FIELD INIT
		BEMF INPUT	[1274]	0.00 %
ENABLED	[170]	FIELD ENABLE		
100.00 %	[171]	SETPOINT		
0.10	[173]	PROP. GAIN		
1.28	[172]	INT. GAIN		
DISABLED	[174]	FLD. WEAK ENABLE		
2.00	[175]	EMF LEAD		
40.00	[176]	EMF LAG		
0.30	[177]	EMF GAIN		
90.00 %	[179]	MIN FLD.CURRENT		
100.00 %	[178]	MAX VOLTS		
100	[191]	BEMF FBK LEAD		
100	[192]	BEMF FBK LAG		
0.0 s	[185]	FLD.QUENCH DELAY		
QUENCH	[186]	FLD.QUENCH MODE		
80.00 %	[617]	FIELD I THRESH		
VOLTAGE CONTROL	[209]	FLD. CTRL MODE		
90.0%	[210]	FLD.VOLTS RATIO		
LOCAL BEMF	[1273]	BEMF SOURCE		

FLD VOLTAGE VARS : MMI Sub-Menu

MMI Menu Map

1 SETUP PARAMETERS
2 FIELD CONTROL
3 FLD.VOLTAGE VARS
- FLD.VOLTS RATIO

Contains the parameter for the open loop VOLTAGE CONTROL mode.

In VOLTAGE CONTROL mode, set the value of FLD.VOLTS RATIO to provide the correct field voltage. This control mode provides open-loop phase angle control of the thyristor bridge. To calculate FLD.VOLTS RATIO, divide the desired DC field voltage by the line-to-line RMS AC input voltage and multiply by 100. Note that supply voltage variations are not compensated for in the field supply when in this mode of operation.

FLD CURRENT VARS : MMI Sub-Menu

MMI Menu Map

1 SETUP PARAMETERS
2 FIELD CONTROL
3 FLD.CURRENT VARS
- SETPOINT
- PROP. GAIN
- INT. GAIN
- >> FLD.WEAK VARS

Contains the parameters for the closed loop current control mode.

CURRENT CONTROL mode uses actual field current feedback for closed-loop control giving accurate motor field control independent of motor temperature. This mode makes use of a simple PI controller and is a pre-requisite for field weakening.

FLD WEAK VARS : MMI Sub-Menu

In certain applications of a DC motor controller, high speeds can only be achieved by reducing the field current and therefore the resultant torque. This is termed as the Constant-Horsepower region or Field-Weakening region, and the speed at which it begins is known as the Base Speed.

MMI Menu Map

1 SETUP PARAMETERS
2 FIELD CONTROL
3 FLD.CURRENT VARS
4 FLD.WEAK VARS
- FLD. WEAK ENABLE
- EMF LEAD
- EMF LAG
- EMF GAIN
- MIN FLD.CURRENT
- MAX VOLTS
- BEMF FBK LEAD
- BEMF FBK LAG

MMI Menu Map

1 DIAGNOSTICS
- FIELD ENABLED
- FIELD DEMAND
- FIELD I FBK
- FIELD I FBK.AMPS
- FLD.FIRING ANGLE

MMI Menu Map

1 FUNCTION BLOCKS
2 MOTOR CONTROL
3 FIELD CONTROL
- WEAK PID ERROR
- WEAK PID OUT
- FIELD STATE
- BEMF SOURCE
- BEMF INPUT

FIELD CONTROL

Parameter	Tag	Range
FIELD ENABLE	**170**	**DISABLED / ENABLED**
Enables and disables the drive motor Field Control.		
SETPOINT	**171**	**0.00 to 100.00 %**
Field current setpoint as percentage of calibrated value.		
PROP. GAIN	**173**	**0.00 to 100.00**
This is the proportional gain adjustment of the field current PI loop. The default of 0.10 is equivalent to a real gain of 10.		
INT. GAIN	**172**	**0.00 to 100.00**
This is the integral gain adjustment of the field current PI loop.		
FLD. WEAK ENABLE	**174**	**DISABLED/STANDARD/ADVANCED**
Activates the additional motor back-emf, gain-limited PI loop for field weakening (field spillover) control. STANDARD mode uses the control loop to convert the back-emf in excess of the MAX VOLTS setting, into a reduction of the demanded field current. ADVANCED mode also adds in a feedforward control term, based on a comparison of the speed feedback to the calculated base speed, and uses adaptive gain, in both the back-emf and speed control loops, to compensate for the gain effects of reduced field operation.		
EMF LEAD	**175**	**0.10 to 50.00**
With field weakening control enabled, a gain-limited PI loop is brought into operation. This is the lead time constant adjustment of the field weakening PI loop. With a default of 2.00, real time constant = 200ms. Refer to Chapter 5: "Control Loops" for details of Tuning.		
EMF LAG	**176**	**0.00 to 200.00**
This is the lag time constant adjustment of the field weakening PI loop With a default of 40.00, real time constant = 4000ms. Refer to Chapter 5: "Control Loops" for details of Tuning.		
EMF GAIN	**177**	**0.00 to 100.00**
This is the steady-state gain adjustment of the field weakening PI loop. With a default of 0.30, real gain = 30. Refer to Chapter 5: "Control Loops" for details of Tuning.		

FIELD CONTROL

Parameter	Tag	Range
MIN FLD. CURRENT	**179**	**0.00 to 100.00 %**
Protects against motor overspeeding due to unintended excessive field weakening. The field weakening loop reduces the field current to achieve speed control above base speed. At top speed the field reaches a minimum value. MIN FIELD CURRENT should be set below this minimum value to allow reasonable margin for transient control near the top speed but not lower than 6% as this could then cause the "Field Fail" alarm to operate.		
MAX VOLTS	**178**	**0.00 to 100.00 %**
Maximum volts is the back-emf voltage level at which field weakening begins. It is also known as "Spillover Bias". The default value is 100% of the nominal value as set by the armature voltage calibration value. This value might be reduced due to the known IR drop included in the armature voltage calibration value. Additionally for commissioning purposes, this value may be set to another (lower) desirable level, and subsequently returned to the original value.		
BEMF FBK LEAD	**191**	**20 to 5000**
This is the lead time constant of the back emf feedback filter which is used for reducing armature voltage overshoots when accelerating fast through base speed with a default of 100 (ms). Refer to Chapter 5: "Control Loops" for details of Tuning.		
BEMF FBK LAG	**192**	**20 to 5000**
This is the lag time constant of the above feedback filter. If the filter is active, the ratio of lead / lag should always be greater than 1 to give an overall lead action which reduces the voltage overshoot and less than, typically, 3 for stable control. The default values cancel each other and make the filter inactive with a default of 100 (ms). Refer to Chapter 5: "Control Loops" for details of Tuning.		
FLD. QUENCH DELAY	**185**	**0.0 to 600.0 s**
If dynamic breaking is used the field must be maintained for a period after the drive is disabled until the motor reaches zero speed. The field quench delay is the period of time that the field is maintained for when the drive is disabled.		
FLD. QUENCH MODE	**186**	**QUENCH / STANDBY**
After the field quench delay has expired, the field can be entirely quenched or put into a standby mode at 50% of rated current or volts depending whether in current or voltage control mode respectively. (The default standby value of 50% can be modified through the "SYSTEM / Reserved" Menu which is primarily for factory use only and requires the “super” password.)		
FIELD I THRESH	**617**	**0.00 to 100.00 %**
Threshold for UP TO FIELD diagnostic as a percentage of calibrated field current (see below).		
FLD. CTRL MODE	**209**	**See below**
Selects between open-loop VOLTAGE CONTROL or closed-loop CURRENT CONTROL.		
FLD. VOLTS RATIO	**210**	**0.0 to 100.0 %**
Sets the output dc field voltage as a percentage of the RMS FIELD supply voltage (line-to-line) when FLD CTRL MODE is set to VOLTAGE CONTROL.		
FIELD ENABLED	**169**	**DISABLED / ENABLED**
Refer to Chapter 6: "The Keypad" - The Keypad Menus (DIAGNOSTICS).		

FIELD CONTROL

Parameter	Tag	Range
FIELD DEMAND	**183**	**—.xx %**
Refer to Chapter 6: "The Keypad" - The Keypad Menus (DIAGNOSTICS).		
FLD. FIRING ANGLE	**184**	**—.xx DEG**
Refer to Chapter 6: "The Keypad" - The Keypad Menus (DIAGNOSTICS).		
FIELD I FBK.	**300**	**—.xx %**
Field current feedback, as a percentage of the calibrated level.		
FIELD I FBK.AMPS	**539**	**—.x A**
FIELD I FBK calibrated in Amps.		
UP TO FIELD	**618**	**FALSE / TRUE**
Field current feedback is above FIELD I THRESHOLD when TRUE. This may be used as part of a mechanical brake release strategy.		
WEAK PID ERROR	**1185**	**—.xx %**
Input error, as a percentage of calibrated Volts, to the field weakening controller. This is formed from the spill-over of filtered BEMF above the MAX VOLTS setting.		
WEAK PID OUT	**1186**	**—.xx %**
Output field reduction demand, as a percentage of calibrated field current, from the field weakening controller.		
FIELD STATE	**1187**	**See below**
State of the field controller. 0 : FIELD INIT 1 : FIELD QUENCH 2 : FIELD STANDBY 3 : FIELD FULL FLD 4 : FIELD TIMER indicates that the FLD.QUENCH DELAY timer is counting down 5 : FIELD ERROR 6 : LOCAL BEMF		
BEMF SOURCE	**1273**	**LOCAL BEMF / BEMF INPUT**
Selects the source of the back-emf feedback into the field weakening control loop. Setting LOCAL BEMF makes use of the back-emf measured at the armature terminals. Setting BEMF INPUT uses the value in the parameter BEMF INPUT as the feedback for the field weakening control.		

FIELD CONTROL

Parameter	Tag	Range
BEMF INPUT	**1274**	**—.xx %**

The feedback value of back-emf used for the field weakening control, when BEMF SOURCE is set to BEMF INPUT. It allows for the use of the field weakening control structure on motors not directly connected to the armature terminals. It can be wired within the block diagram to an analogue input or a communications path.

The use of this parameter is typically combined with parameters ISOL DMD SOURCE and 3-PHASE FIELD (CURRENT LOOP function block) to apply the drive to field weakening control of a motor field.

Note: If the ADVANCED field weakening mode is being used with an external back-emf feedback, ensure to apply the speed feedback so that the base speed calculator can function correctly.

FIELD CONTROL MODE : VOLTAGE

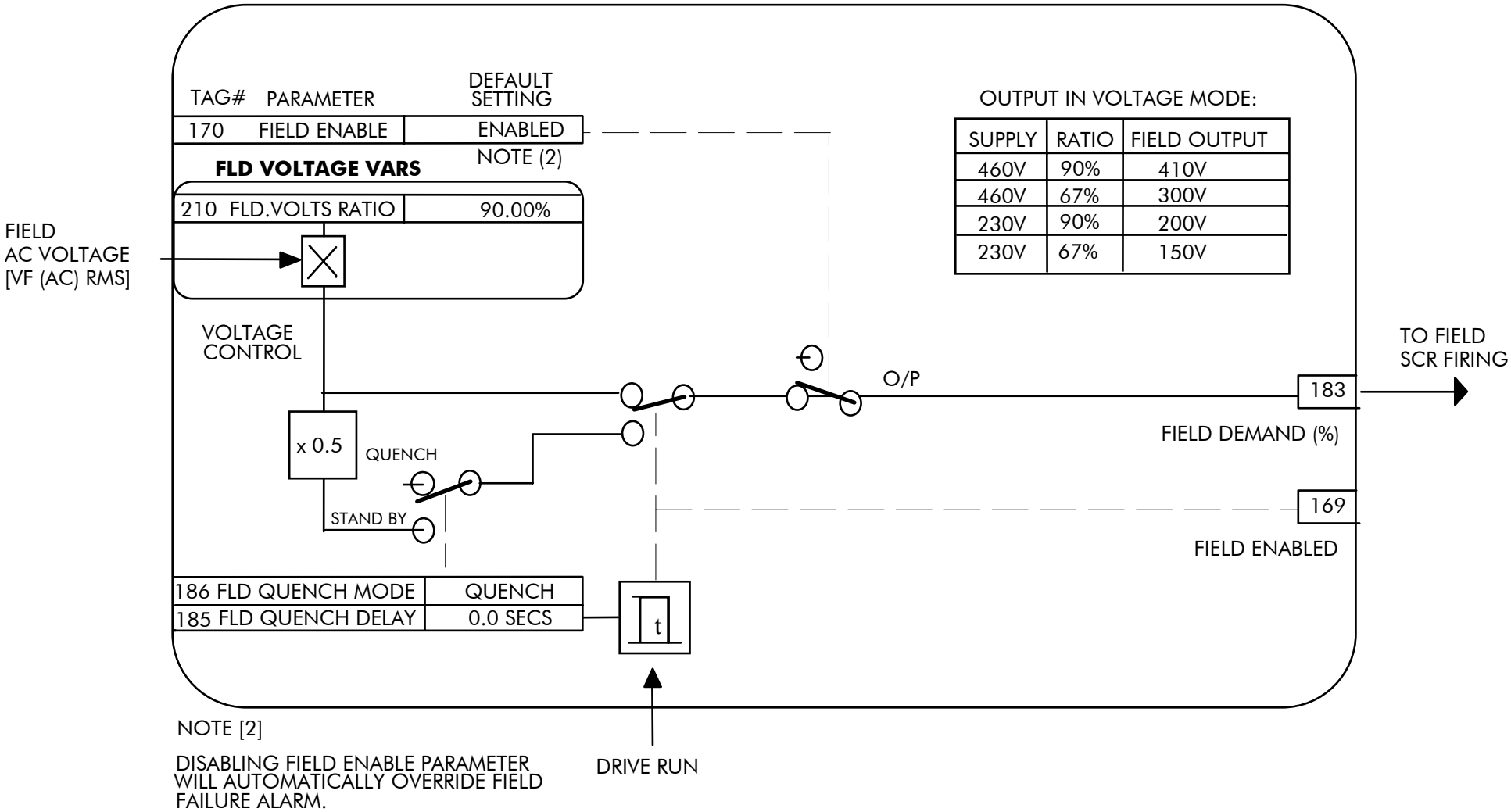

FIELD CONTROL MODE : CURRENT

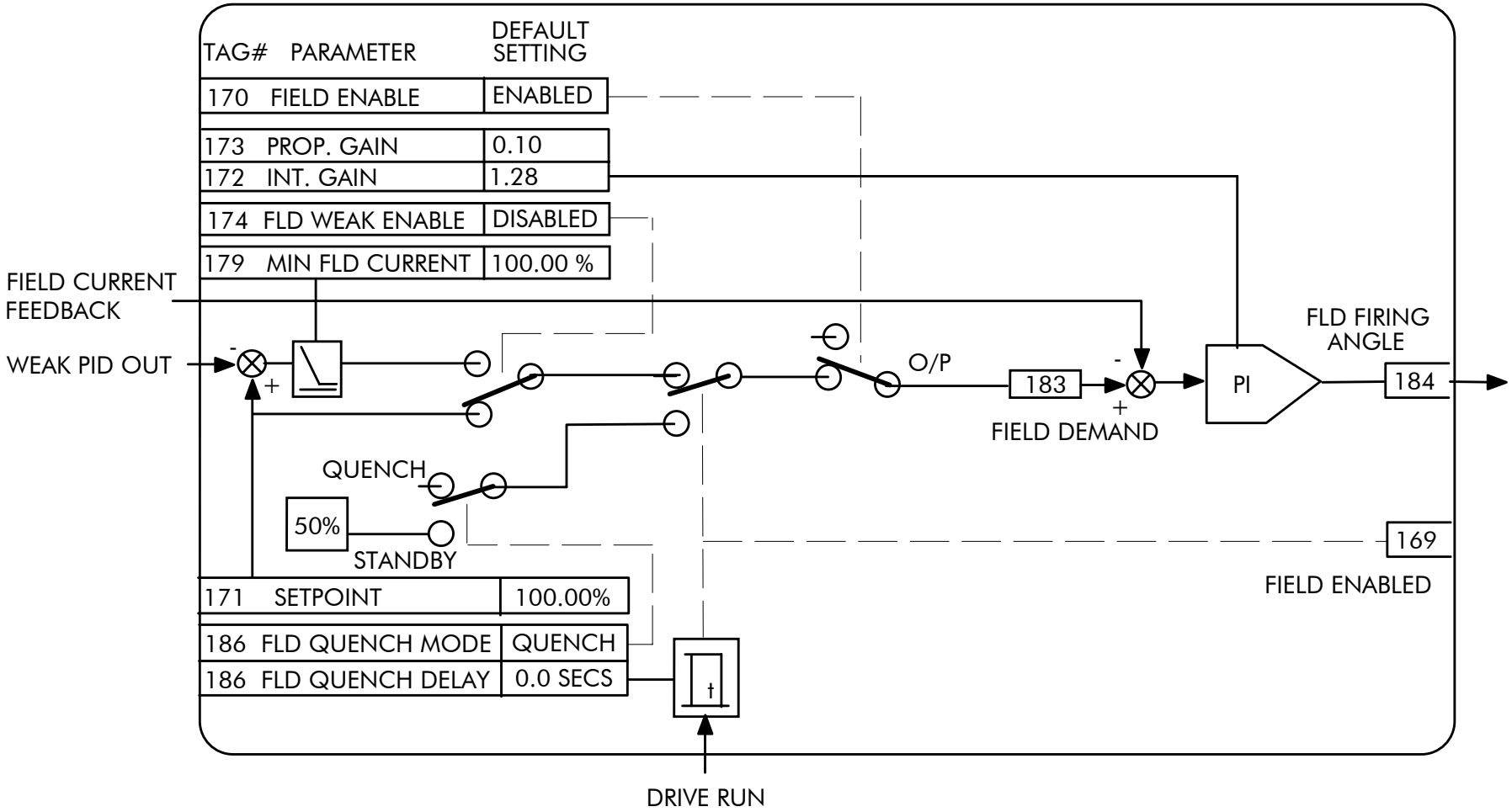

FLD WEAK VARS

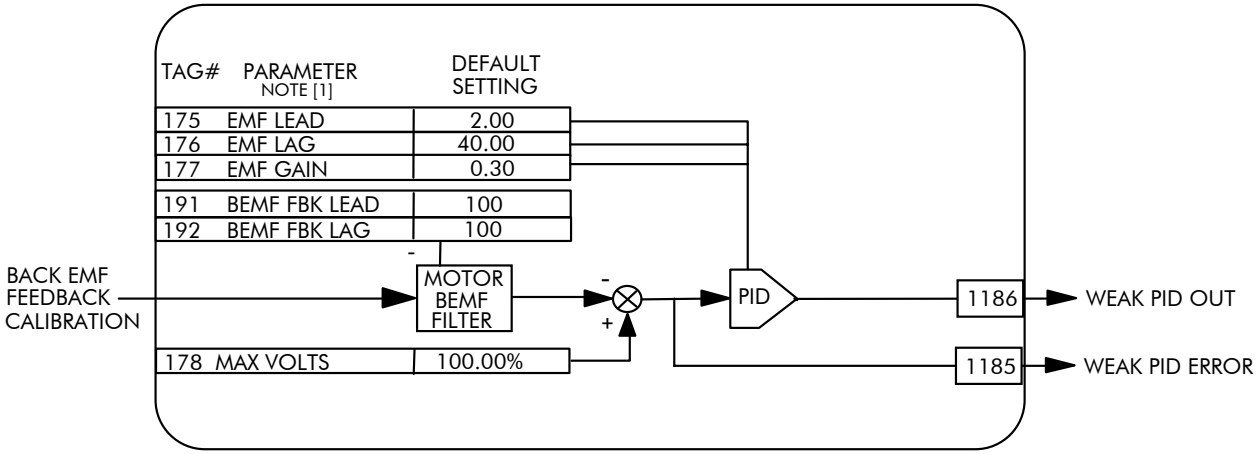

TAG#	PARAMETER NOTE [1]	DEFAULT SETTING
175	EMF LEAD	2.00
176	EMF LAG	40.00
177	EMF GAIN	0.30
191	BEMF FBK LEAD	100
192	BEMF FBK LAG	100
178	MAX VOLTS	100.00%

NOTE [1]
FIELD WEAKENING OPERATION REQUIRES ENCODER OR ANALOG TACH FEEDBACK

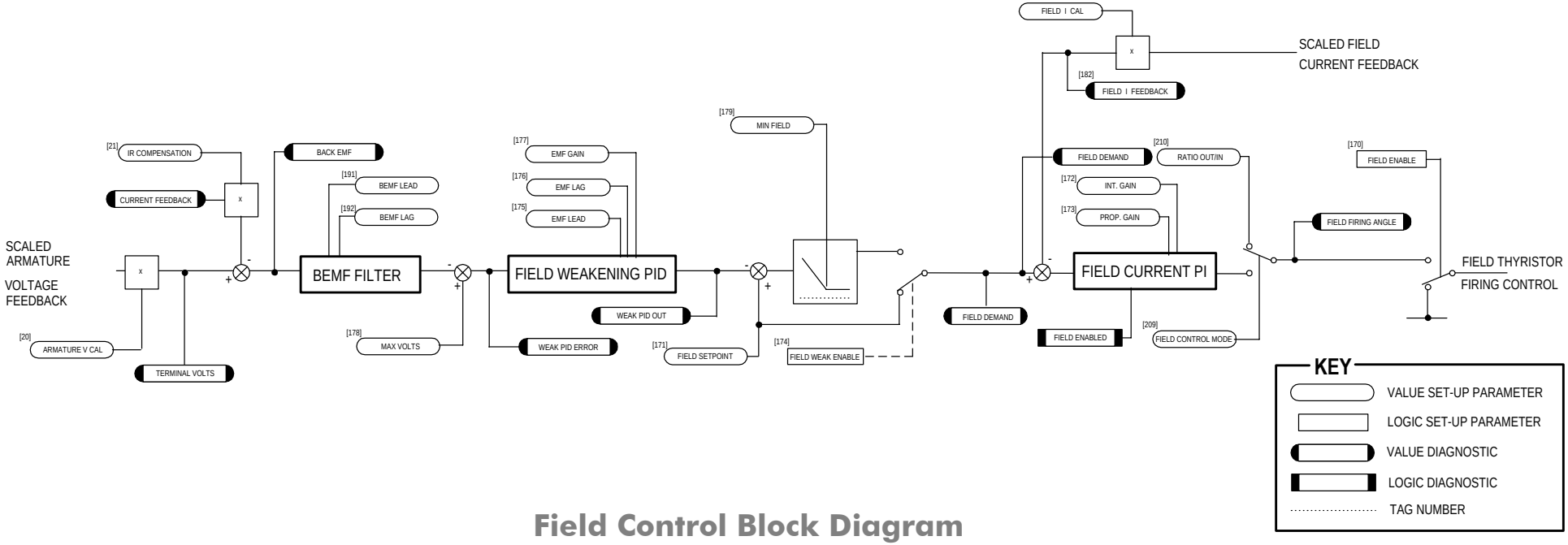

Field Control Block Diagram

INERTIA COMP

MMI Menu Map

1 SETUP PARAMETERS
2 SPEED LOOP
3 ADVANCED
4 INERTIA COMP
- INERTIA
- FILTER
- RATE CAL
- DELTA
- UNSCALED OUTPUT
- INERTIA COMP O/P

This function block directly compensates for load inertia during acceleration.

This is particularly useful in high accuracy applications such as positioning systems and elevators. The block calculates its output at the same rate as the current loop for maximum performance.

FUNCTION BLOCKS\MOTOR CONTROL\INERTIA COMP

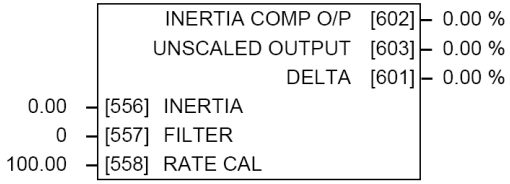

INERTIA COMP

Parameter	Tag	Range
INERTIA	**556**	**0.00 to 200.00**
The value of current necessary to accelerate load to 100% speed in 1 second.		
FILTER	**557**	**0 to 20000**
Low pass filter acting on the DELTA parameter.		
RATE CAL	**558**	**0.00 to 200.00**
Inertia compensation scaling factor.		
INERTIA COMP O/P	**602**	**—.xx %**
Inertia compensation directly added to the speed loop output.		
UNSCALED OUTPUT	**603**	**—.xx %**
Unscaled inertia compensation.		
DELTA	**601**	**—.xx %**
Rate of change of speed demand in %/s^2.		

Functional Description

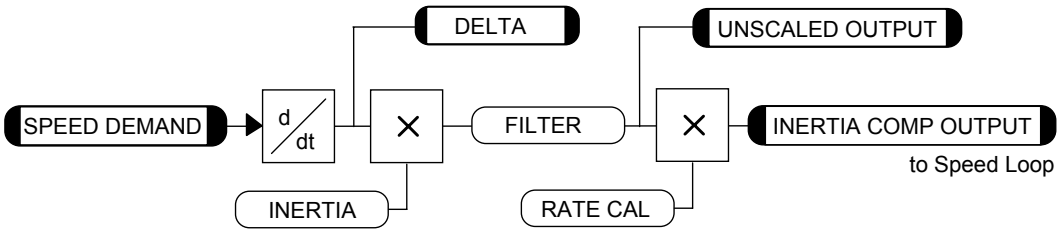

LINK

Use internal links to connect between function block parameters.

MMI Menu Map

1 FUNCTION BLOCKS
2 MISCELLANEOUS
3 LINK
4 LINK 1
4 LINK 80
- SOURCE TAG
- DESTINATION TAG

FUNCTION BLOCKS\MISCELLANEOUS\LINK\LINK1

0 – [364] SOURCE TAG
0 – [365] DESTINATION TAG

FUNCTION BLOCKS\MISCELLANEOUS\LINK\LINK80

0 – [778] SOURCE TAG
0 – [779] DESTINATION TAG

LINK

Parameter	Tag	Range
LINK 1 - 80		
SOURCE TAG	**Refer to Parameter Table**	**-1276 to 1276**
Enter the tag number of the source input value. Refer to “Making and Breaking Function Block Connections”, page D-2.		
DESTINATION TAG	**Refer to Parameter Table**	**0 to 1276**
Enter the tag number for the destination output value. Refer to “Making and Breaking Function Block Connections”, page D-2.		

INVERSE TIME

MMI Menu Map

1 DIAGNOSTICS
└ INVERSE TIME O/P

FUNCTION BLOCKS\MOTOR CONTROL\INVERSE TIME

INVERSE TIME [203] – 0.00 %

The purpose of the inverse time is to automatically reduce the current limit in response to prolonged overload conditions.

As the motor current exceeds an internal threshold of 103%, the excess current is integrated. The inverse time output remains unchanged until the integrated value is equivalent to an overload of 200% current for 60s. Once this limit is reached the integral value is clamped, and the inverse time output is decreased towards 103% at 10% per second.

Should the current drop below the 103% threshold the integrator value starts to discharge. As soon as the integrated value is less than the maximum overload level the inverse time output is allowed to ramp back up to 200% at a rate of 10% per second.

The inverse time output parameter is internally used by the current loop.

INVERSE TIME

Parameter	Tag	Range
INVERSE TIME	**203**	**—.xx %**
Inverse time clamp output level.		

JOG/SLACK

This block can be used to provide jog, take up slack and crawl speed functions.

The inputs to this block are the Start and Jog signals via the SEQUENCING function block, and the speed demand from the RAMPS function block. The output of this block is connected to the RAMPS function block.

The JOG/SLACK parameters modify or replace the ramp input speed demand. You should use a spare digital input to switch between modes to achieve full functionality.

The JOG/SLACK OUTPUT parameter is internally connected to the RAMPS function block. This output is the modified value of the speed demand as required by MODE, Start, and Jog. These settings are shown in the Setpoint Selection table.

MMI Menu Map

1 SETUP PARAMETERS
2 JOG/SLACK
- JOG SPEED 1
- JOG SPEED 2
- TAKE UP 1
- TAKE UP 2
- CRAWL SPEED
- MODE
- RAMP RATE

MMI Menu Map

1 FUNCTION BLOCKS
2 SEQ & REF
3 JOG/SLACK
- JOG/SLACK OUTPUT

FUNCTION BLOCKS\SEQ & REF\JOG/SLACK

		OPERATING MODE [212]	STOP
		JOG/SLACK OUTPUT [698]	0.00 %
5.00 %	–	[218] JOG SPEED 1	
-5.00 %	–	[219] JOG SPEED 2	
5.00 %	–	[253] TAKE UP 1	
-5.00 %	–	[254] TAKE UP 2	
10.00 %	–	[225] CRAWL SPEED	
FALSE	–	[228] MODE	
1.0 s	–	[355] RAMP RATE	

- ***Jog:*** With the Start signal OFF, the jog speed demand replaces the ramp input speed demand. MODE selects between jog setpoints 1 and 2. The jog RAMP RATE replaces the RAMP ACCEL TIME and RAMP DECEL TIME in the RAMPS function block. % S-RAMP is also set to 0.00%.
- ***Take Up Slack:*** With the Start signal ON, the jog signal performs a "take up slack" function. When a jog signal is received, the take up slack setpoint is added to the ramp input speed demand. MODE and Jog settings, from the table, select between the two take-up slack setpoints.
- ***Crawl:*** CRAWL SPEED replaces the ramp input speed demand as the output signal when both Start and Jog signals are ON, and MODE is TRUE.

JOG/SLACK

Parameter	Tag	Range
JOG SPEED 1 Jog speed setpoint 1.	**218**	**-100.00 to 100.00 %**
JOG SPEED 2 Jog speed setpoint 2.	**219**	**-100.00 to 100.00 %**
TAKE UP 1 Take-up slack speed setpoint 1.	**253**	**-100.00 to 100.00 %**
TAKE UP 2 Take-up slack speed setpoint 2.	**254**	**-100.00 to 100.00 %**
CRAWL SPEED Crawl speed setpoint.	**225**	**-100.00 to 100.00 %**
MODE Selects jog speed setpoints, take up setpoints, and the crawl setpoint. To achieve full functionality, connect MODE to a spare digital input.	**228**	**FALSE / TRUE**

JOG/SLACK

Parameter	Tag	Range
RAMP RATE	**355**	**0.1 to 600.0 s**
The ramp rate used while jogging. This is independent of the main ramp rate during normal running. The acceleration and deceleration times in jog are always equal.		
OPERATING MODE	**212**	**See below**
Refer to Chapter 6: "The Keypad" - The Keypad Menus (DIAGNOSTICS).		
0 : STOP 1 : STOP 2 : JOG SP. 1 3 : JOG SP. 2 4 : RUN 5 : TAKE UP SP. 1 6 : TAKE UP SP. 2 7 : CRAWL		
JOG/SLACK OUTPUT	**698**	**___.00 %**
The setpoint combined with the JOG / SLACK function.		

Functional Description

NOTE **The setpoint column in the table below refers to the Ramp Input ONLY, as indicated in the table. Any "direct" setpoints present will also add to this setpoint to make the total speed setpoint. If you don't want this to happen, for example during jogging, then disconnect the direct setpoint(s) during the appropriate conditions.**

Setpoint Selection Table

OPERATING MODE [212] - diagnostic		Start C3	Jog C4	MODE [228]	Ramp Input	Ramp Time	Contactor
0 : STOP		OFF	OFF	False	Setpoint	Default	OFF
1 : STOP		OFF	OFF	True	Setpoint	Default	OFF
2 : JOG SP. 1	(inch/jog 1)	OFF	ON	False	JOG SPEED 1	RAMP RATE	ON
3 : JOG SP. 2	(inch/jog 2)	OFF	ON	True	JOG SPEED 2	RAMP RATE	ON
4 : RUN		ON	OFF	False	Setpoint	Default	ON
5 : TAKE UP SP. 1	(take-up slack 1)	ON *	ON *	False	Setpoint + TAKE UP 1	Default	ON
6 : TAKE UP SP. 2	(take-up slack 2)	ON	OFF	True	Setpoint + TAKE UP 2	Default	ON
7 : CRAWL		ON *	ON *	True	CRAWL SPEED	Default	ON

* Start (C3) and Jog (C4) must be applied (ON) simultaneously in the cases of TAKE UP SP.1 and CRAWL.

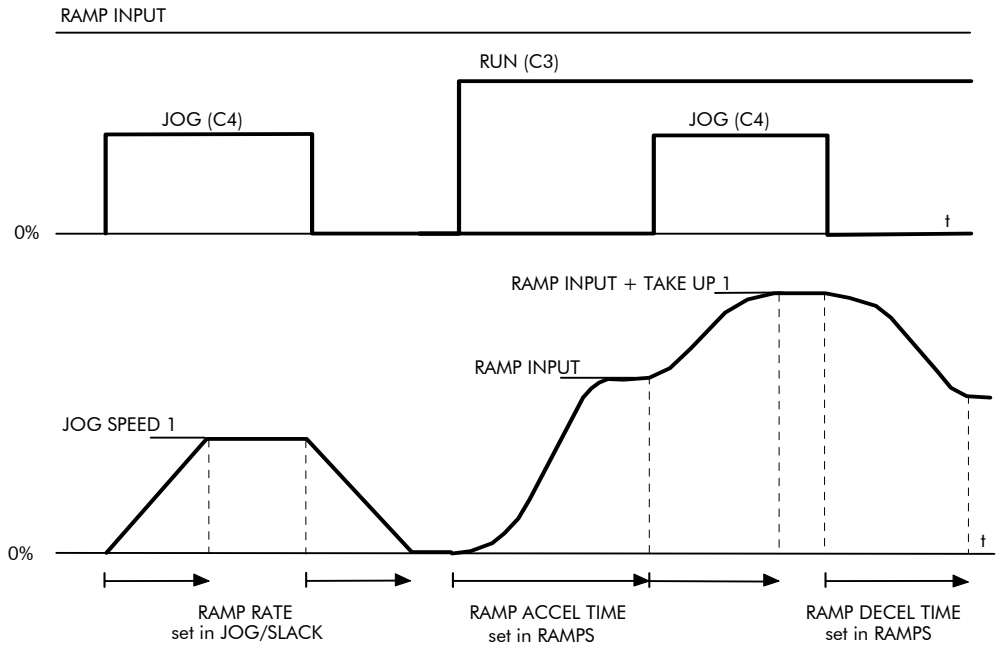

Block Diagram

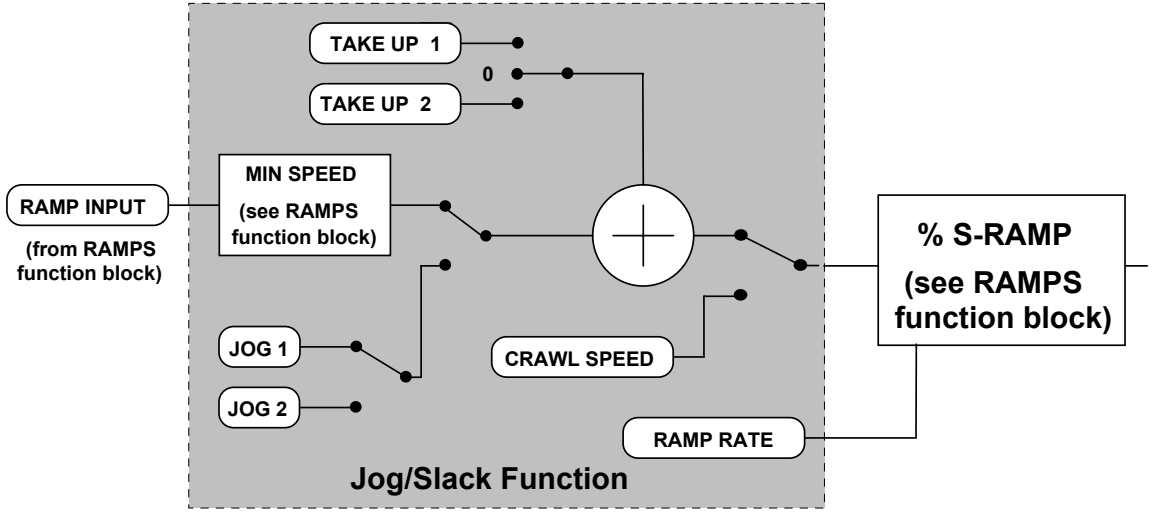

LOGIC FUNC

MMI Menu Map

1 FUNCTION BLOCKS
2 MISCELLANEOUS
3 LOGIC FUNC
4 LOGIC FUNC 1
4 LOGIC FUNC 2
4 LOGIC FUNC 3
4 LOGIC FUNC 4
4 LOGIC FUNC 5
4 LOGIC FUNC 6
4 LOGIC FUNC 7
4 LOGIC FUNC 8
4 LOGIC FUNC 9
4 LOGIC FUNC 10
- INPUT A
- INPUT B
- INPUT C
- TYPE
- OUTPUT

These generic function blocks can be configured to perform one of a number of simple functions upon a fixed number of inputs.

FUNCTION BLOCKS\MISCELLANEOUS\LOGIC FUNC\LOGIC FUNC 1

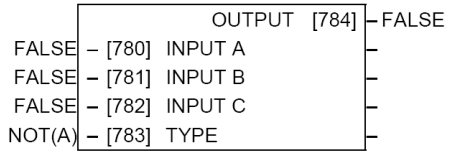

FUNCTION BLOCKS\MISCELLANEOUS\LOGIC FUNC\LOGIC FUNC 2

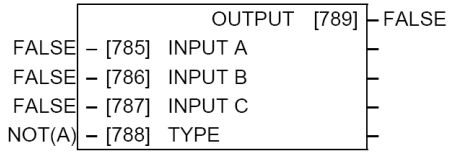

FUNCTION BLOCKS\MISCELLANEOUS\LOGIC FUNC\LOGIC FUNC 3

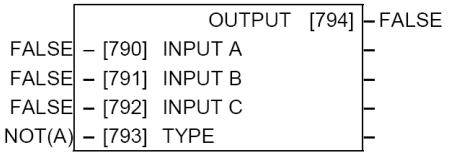

FUNCTION BLOCKS\MISCELLANEOUS\LOGIC FUNC\LOGIC FUNC 4

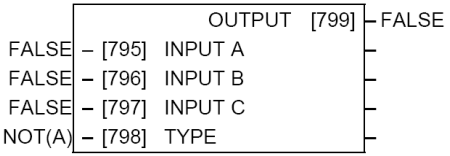

FUNCTION BLOCKS\MISCELLANEOUS\LOGIC FUNC\LOGIC FUNC 5

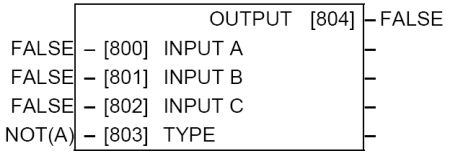

FUNCTION BLOCKS\MISCELLANEOUS\LOGIC FUNC\LOGIC FUNC 6

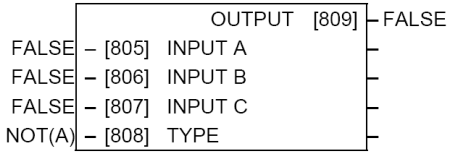

FUNCTION BLOCKS\MISCELLANEOUS\LOGIC FUNC\LOGIC FUNC 7

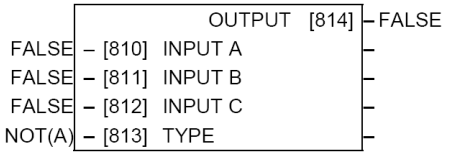

FUNCTION BLOCKS\MISCELLANEOUS\LOGIC FUNC\LOGIC FUNC 8

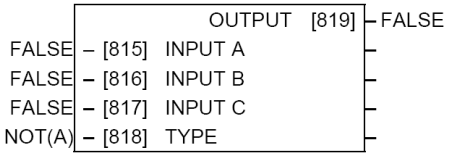

FUNCTION BLOCKS\MISCELLANEOUS\LOGIC FUNC\LOGIC FUNC 9

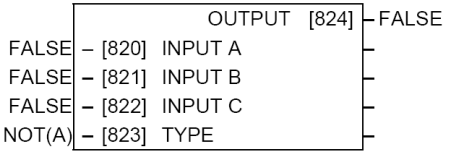

FUNCTION BLOCKS\MISCELLANEOUS\LOGIC FUNC\LOGIC FUNC 10

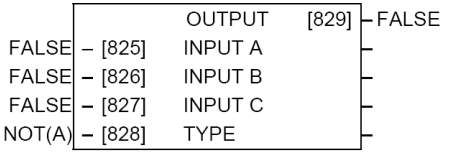

LOGIC FUNC

Parameter	Tag	Range
INPUT A General purpose logic input.	**780, 785, 790, 795, 800, 805, 810, 815, 820, 825**	**FALSE / TRUE**
INPUT B General purpose logic input.	**781, 786, 791, 796, 801, 806, 811, 816, 821, 826**	**FALSE / TRUE**
INPUT C General purpose logic input.	**782, 787, 792, 797, 802, 807, 812, 817, 822, 827**	**FALSE / TRUE**
TYPE The operation to be performed on the three inputs to produce the output value. The operations that can be selected are: 0: NOT(A) 1: AND(A,B,C) 2: NAND(A,B,C) 3: OR(A,B,C) 4: NOR(A,B,C) 5: XOR(A,B) 6: 0-1 EDGE(A) 7: 1-0 EDGE(A) 8: AND(A,B,!C) 9: OR(A,B,!C) 10: S FLIP-FLOP 11: R FLIP-FLOP 12: LATCH 13: SWITCH 14: (A AND B) OR C 15: (A OR B) AND C	**783, 788, 793, 798, 803, 808, 813, 818, 823, 828**	**See below**
OUTPUT The result of performing the selected operation on the inputs.	**784, 789, 794, 799, 804, 809, 814, 819, 824, 829**	**FALSE / TRUE**

Functional Description

Operation	Description	
NOT(A)	NOT(A) 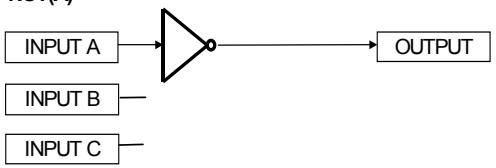	If INPUT A is TRUE the OUTPUT is FALSE, otherwise the OUTPUT is TRUE.
AND(A,B,C)	AND(A,B,C) 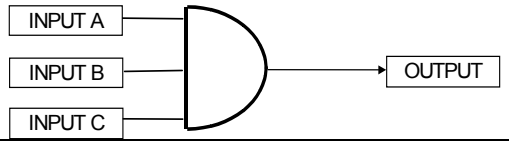	If A and B and C are all TRUE then the OUTPUT is TRUE, otherwise the OUTPUT is FALSE.
NAND(A,B,C)	NAND(A,B,C) 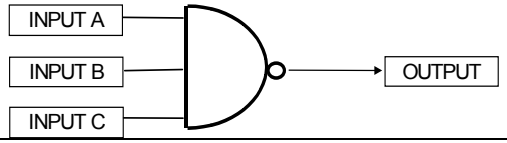	If A and B and C are all TRUE then the OUTPUT is FALSE, otherwise the OUTPUT is TRUE.
OR(A,B,C)	OR(A,B,C) 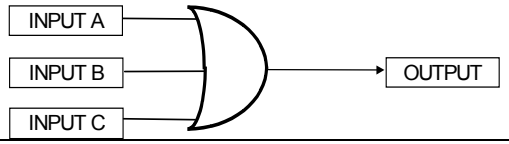	If at least one of A or B or C is TRUE then the OUTPUT is TRUE, otherwise the OUTPUT is FALSE.
NOR(A,B,C)	NOR(A,B,C) 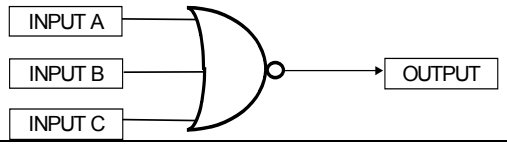	If at least one of A or B or C is TRUE then the OUTPUT is FALSE, otherwise the OUTPUT is TRUE.
XOR(A,B)	XOR(A,B) 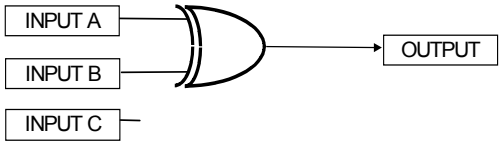	If A and B are the same, (both TRUE or both FALSE), then the output is FALSE, otherwise the output is TRUE.

Operation	Description
0-1 EDGE(A)	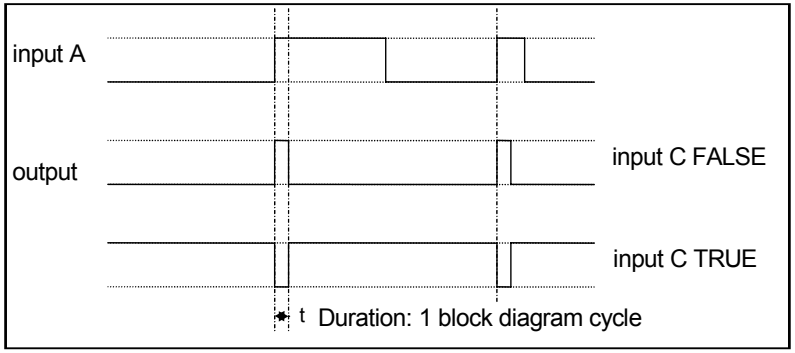 **Rising Edge Trigger** Input B is not used. This function outputs a pulse of 5ms duration when INPUT A to the block becomes TRUE. When INPUT C is TRUE, the output is inverted. The output is held TRUE for one execution of the function block diagram.
1-0 EDGE(A)	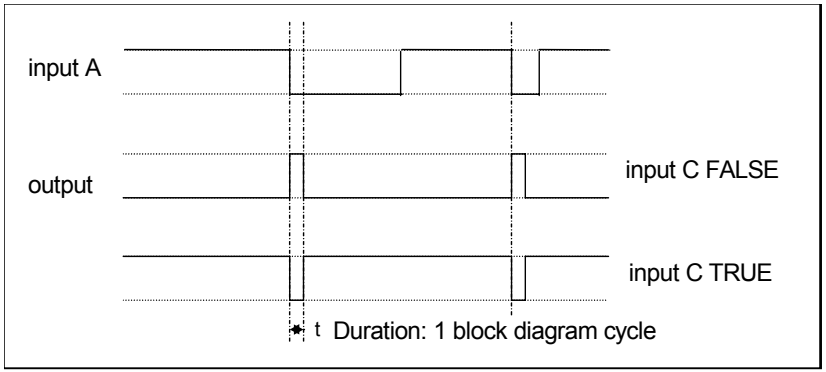 **Falling Edge Trigger** Input B is not used. This function outputs a pulse of 20ms duration when INPUT A to the block becomes FALSE. When INPUT C is TRUE, the output is inverted. The output is held TRUE for one execution of the function block diagram.

Operation	Description
AND(A,B,!C)	**AND(A,B,!C)** 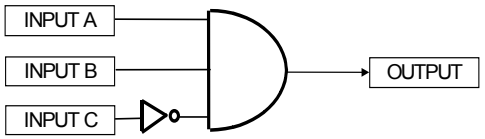 Refer to the Truth Table. FALSE = 0, TRUE = 1. **Input State** **A B C Output State** 0 0 0 **0** 0 0 1 **0** 0 1 0 **0** 0 1 1 **0** 1 0 0 **0** 1 0 1 **0** 1 1 0 **1** 1 1 1 **0**
OR(A,B,!C)	**OR(A,B,!C)** 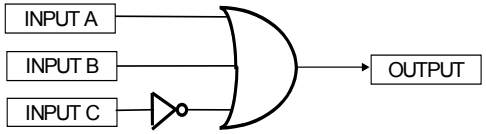 Refer to the Truth Table. FALSE = 0, TRUE = 1. **Input State** **A B C Output State** 0 0 0 **1** 0 0 1 **0** 0 1 0 **1** 0 1 1 **1** 1 0 0 **1** 1 0 1 **1** 1 1 0 **1** 1 1 1 **1**
S FLIP-FLOP	**S FLIP-FLOP** 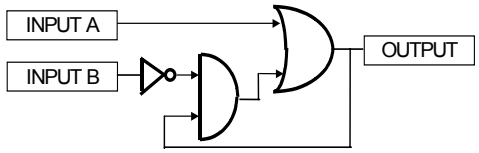 This is a set dominant flip-flop. INPUT A functions as *set,* and INPUT B as *reset* .

Operation	Description	
R FLIP-FLOP	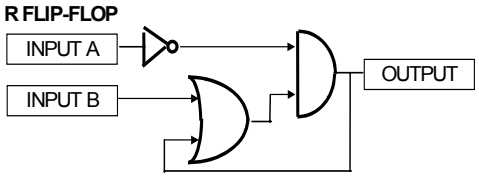	This is a reset dominant flip-flop. INPUT A functions as *reset,* and INPUT B as *set* .
LATCH	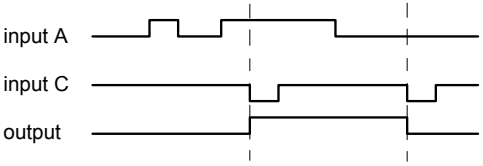	When INPUT C is low, the output is the value of INPUT A. This output value is then latched until INPUT C is low again. INPUT B is not used.
SWITCH	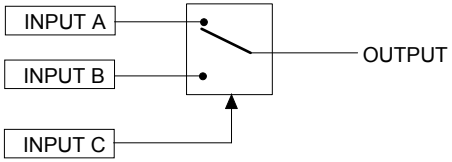	When INPUT C is FALSE, the output is equal to INPUT A. When INPUT C is TRUE, the output is equal to INPUT B.

MENUS

MMI Menu Map

1 MENUS
- VIEW LEVEL
- LANGUAGE
- ENTER PASSWORD
- CHANGE PASSWORD

Use this block to select one of three MMI menu structures, to set a display language, and to protect the Keypad with a password.

FUNCTION BLOCKS\MENUS\MENUS

STANDARD	[37]	VIEW LEVEL
ENGLISH	[304]	LANGUAGE
0x0000	[120]	ENTER PASSWORD
0x0000	[121]	CHANGE PASSWORD

MENUS

Parameter	Tag	Range
VIEW LEVEL	**37**	**BASIC / STANDARD / ADVANCED**
This parameter controls which parameters and menus are visible on the MMI. Refer to Chapter 6: "The Keypad" -The Menu System Map to see the effects of these selections.		
LANGUAGE	**304**	**ENGLISH / OTHER**
Selects the MMI display language. Other languages are available, please contact Parker SSD Drives. Refer also to Chapter 6: “The Keypad” - Selecting the Display Language.		
ENTER PASSWORD	**120**	**0x0000 to 0xFFFF**
Refer to Chapter 6: “The Keypad” - Password Protection for further instruction.		
CHANGE PASSWORD	**121**	**0x0000 to 0xFFFF**
Refer to Chapter 6: “The Keypad” - Password Protection for further instruction.		

MIN SPEED

MMI Menu Map

1 FUNCTION BLOCKS
2 SETPOINT FUNCTIONS
3 MIN SPEED
OUTPUT

The Min Speed function block may be used to prevent the drive running with a zero setpoint.

FUNCTION BLOCKS\SETPOINT FUNCS\MIN SPEED

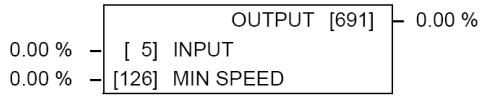

MIN SPEED

MMI Menu Map

1 SETUP PARAMETERS
2 RAMPS
INPUT
MIN SPEED

Parameter	Tag	Range
INPUT	**5**	**-105.00 to 105.00 %**
Input value.		
MIN SPEED	**126**	**0.00 to 100.00 %**
The minimum speed clamp is fully bi-directional and operates with a 0.5% hysterisis. If this parameter is less than 0.5% it is ignored and OUTPUT = INPUT.		

Minimum Speed

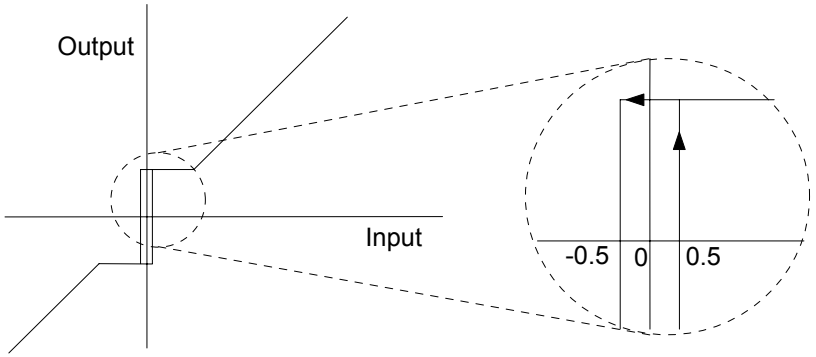

OUTPUT	**691**	**—.xx %**
Clamped value of input.		

miniLINK

MMI Menu Map

1 SYSTEM

2 miniLINK

- VALUE 1
- VALUE 2
- VALUE 3
- VALUE 4
- VALUE 5
- VALUE 6
- VALUE 7
- VALUE 8
- VALUE 9
- VALUE 10
- VALUE 11
- VALUE 12
- VALUE 13
- VALUE 14
- LOGIC 1
- LOGIC 2
- LOGIC 3
- LOGIC 4
- LOGIC 5
- LOGIC 6
- LOGIC 7
- LOGIC 8

These parameters are general purpose tags.

These parameters are used extensively in conjunction with communications masters in order to map the field bus parameters into the drive. Refer to the appropriate Tech Box manual.

FUNCTION BLOCKS\COMMUNICATIONS\miniLINK

0.00 %	–	[339]	VALUE 1
0.00 %	–	[340]	VALUE 2
0.00 %	–	[341]	VALUE 3
0.00 %	–	[342]	VALUE 4
0.00 %	–	[343]	VALUE 5
0.00 %	–	[344]	VALUE 6
0.00 %	–	[345]	VALUE 7
0.00 %	–	[379]	VALUE 8
0.00 %	–	[380]	VALUE 9
0.00 %	–	[381]	VALUE 10
0.00 %	–	[382]	VALUE 11
0.00 %	–	[383]	VALUE 12
0.00 %	–	[384]	VALUE 13
0.00 %	–	[385]	VALUE 14
OFF	–	[346]	LOGIC 1
OFF	–	[347]	LOGIC 2
OFF	–	[348]	LOGIC 3
OFF	–	[349]	LOGIC 4
OFF	–	[350]	LOGIC 5
OFF	–	[351]	LOGIC 6
OFF	–	[352]	LOGIC 7
OFF	–	[353]	LOGIC 8

miniLINK

Parameter	Tag	Range
VALUE 1 to VALUE 14 General purpose inputs.	**339 to 385**	**-300.00 to 300.00 %**
LOGIC 1 to LOGIC 8 General purpose logic inputs.	**346 to 353**	**OFF / ON**

MULTIPLEXER

MMI Menu Map

1 FUNCTION BLOCKS
2 MISCELLANEOUS
3 MULTIPLEXER
- INPUT 0
- INPUT 1
- INPUT 2
- INPUT 3
- INPUT 4
- INPUT 5
- INPUT 6
- INPUT 7
- INPUT 8
- INPUT 9
- INPUT 10
- INPUT 11
- INPUT 12
- INPUT 13
- INPUT 14
- INPUT 15
- OUTPUT

Each block collects together 16 Boolean input values into a single word.

For example, one may be used to collect individual bits within a word for efficient access from a communications master.

FUNCTION BLOCKS\MISCELLANEOUS\MULITPLEXER

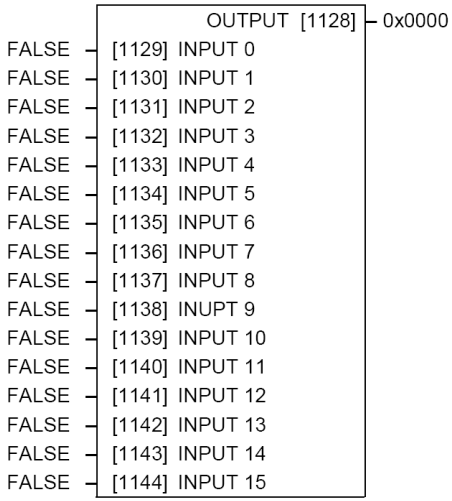

MULTIPLEXER

Parameter	Tag	Range
INPUT 0 to INPUT 15	**1129 to 1144**	**FALSE / TRUE**
The Boolean inputs to be assembled into a single word.		
OUTPUT	**1128**	**0x0000 to 0xFFFF**
The resulting word.		

OP STATION

MMI Set-up options and Local setpoint information.

MMI Menu Map

1 SETUP PARAMETERS
2 OP-STATION
3 SET UP
- SETPOINT
- JOG SETPOINT
- LOCAL KEY ENABLE

FUNCTION BLOCKS\MENUS\OP-STATION

TRUE	[511]	LOCAL KEY ENABLE
0.00 %	[512]	SETPOINT
5.00 %	[513]	JOG SETPOINT
10.0 s	[514]	RAMP ACCEL TIME
10.0 s	[515]	RAMP DECEL TIME
FORWARD	[516]	INITIAL DIR
REMOTE	[517]	INITIAL MODE
LOCAL	[518]	INITIAL VIEW
0.00 %	[519]	INITIAL SETPOINT
5.00 %	[520]	INITIAL JOG

MMI Menu Map

1 SETUP PARAMETERS
2 OP-STATION
3 START UP VALUES
- INITIAL SETPOINT
- INITIAL JOG
- INITIAL DIRECTION
- INITIAL VIEW
- INITIAL MODE

MMI Menu Map

1 SETUP PARAMETERS
2 OP-STATION
3 LOCAL RAMP
- RAMP ACCEL TIME
- RAMP DECEL TIME

OP STATION

Parameter	Tag	Range
LOCAL KEY ENABLE	**511**	**FALSE / TRUE**
Enables the LOCAL/REMOTE control key on the op-station. Set to TRUE to allow the operator to toggle between local and remote modes.		
SETPOINT	**512**	**0.00 to 100.00 %**
SET UP menu - Actual value of local setpoint. This value is not persistent.		
JOG SETPOINT	**513**	**0.00 to 100.00 %**
SET UP menu - Actual value of local jog setpoint. This value is not persistent.		
RAMP ACCEL TIME	**514**	**0.1 to 600.0 s**
Acceleration time used while in Local mode.		
RAMP DECEL TIME	**515**	**0.1 to 600.0 s**
Deceleration time used while in Local mode.		
INITIAL DIR	**516**	**REVERSE / FORWARD**
START UP VALUES menu - Start-up mode of local direction on power-up. Set to TRUE for Forward.		
INITIAL MODE	**517**	**REMOTE / LOCAL**
START UP VALUES menu - Start-up mode of Keypad LOCAL/REMOTE control key on power-up. Set to TRUE for Local mode.		
INITIAL VIEW	**518**	**LOCAL / PROGRAM**
START UP VALUES menu - Start-up mode of Keypad PROG key on power-up. Set to TRUE for Program mode to see the local setpoint.		

OP STATION

Parameter	Tag	Range
INITIAL SETPOINT	**519**	**0.00 to 100.00 %**
START UP VALUES menu - Default value of local setpoint on power-up.		
INITIAL JOG	**520**	**0.00 to 100.00 %**
START UP VALUES menu - Default Value of local jog setpoint on power up.		

Functional Description

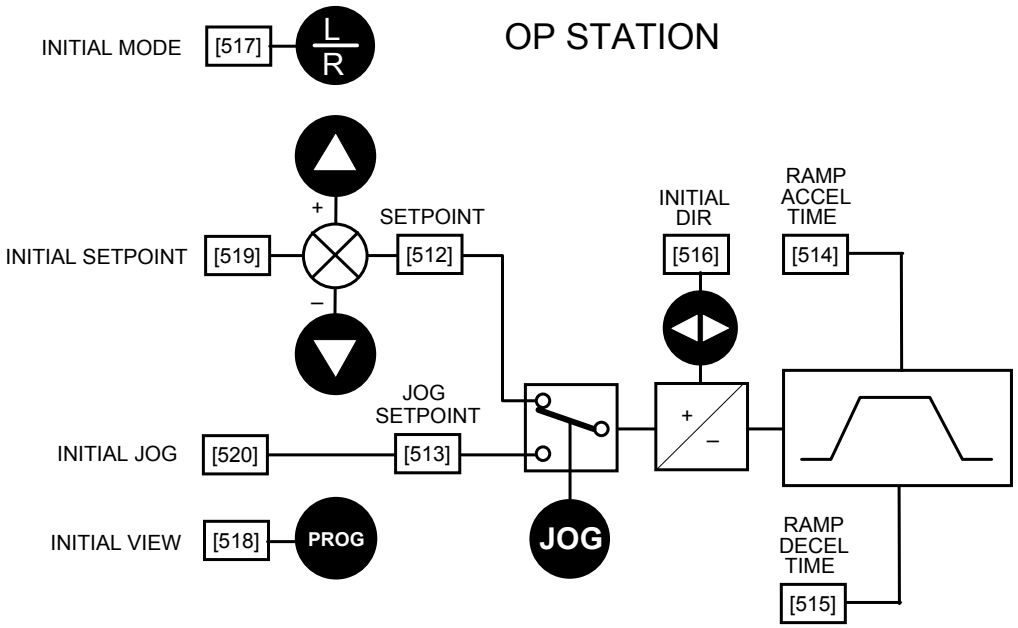

Local Setpoint (only active when the drive is in Local mode)

PID

This is a general purpose PID block which can be used for many different closed loop control applications.

The PID feedback can be loadcell tension, dancer position or any other transducer feedback such as pressure, flow etc.

This block is ignored by the drive unless SYSTEM::CONFIGURE I/O::BLOCK DIAGRAM::PID O/P DEST is connected to a non-zero tag.

Features:

- Independent adjustment of gain and time constants.
- Additional first-order filter (F).
- Functions P, PI, PD, PID with/without F individually selected.
- Ratio and divider for scaling each input.
- Independent positive and negative limits.
- Output scaler (Trim).
- Gain profiled by diameter for centre-driven winder control.

MMI Menu Map

1 SETUP PARAMETERS
2 SPECIAL BLOCKS
3 PID
- PROP. GAIN
- INT.TIME.CONST
- DERIVATIVE TC
- POSITIVE LIMIT
- NEGATIVE LIMIT
- O/P SCALER(TRIM)
- INPUT 1
- INPUT 2
- RATIO 1
- RATIO 2
- DIVIDER 1
- DIVIDER 2
- ENABLE
- INT. DEFEAT
- FILTER T.C.

MMI Menu Map

1 DIAGNOSTICS
- PID OUTPUT
- PID CLAMPED
- PID ERROR

MMI Menu Map

1 FUNCTION BLOCKS
- HI RES PROP GAIN

FUNCTION BLOCKS\SETPOINT FUNCS\PID

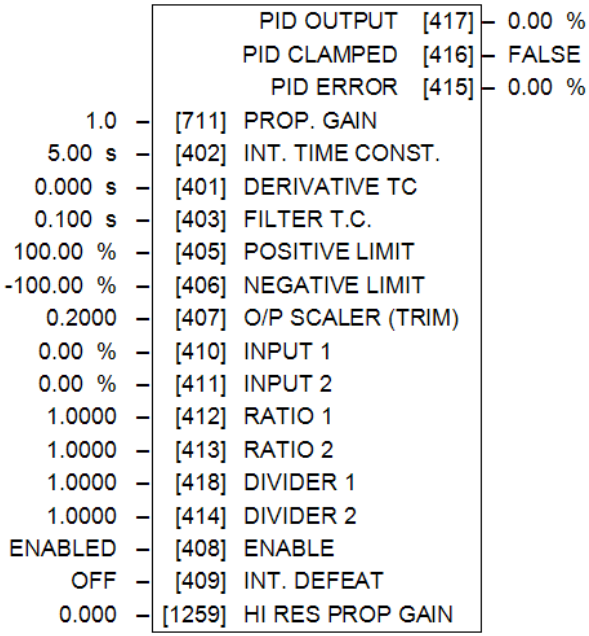

PID

Parameter	Tag	Range
PROP. GAIN	**711**	**0.0 to 100.0**
The maximum limit of the proportional gain. This is a pure gain factor which shifts up or down the whole Bode PID transfer function leaving the time constants unaffected. A value of P = 10.0 means that, for an error of 5%, the proportional part (initial step) of the PID output will be: 10 x [1 + (Td/Ti)] x 5 %, i.e. approx. 50% for Td << Ti. Also refer to HI RES PROP GAIN below.		
INT. TIME CONST.	**402**	**0.01 to 100.00 s**
The integral time constant (Ti)		
DERIVATIVE TC	**401**	**0.000 to 10.000 s**
The derivative time constant (Td). Set this value to 0.000 to remove the derivative term.		
FILTER T.C.	**403**	**0.000 to 10.000 s**
A first-order filter for removing high frequency noise from the PID output. When set to 0.000 the filter is removed. The high frequency lift of the transfer function is determined by the ratio k of the Derivative Time Const (Td) over the Filter Time Constant (Tf) - typically 4 of 5.		

PID

Parameter	Tag	Range
POSITIVE LIMIT The upper limit of the PID algorithm.	**405**	**0.00 to 105.00 %**
NEGATIVE LIMIT The lower limit of the PID algorithm.	**406**	**-105.00 to 0.00 %**
O/P SCALER (TRIM) The ratio that the limited PID output is multiplied by in order to give the final PID Output. Normally this ratio would be between 0 and 1.	**407**	**-3.0000 to 3.0000**
INPUT 1 PID setpoint input. This can be either a position/tension feedback or a reference/offset.	**410**	**-300.00 to 300.00 %**
INPUT 2 PID feedback input. This can be either a position/tension feedback or a reference/offset	**411**	**-300.00 to 300.00 %**
RATIO 1 This multiplies Input 1 by a factor (Ratio 1).	**412**	**-3.0000 to 3.0000**
RATIO 2 This multiplies Input 2 by a factor (Ratio 2).	**413**	**-3.0000 to 3.0000**
DIVIDER 1 This divides Input 1 by a factor (Divider 1).	**418**	**-3.0000 to 3.0000**
DIVIDER 2 This divides Input 2 by a factor (Divider 2).	**414**	**-3.0000 to 3.0000**
ENABLE Enables or disables the PID output.	**408**	**DISABLED / ENABLED**
INT. DEFEAT When ON, the Integral term is disabled. The block transfer function then becomes P+D only.	**409**	**OFF / ON**
HI RES PROP GAIN Additive, high resolution, proportional term gain. This value is added to PROP GAIN to form the total proportional term gain. Its default value is 0.000 (unused).	**1259**	**0.000 to 100.000**
PID OUTPUT *Refer to Chapter 6: "The Keypad" - The Keypad Menus (DIAGNOSTICS).*	**417**	**—.xx %**
PID CLAMPED *Refer to Chapter 6: "The Keypad" - The Keypad Menus (DIAGNOSTICS).*	**416**	**FALSE / TRUE**
PID ERROR *Refer to Chapter 6: "The Keypad" - The Keypad Menus (DIAGNOSTICS).*	**415**	**—.xx %**

Functional Description

The following block diagram shows the internal structure of the PID block.

PID is used to control the response of any closed loop system. It is used specifically in system applications involving the control of drives to allow zero steady state error between Reference and Feedback, together with good transient performance.

The block executes a Proportional Gain + Integral + Derivative control algorithm, with an added filter to attenuate high-frequency noise. You can select P, PD, PI or PID as required.

Proportional Gain (PROP. GAIN)
This is used to adjust the basic response of the closed loop control system. It is defined as the portion of the loop gain fed back to make the complete control loop stable. The PID error is multiplied by the Proportional Gain to produce an output.

Integral (INT. TIME CONST.)
The Integral term is used to give zero steady state error between the setpoint and feedback values of the PID. If the integral is set to a small value, this will cause an underdamped or unstable control system.

Derivative (DERIVATIVE TC)
This is used to correct for certain types of control loop instability, and therefore improve response. It is sometimes used when heavy or large inertia rolls are being controlled. The derivative term has an associated filter to suppress high frequency signals.

Critically Damped Response

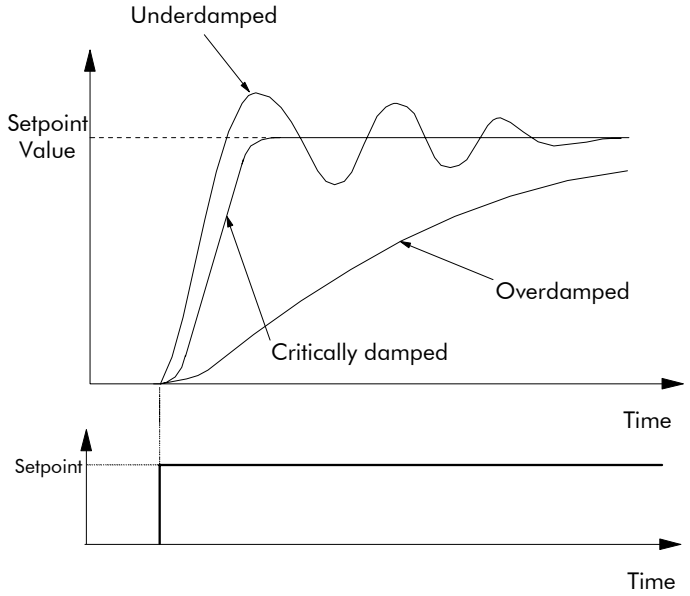

The algorithm modifies the error between the setpoint and the feedback with the proportional, integral, and derivative terms. The error is clamped internally to ±105% maximum.

The proportional, integral, and derivative terms are scaled by PROP. GAIN, INT. TIME CONST., and DERIVATIVE TC respectively. An additional gain profiler can modify the proportional gain as the roll diameter changes. The block diagram shows how the proportional gain changes when using the profiler.

Proportional Gain

Proportional gain scales the output based upon the input error. Increasing PROP. GAIN will improve the response time while increasing overshoot. MODE selects the proportional gain profile. When set to 0, the proportional gain remains constant over the entire roll. Changing the value of MODE increases the profile as shown opposite.

You should try to achieve a critically damped response which allows the mechanics to track as precisely as possible a step change on the setpoint.

Integral Gain

Integral eliminates steady-state error. Reducing INT. TIME CONST. improves the response, however, if it is set too short it will cause instability. The integral value is clamped internally by the settings of POSITIVE LIMIT and NEGATIVE LIMIT. It is also held at the last value when the PID CLAMPED output is TRUE. Setting INT. DEFEAT to ON will disable the integral gain term.

Derivative Gain

Derivative gain instantaneously boosts the PID output signal. Increasing DERIVATIVE TC decreases the damping, which in most cases causes overshoot and oscillations resulting in an unacceptable system response.

NOTE **For most applications, derivative gain is never used and is usually left at its default value of 0.000 seconds.**

Derivative gain can improve response in some dancer tension controlled systems, particularly those systems with high inertia dancers which need an instantaneous response to overcome the weight of the dancer roll. For loadcell controlled tension systems, derivative gain is almost *never* used.

- In underdamped systems, the output oscillates and the settling time increases.
- Critically damped systems have no overshoot or oscillations. They reach the setpoint within the desired response time.
- Overdamped systems do not oscillate but do not reach the setpoint within the desired response time.

NOTE **The EMULATE 590P parameter in the CONFIGURE DRIVE function block affects the time constants used in the PID. If this parameter is non-zero, the filter, integral and derivative time constants used within the PID are four times greater than those shown on the input parameters. This emulates the behaviour of earlier versions of the 590P.**

Block Diagram

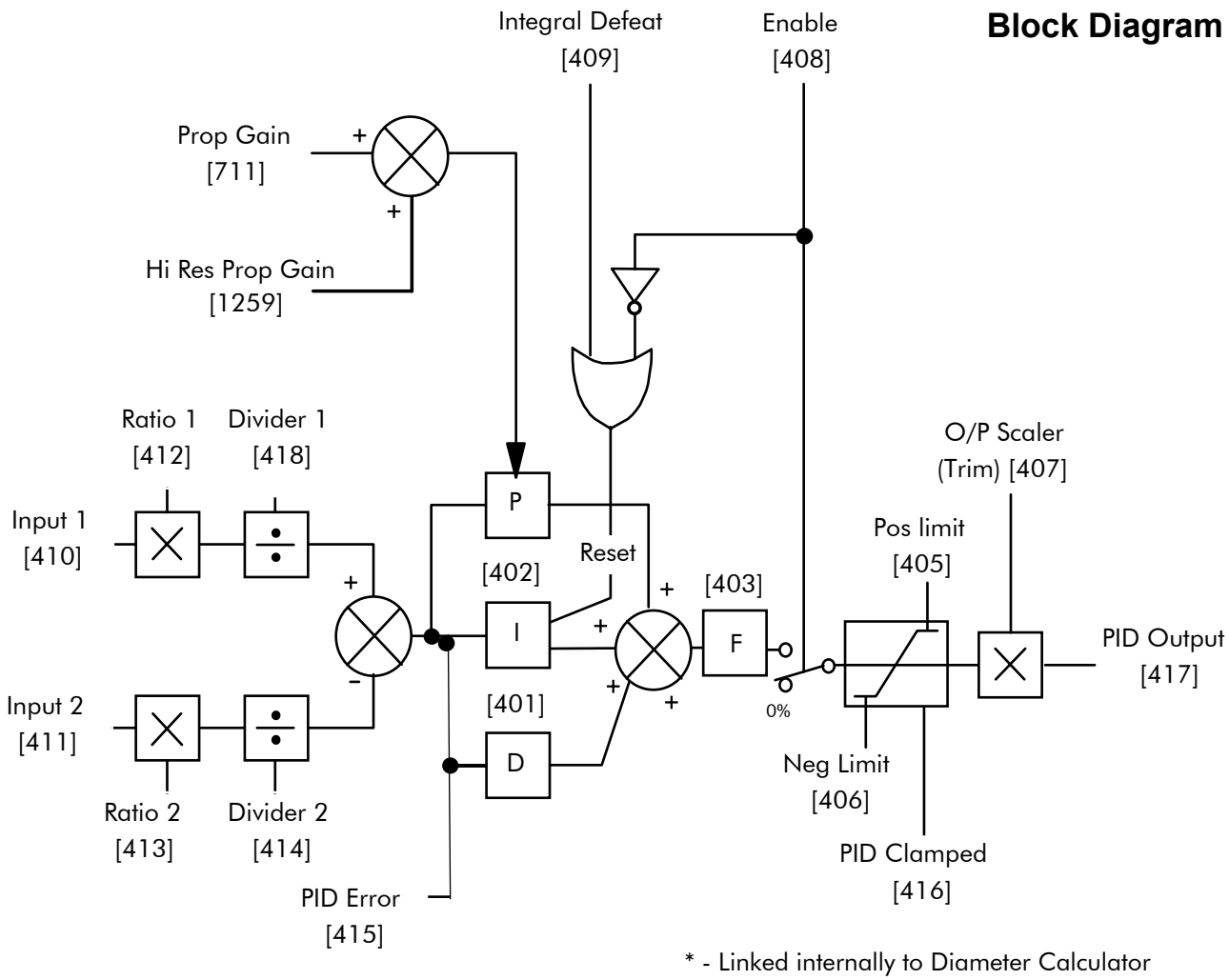

Operators can read the PID error, PID output, setpoint and feedback on the drive's MMI by monitoring the following values:

- PID ERROR : displayed in the DIAGNOSTICS menu
- PID OUTPUT : displayed in the DIAGNOSTICS menu
- SETPOINT : monitored at SETUP PARAMETERS::SPECIAL BLOCKS::PID::INPUT 1
- FEEDBACK : monitored at SETUP PARAMETERS::SPECIAL BLOCKS::PID::INPUT 2

PLL (PHASE LOCKED LOOP)

MMI Menu Map

1 FUNCTION BLOCKS
2 MOTOR CONTROL
3 PLL
- PLL STATE
- PHASE ERROR
- PLL MAINS FREQ

The phase locked loop function block allows the drive to ride through short disturbances to the supply voltage, frequency or phase and provides immunity to waveform distortion.

FUNCTION BLOCKS\MOTOR CONTROL\PLL

PLL STATE	[1198]	–	STOPPED
PHASE ERROR	[1199]	–	0.00
PLL MAINS FREQ	[1201]	–	0.00

PLL (PHASE LOCKED LOOP)

Parameter	Tag	Range
PLL STATE	**1198**	**See below**

Indicates the current operating state of the phase locked loop function block. Normally the PLL will reside in the LOCKED state after close of the 3-phase line contactor. The FAIL state results if the supply frequency moves beyond the acceptable operating range.

0 : STOPPED
1 : 1ST CODING EDGE
2 : READ EDGES
3 : MAINS PERIOD
4 : LOCKED
5 : UNLOCKED
6 : FAIL

PHASE ERROR	**1199**	**—.xx**

The instantaneous angle error between the zero-crossing detection of the line supply and the reference output from the PLL function block.

PLL MAINS FREQ	**1201**	**—.xx**

The measured 3-phase line supply frequency at the output of the PLL function block.

PNO CONFIG

MMI Menu Map

1 SERIAL LINKS

2 PNO CONFIG
- PNO 112
- PNO 113
- PNO 114
- PNO 115
- PNO 116
- PNO 117
- PNO 118
- PNO 119
- PNO 120
- PNO 121
- PNO 122
- PNO 123
- PNO 124
- PNO 125
- PNO 126
- PNO 127

The PNO parameters are used in conjunction with the EI ASCII and EI BINARY communications protocols.

Refer to Appendix A: "Serial Communications".

FUNCTION BLOCKS\COMMUNICATIONS\PNO CONFIG

0	–	[312]	PNO 112
0	–	[313]	PNO 113
0	–	[314]	PNO 114
0	–	[315]	PNO 115
0	–	[316]	PNO 116
0	–	[317]	PNO 117
0	–	[318]	PNO 118
0	–	[319]	PNO 119
379	–	[320]	PNO 120
380	–	[321]	PNO 121
381	–	[322]	PNO 122
382	–	[323]	PNO 123
383	–	[324]	PNO 124
384	–	[325]	PNO 125
385	–	[326]	PNO 126
0	–	[327]	PNO 127

PNO CONFIG

Parameter	Tag	Range
PNO 112 - 127	**312 to 327**	**-1276 to 1276**

Indirect access parameters.

PRESET SPEEDS

MMI Menu Map

1 SETUP PARAMETERS

2 PRESET SPEEDS

- SELECT 1
- SELECT 2
- SELECT 3
- INVERT O/P
- MAX SPEED
- LIMIT
- GRAY SCALE
- INPUT 0
- INPUT 1
- INPUT 2
- INPUT 3
- INPUT 4
- INPUT 5
- INPUT 6
- INPUT 7
- PRESET O/P
- OUTPUT

The Preset Speeds block allows you to select one of eight preset inputs, which in turn may be connected to other blocks of inputs.

FUNCTION BLOCKS\SETPOINT FUNCS\PRESET SPEEDS

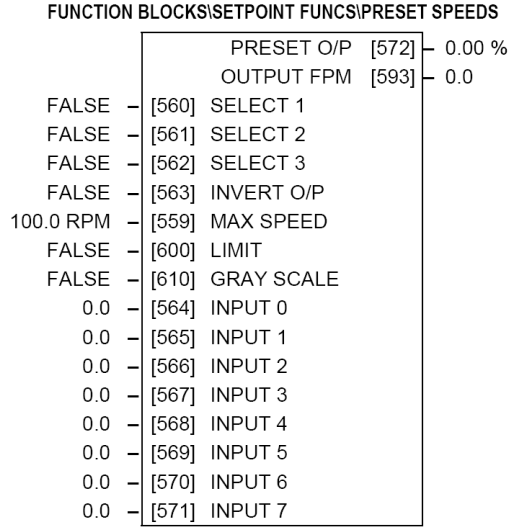

PRESET SPEEDS

Parameter	Tag	Range
SELECT 1	**560**	**FALSE / TRUE**
Select inputs 1.		
SELECT 2	**561**	**FALSE / TRUE**
Select inputs 2.		
SELECT 3	**562**	**FALSE / TRUE**
Select inputs 3.		
INVERT O/P	**563**	**FALSE / TRUE**
Changes the sign of the output. If TRUE, the output is of the opposite sign to the selected input.		
MAX SPEED	**559**	**0.1 to 3000.0 RPM**
Scaler for PRESET OP (%).		

PRESET SPEEDS

Parameter	Tag	Range
LIMIT	**600**	**FALSE / TRUE**
Clamp output to MAX SPEED if TRUE.		
GRAY SCALE	**610**	**FALSE / TRUE**
Selects Gray Scale encoding when TRUE, Binary encoding when FALSE. When gray scale is selected, only one input changes between state preventing the mis-selection of intermediate states.		
INPUT 0 to INPUT 7	**564, 565, 566, 567, 568, 569, 570, 571**	**-3000.0 to 3000.0**
Pre-set input variables.		
PRESET O/P	**572**	**—.xx %**
Scales the selected preset input by MAX SPEED.		
OUTPUT FPM	**593**	**—.x**
Outputs the selected INPUT value.		

Functional Description

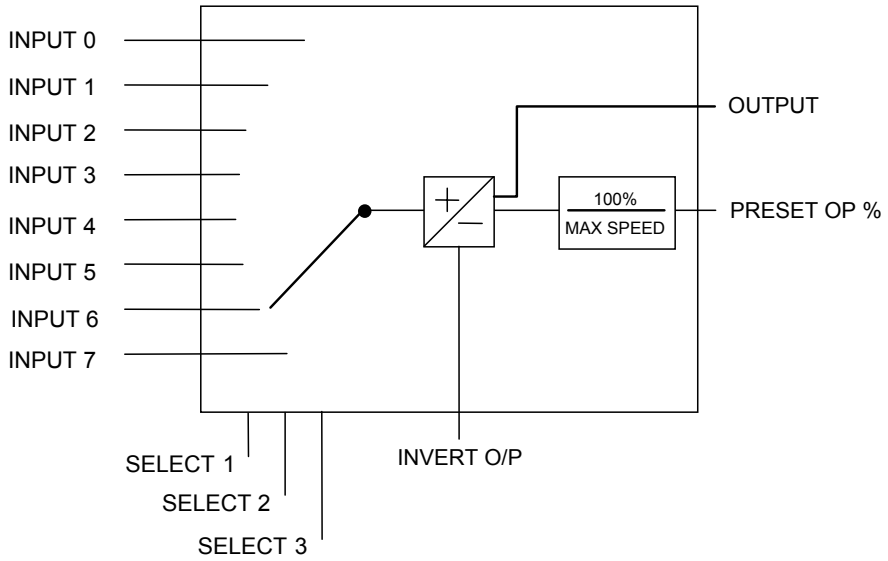

Selection Table

Three Boolean variables used to select between one of the 8 preset values.

BINARY ENCODING			
Select 3	Select 2	Select 1	Input
FALSE	FALSE	FALSE	0
FALSE	FALSE	TRUE	1
FALSE	TRUE	FALSE	2
FALSE	TRUE	TRUE	3
TRUE	FALSE	FALSE	4
TRUE	FALSE	TRUE	5
TRUE	TRUE	FALSE	6
TRUE	TRUE	TRUE	7

GRAY SCALE ENCODING			
Select 3	Select 2	Select 1	Input
FALSE	FALSE	FALSE	0
FALSE	FALSE	TRUE	1
FALSE	TRUE	TRUE	2
FALSE	TRUE	FALSE	3
TRUE	TRUE	FALSE	4
TRUE	TRUE	TRUE	5
TRUE	FALSE	TRUE	6
TRUE	FALSE	FALSE	7

PROFILED GAIN

MMI Menu Map

1 SETUP PARAMETERS
2 SPECIAL BLOCKS
3 PID
- PROP. GAIN
- MODE
- MIN PROFILE GAIN
- PROFILED GAIN

MMI Menu Map

1 FUNCTION BLOCKS
2 WINDER
3 PROFILED GAIN
- DIAMETER
- MIN DIAMETER

This function block may be used to profile the proportional gain input to the PID block.

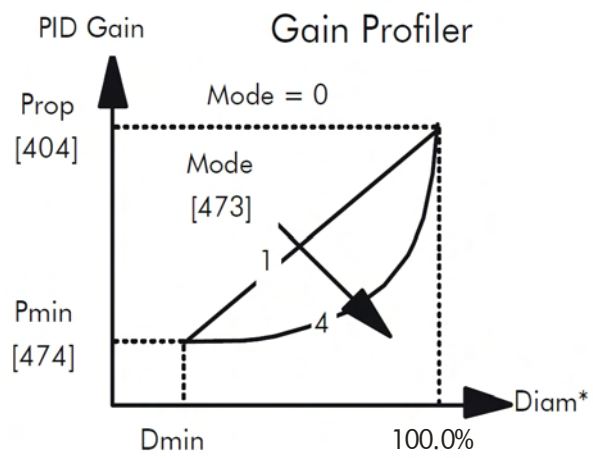

FUNCTION BLOCKS\WINDER\PROFILED GAIN

		PROFILED GAIN [475]	1.0
1.0	[404]	PROP. GAIN	
20.00 %	[474]	MIN PROFILE GAIN	
10.00 %	[709]	DIAMETER	
10.00 %	[710]	MIN DIAMETER	
0	[473]	MODE	

PROFILED GAIN

Parameter	Tag	Range
PROP. GAIN	**404**	**0.0 to 100.0**
The nominal gain prior to profiling.		
MIN PROFILE GAIN	**474**	**0.00 to 100.00 %**
This expresses the minimum gain required at minimum diameter (core) as a percentage of the (maximum) P gain at full diameter (100%), when MODE > 0.		
DIAMETER	**709**	**0.00 to 100.00 %**
The actual measured diameter. If appropriate, this may be connected to the DIAMETER output parameter in the DIAMETER CALC function block.		
MIN DIAMETER	**710**	**0.00 to 100.00 %**
Set to the minimum core diameter (normally the empty core diameter) as a percentage of the maximum roll diameter. If appropriate, this may be connected to the MIN DIAMETER parameter in the DIAMETER CALC function block.		

PROFILED GAIN

Parameter	Tag	Range
MODE	**473**	**0 to 4**

This determines the shape of the proportional gain profile. The higher the setting, the steeper the curve of the profiled gain.
For Mode = 0, Profiled Gain = constant = P.
For Mode = 1, Profiled Gain = A * (diameter - min diameter) + B.
For Mode = 2, Profiled Gain = A * (diameter - min diameter)^2 + B.
For Mode = 3, Profiled Gain = A * (diameter - min diameter)^3 + B.
For Mode = 4, Profiled Gain = A * (diameter - min diameter)^4 + B.

PROFILED GAIN	**475**	**—.x**

The proportional gain after profiling by a profiler block which varies the gain versus diameter. This is primarily to be used with Speed Profiled Winders for compensation against varying diameter and therefore inertia.

- When MODE is not ZERO (see above) this overrides the P gain above.
- When MODE = 0, then PROFILED GAIN = PROP. GAIN.

RAISE/LOWER

MMI Menu Map

1 SETUP PARAMETERS
2 RAISE/LOWER
- RESET VALUE
- INCREASE RATE
- DECREASE RATE
- RAISE INPUT
- LOWER INPUT
- MIN VALUE
- MAX VALUE
- EXTERNAL RESET

This function block acts as an internal motorised potentiometer (MOP).

The OUTPUT is not preserved when the drive is powered-down.

FUNCTION BLOCKS\SETPOINT FUNCS\RAISE/LOWER

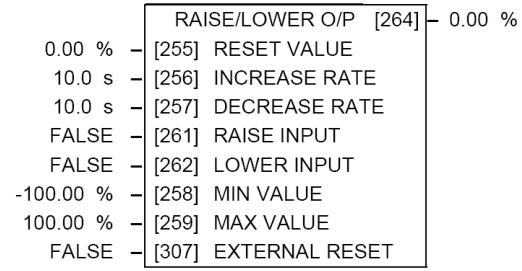

RAISE/LOWER

Parameter	Tag	Range
RAISE/LOWER O/P	**264**	**—.xx %**
The output value.		
RESET VALUE	**255**	**-300.00 to 300.00 %**
This reset value is pre-loaded directly into the output when EXTERNAL RESET is TRUE, or at power-up. It is clamped by MIN VALUE and MAX VALUE.		
INCREASE RATE	**256**	**0.1 to 600.0 s**
Rate of change of an increasing output value. An increasing value is defined as the output ramping away from zero.		
DECREASE RATE	**257**	**0.1 to 600.0 s**
Rate of change of a decreasing output value. A decreasing value is defined as the output ramping towards zero.		
RAISE INPUT	**261**	**FALSE / TRUE**
Command to raise the output value. When TRUE, increases the output at the rate determined by INCREASE RATE.		
LOWER INPUT	**262**	**FALSE / TRUE**
Command to lower the output value. When TRUE, decreases the output at the rate determined by DECREASE RATE.		

MMI Menu Map

1 FUNCTION BLOCKS
2 SETPOINT FUNCS
3 RAISE/LOWER
- RAISE/LOWER O/P

RAISE/LOWER

Parameter	Tag	Range
MIN VALUE	**258**	**-300.00 to 300.00 %**
Minimum ramp output clamp. This is a plain clamp, not a ramped "min speed" setting.		
MAX VALUE	**259**	**-300.00 to 300.00 %**
Maximum ramp output clamp.		
EXTERNAL RESET	**307**	**FALSE / TRUE**
When TRUE, sets the output of the Raise/Lower block to the RESET VALUE.		

Functional Description

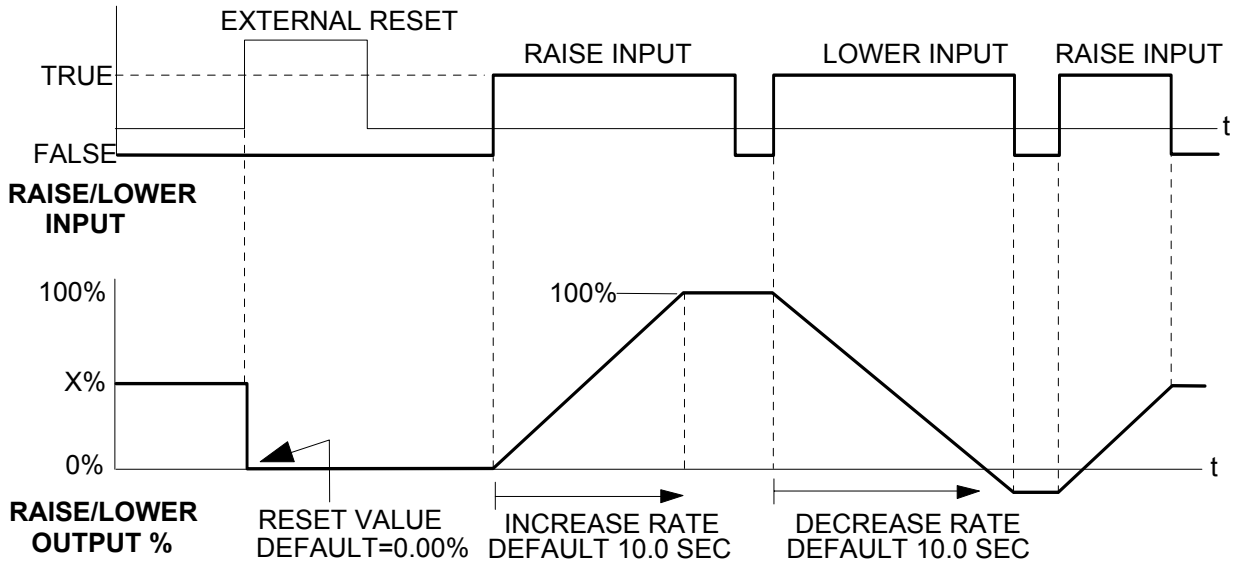

The diagram above illustrates the raise/lower functionality.

When EXTERNAL RESET is set TRUE, the raise/lower output resets to RESET VALUE (default = 0.00%).

When RAISE INPUT is TRUE, the output increases at INCREASE RATE. The output cannot exceed MAX VALUE.

The reverse is true when LOWER INPUT is TRUE: LOWER INPUT reduces the output at DECREASE RATE. The output cannot drop below MIN VALUE.

The ramp is held at its last value when the RAISE and LOWER INPUT are removed.

Setting both RAISE INPUT and LOWER INPUT to TRUE at the same time creates a ramp hold condition.

If MIN VALUE is greater than MAX VALUE the output is forced to zero.

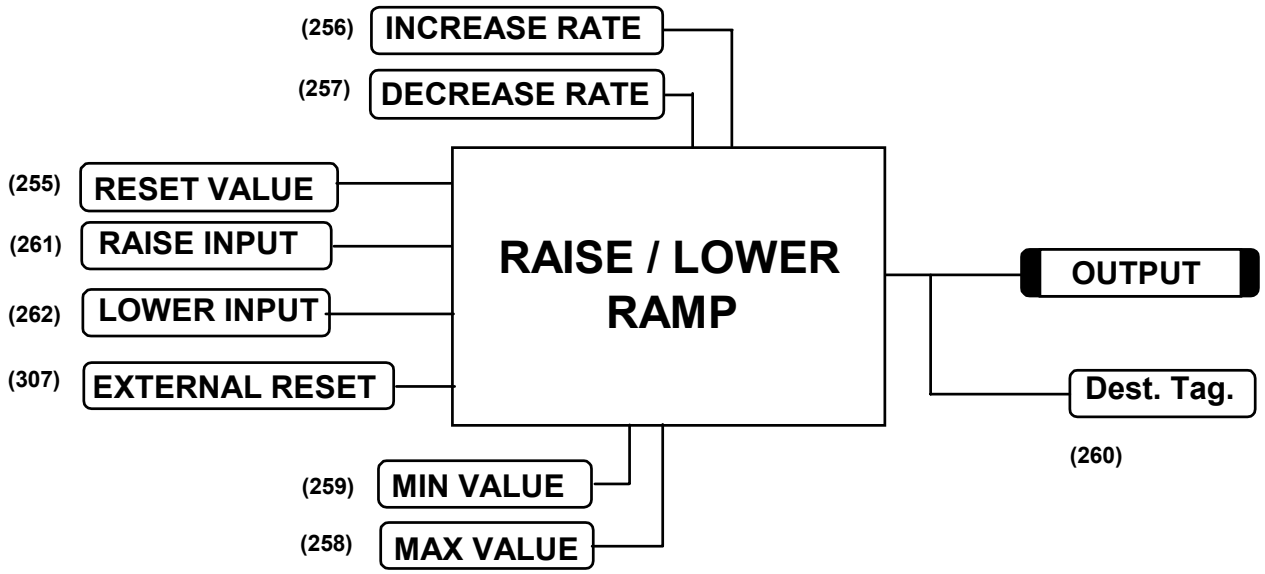

If Reset, Output = Reset Value (Clamped)

RAMPS

MMI Menu Map

1 SETUP PARAMETERS
2 RAMPS
- RAMP ACCEL TIME
- RAMP DECEL TIME
- RAMP HOLD
- INVERT
- % S-RAMP
- RAMPING THRESH.
- AUTO RESET
- EXTERNAL RESET
- RESET VALUE

MMI Menu Map

1 FUNCTION BLOCKS
2 SEQ & REF
3 RAMPS
- RAMP INPUT

MMI Menu Map

1 DIAGNOSTICS
- RAMPING
- RAMP OUTPUT

The RAMPS parameters set the shape and duration of the ramp used for starting and changing speeds.

NOTE **The STOP RATES function block contains a separate deceleration rate for controlled stopping of the drive.**

FUNCTION BLOCKS\SEQ & REF\RAMPS

		RAMP OUTPUT [85]	0.00 %
		RAMPING [113]	FALSE
10.0 s	[2]	RAMP ACCEL TIME	
10.0 s	[3]	RAMP DECEL TIME	
OFF	[118]	RAMP HOLD	
FALSE	[620]	INVERT	
0.00 %	[697]	RAMP INPUT	
2.50 %	[266]	% S-RAMP	
0.50 %	[286]	RAMPING THRESH.	
ENABLED	[287]	AUTO RESET	
DISABLED	[288]	EXTERNAL RESET	
0.00 %	[422]	RESET VALUE	

By default the inputs are ANIN 3 (A4) for a ramped speed input, and DIGIN 2 (C7) to switch RAMP HOLD. The input signal to the block is clamped by MIN SPEED, which sets the minimum ramp input speed when the drive is enabled. The default output connection is to SPEED LOOP:: SETPOINT 3.

RAMP INPUT is internally routed to the JOG/SLACK function block to be modified as determined by the JOG inputs. The RAMPS block then shapes the signal to produce the RAMP OUTPUT signal.

The RAMPING output becomes TRUE when the absolute value of the difference between RAMP OUTPUT and the JOG/SLACK function block output exceeds RAMPING THRESH.

RAMP ACCEL TIME and RAMP DECEL TIME set the acceleration and deceleration times taken for input changes. % S-RAMP adds a "S" shaped section to the linear ramp. When set to 0.00%, the ramp will be linear. As the percentage is increased, 350% of the S-RAMP time is added to the linear ramp creating more gradual starting and stopping. The formula for the actual ramp time is shown below. Ramp time is the value of parameters RAMP ACCEL TIME or RAMP DECEL TIME.

Actual Ramp Time = RAMP TIME x (3.5 x % S-RAMP/100 + 1)

RAMP HOLD stops the ramp from changing. When DIGIN 2 (C7) is ON, the ramp stays at the last ramp value.

The reset signal can have two sources, a RUN signal or an external reset signal. When AUTO RESET is ENABLED, the ramp resets whenever a Run signal is given at terminal C3. Connecting a digital input to EXTERNAL RESET allows an external source to reset the ramp.

RAMPS

Parameter	Tag	Range
RAMP ACCEL TIME	**2**	**0.1 to 600.0 s**
The acceleration time for 100% change.		
RAMP DECEL TIME	**3**	**0.1 to 600.0 s**
The deceleration time for 100% change.		

RAMPS

Parameter	Tag	Range
RAMP HOLD	**118**	**OFF / ON**
When ON, the ramp output is held at its last value. This is overridden by a ramp reset.		
INVERT	**620**	**FALSE / TRUE**
Inverts the RAMP INPUT signal.		
RAMP INPUT	**5**	**-105.00 to 105.00 %**
Input value.		
% S-RAMP	**266**	**0.00 to 100.00 %**
Percentage of ramp with S-shaped rate of change. A value of zero is equivalent to a linear ramp. Changing this value affects the ramp times.		
RAMPING THRESH.	**286**	**0.00 to 100.00 %**
Ramping flag threshold level. The threshold is used to detect whether the ramp is active.		
AUTO RESET	**287**	**DISABLED / ENABLED**
When ENABLED, the ramp is reset whenever SYSTEM RESET is TRUE. (SYSTEM RESET Tag 374 is an internal flag that is set TRUE for one cycle after the Speed/Current loop is enabled, i.e. every time the drive is started).		
EXTERNAL RESET	**288**	**DISABLED / ENABLED**
When ENABLED, the ramp is reset to RESET VALUE. EXTERNAL RESET does not depend on AUTO RESET for its operation.		
RESET VALUE	**422**	**-300.00 to 300.00 %**
The ramp output value at power-up, or when the ramp is reset. In order to catch a spinning load smoothly (`bumpless transfer') connect SPEED FEEDBACK Tag No. 62 (source) to RESET VALUE Tag No. 422 (destination).		
RAMP OUTPUT	**85**	**—.xx %**
Setpoint ramp output.		
RAMPING	**113**	**FALSE / TRUE**
The SETPOINT ramp function block is limiting the rate of change of Speed Setpoint.		

Functional Description

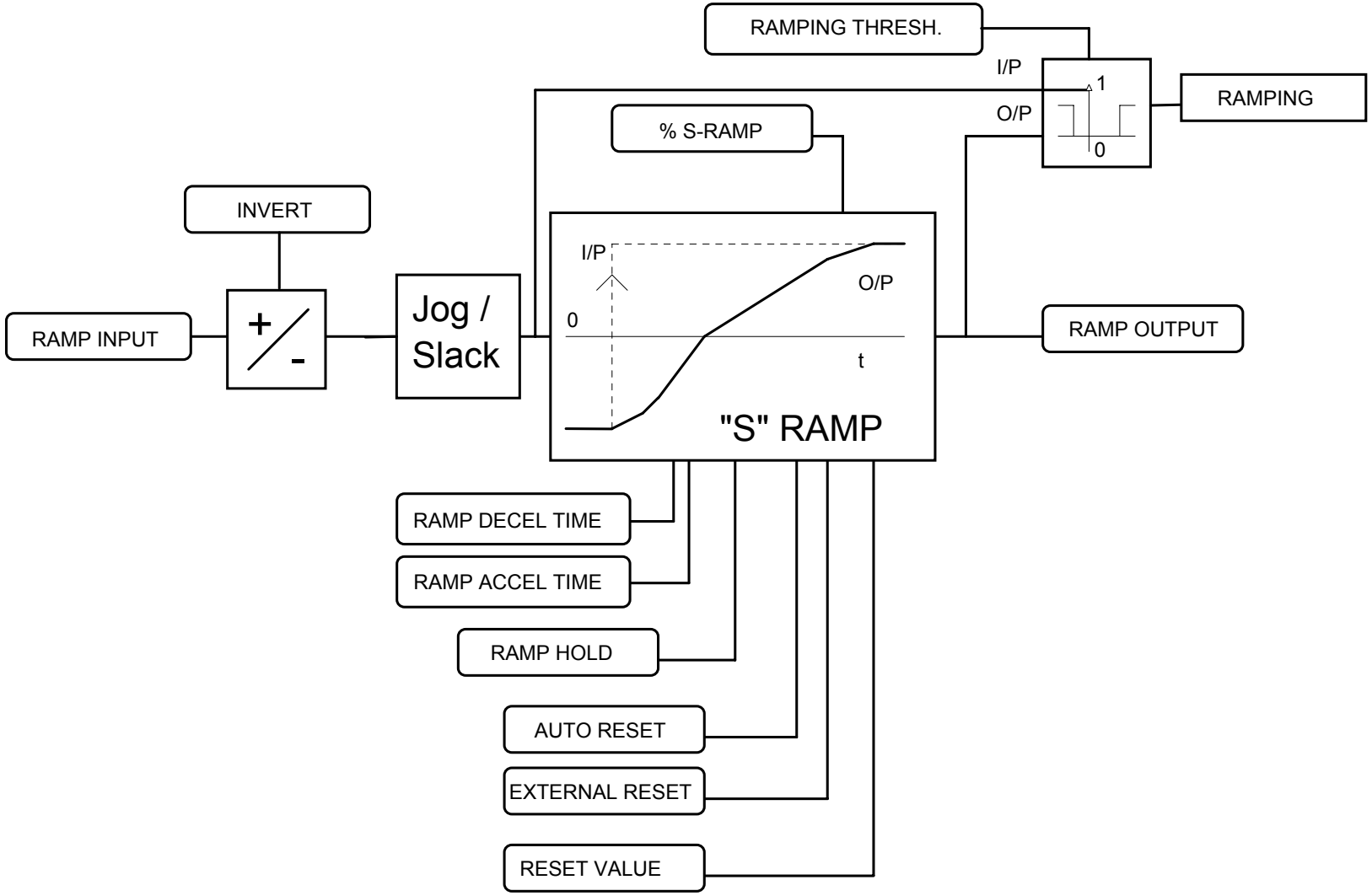

ACCELERATION/DECELERATION RATES

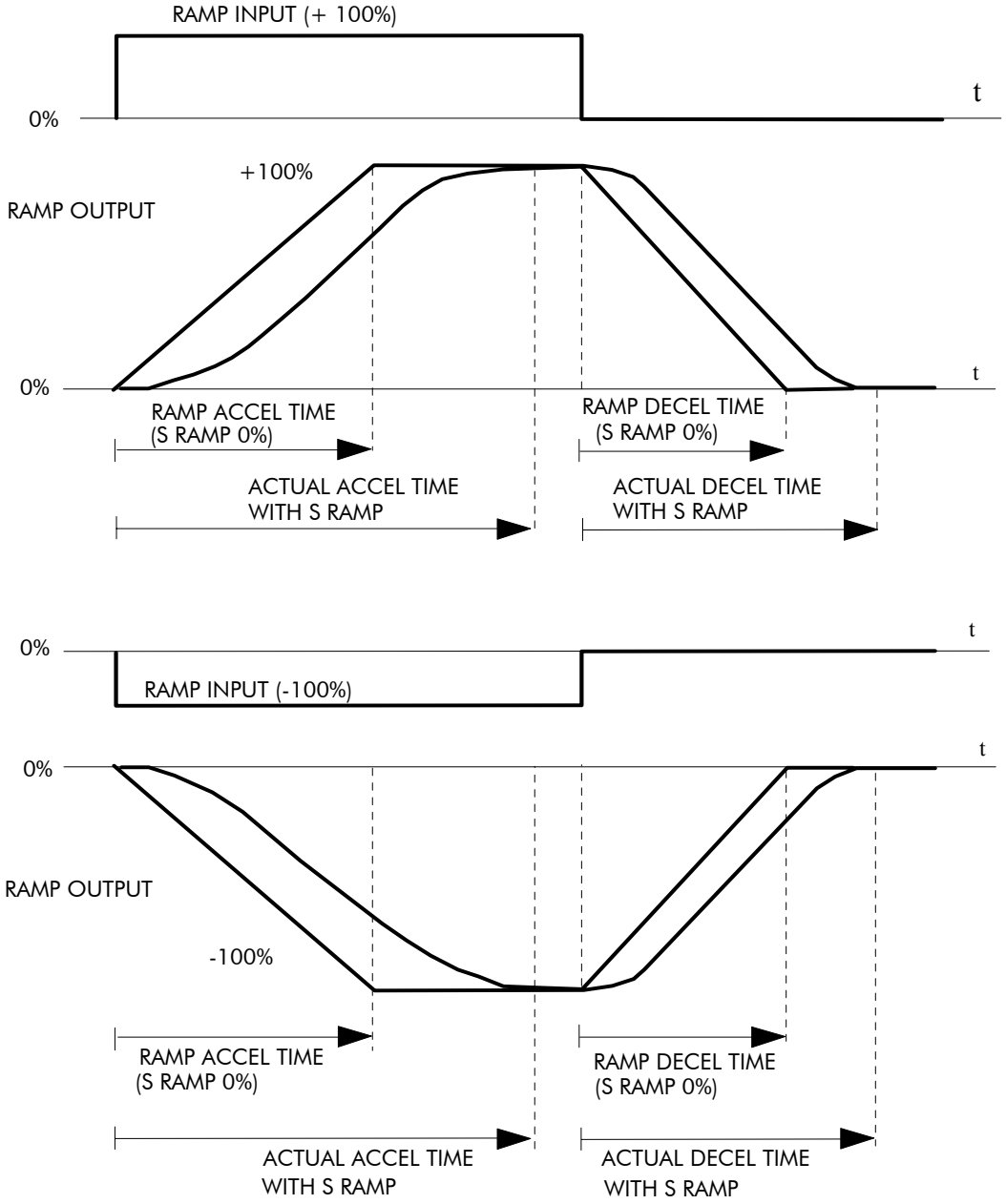

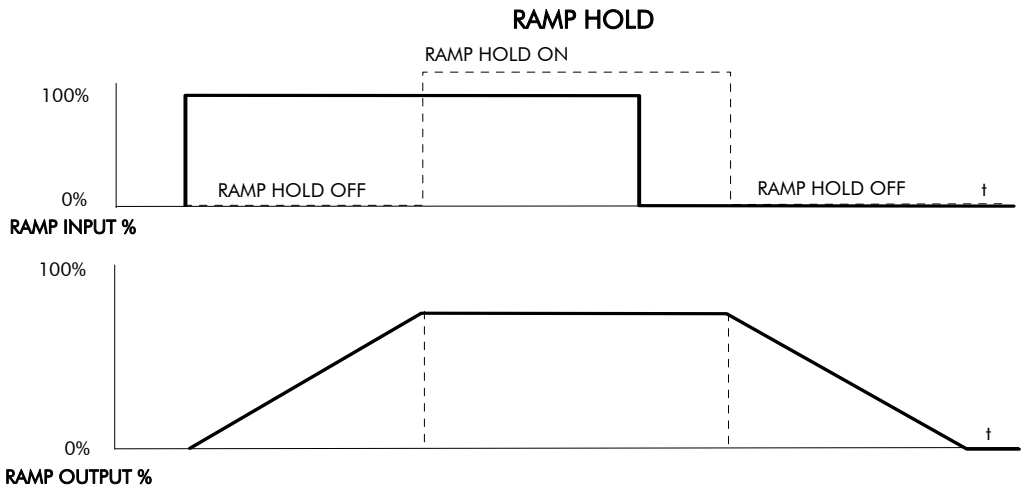

The ramp will function when a ramp input is present. When DIGIN 2 (C7) is ON, RAMP HOLD stops the ramp from changing. Even when the ramp input signal is removed, RAMP HOLD keeps the ramp output from changing. Once RAMP HOLD is OFF, the ramp resumes.

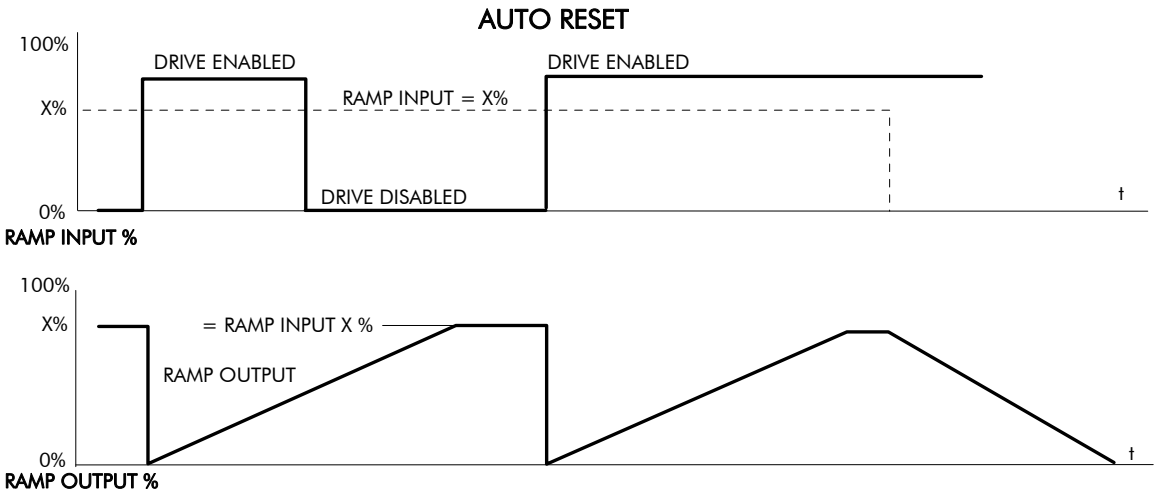

When AUTO RESET is ENABLED, ramp output resets to RESET VALUE each time the drive is enabled. In this example RESET VALUE is 0.00%. It does not reset if the drive is disabled.

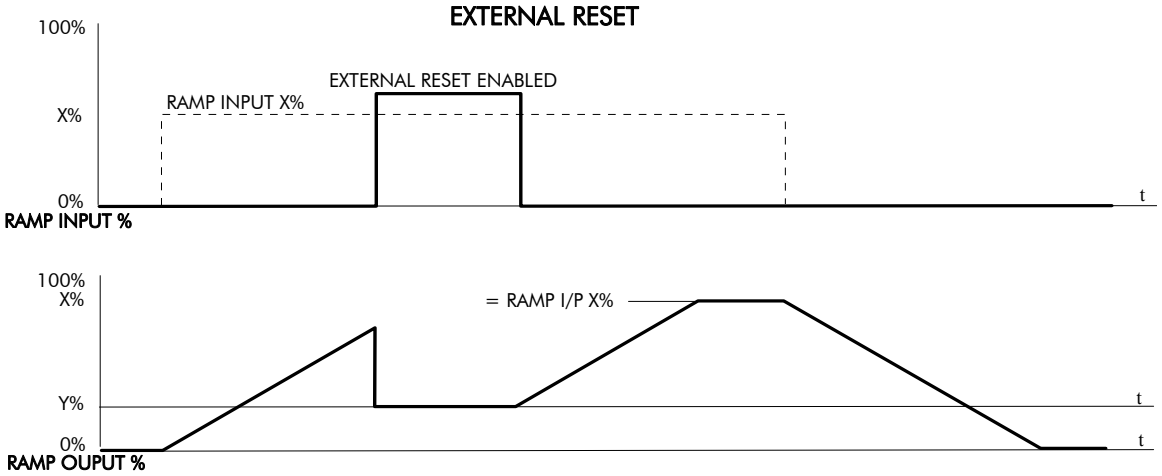

The ramp input is set to X% at time t_0. The ramp output will increase at the ramp rate.
While EXTERNAL RESET is ENABLED, the ramp output resets to RESET VALUE (Y%). When EXTERNAL RESET is DISABLED, the ramp output continues to follow the input signal.

SELECT

MMI Menu Map

1 FUNCTION BLOCKS
2 SETPOINT FUNCS
3 SELECT
4 SELECT 1
4 SELECT 2
- INPUT 0
- INPUT 1
- INPUT 2
- INPUT 3
- INPUT 4
- INPUT 5
- INPUT 6
- INPUT 7
- SELECT
- OUTPUT 0
- OUTPUT 1

Used to select a value from one of eight inputs, depending on the value of the select input. A second output is provided to allow the block to be used as two banks of four inputs.

FUNCTION BLOCKS\SETPOINT FUNCS\SELECT\SELECT 1

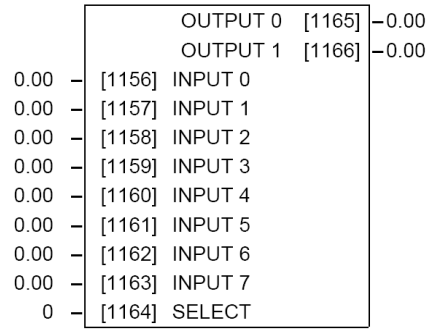

FUNCTION BLOCKS\SETPOINT FUNCS\SELECT\SELECT 2

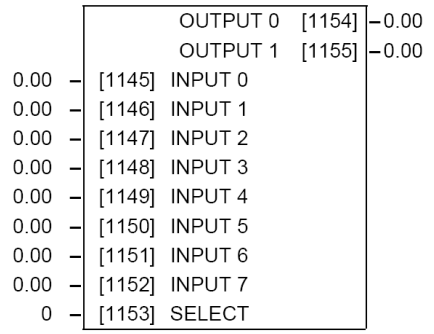

SELECT

Parameter	Tag	Range
INPUT 0 to INPUT 7	**1156 to 1163**	**-32768.00 to 32768.00**
Inputs to the select block		
SELECT	**1164**	**0 to 7**
Determines which of the inputs is routed to OUTPUT 1 . In addition, if SELECT INPUT is in the range 0 to 3, INPUT 4 to INPUT 7 respectively is routed to OUTPUT 2, otherwise OUTPUT 2 is unchanged.		
OUTPUT 0	**1165**	**—.xx**
Selected output		
OUTPUT 1	**1166**	**—.xx**
Alternative selected output from INPUT 4 to INPUT 7 if SELECT is less than 4.		

SEQUENCING

This function block contains all the parameters relating to the sequencing (start and stop) of the drive.

MMI Menu Map

1 SETUP PARAMETERS
2 AUX I/O
- AUX START
- AUX JOG
- AUX ENABLE
- JOG SLACK
- ENABLE
- REM.SEQ.ENABLE
- REM. SEQUENCE
- SEQ STATUS

MMI Menu Map

1 DIAGNOSTICS
- PROGRAM STOP
- COAST STOP
- DRIVE START
- DRIVE ENABLE
- START (C3)
- CONTACTOR CLOSED
- READY
- DRIVE RUNNING
- SYSTEM RESET

MMI Menu Map

1 FUNCTION BLOCKS
2 SEQ & REF
3 SEQUENCING
- COMMS TIMEOUT
- SEQ STATE

FUNCTION BLOCKS\SEQ & REF\SEQUENCING

		SEQ STATUS	[537]	0x0000
		DRIVE START	[82]	OFF
		CONTACTOR CLOSED	[83]	FALSE
		DRIVE ENABLE	[84]	FALSE
		DRIVE RUNNING	[376]	FALSE
		SYSTEM RESET	[374]	FALSE
		READY	[125]	FALSE
		SEQ STATE	[114]	SEQ INIT
		START (C3)	[68]	OFF
		PROGRAM STOP	[80]	FALSE
		COAST STOP	[525]	FALSE
ON	[161]	AUX START		
ON	[227]	AUX JOG		
ON	[168]	AUX ENABLE		
OFF	[496]	JOG/SLACK		
OFF	[497]	ENABLE		
OFF	[535]	REM.SEQ.ENABLE		
0x8000	[536]	REM.SEQUENCE		
0.0 s	[1204]	COMMS TIMEOUT		

SEQUENCING

Parameter	Tag	Range
AUX START	**161**	**OFF / ON**
Software Start/Run command. Auxiliary Start is ANDed with the Start input, C3, to generate Drive Start. This should normally be left ON.		
AUX JOG	**227**	**OFF / ON**
Software Jog command. Auxiliary Jog is ANDed with the Jog input, Tag 496 (by default C4), to generate Drive Jog. This should normally be left ON.		
AUX ENABLE	**168**	**OFF / ON**
Software Enable command. Auxiliary Enable is ANDed with the Enable input, Tag 497 (by default C5), to generate Drive Enable. This should normally be left ON.		

SEQUENCING

Parameter	Tag	Range
JOG/SLACK	**496**	**OFF / ON**
Main jog input which is connected to DIGITAL INPUT C4 by default. The Jog input is ANDed with Auxiliary Jog input, Tag 227, to generate Drive Jog.		
ENABLE	**497**	**OFF / ON**
Enable input which is connected to DIGITAL INPUT C5 by default. The Enable input is ANDed with Auxiliary Enable input, Tag 168, to generate Drive Enable.		
REM.SEQ.ENABLE	**535**	**FALSE / TRUE**
(Refer to Appendix A: "Serial Communications"). When enabled, the drive will accept Sequencing commands exclusively from the REM. SEQUENCE parameter, Tag 536. FALSE - disables REM. SEQUENCE TRUE - enables REM. SEQUENCE		
REM.SEQUENCE	**536**	**0x0000 to 0xFFFF**
A control word that allows the device to be operated remotely over a field bus. REM. SEQ. ENABLE must be TRUE to enable this function. (Refer to Appendix A: "Serial Communications").		
COMMS TIMEOUT	**1204**	**0.0 to 60.0 s**
A watchdog timeout that may be used when the drive is in remote sequencing mode. The watchdog feature is enabled by selecting a non-zero time in this parameter. The watchdog is reset every time the REM.SEQUENCE word, (Tag 536), is written.		
SEQ STATUS	**537**	**0x0000 to 0xFFFF**
An data word that reports the status of the important system flags that can be read over a field bus. . (Refer to Appendix A: "Serial Communications").		
DRIVE START	**82**	**OFF / ON**
Logical OR of the START and JOG inputs.		
CONTACTOR CLOSED	**83**	**FALSE / TRUE**
When ON, the main contactor coil is energised. Refer to Terminal Information for D5 & D6 in Appendix E: "Technical Specifications" - Terminal Information.		
DRIVE ENABLE	**84**	**FALSE / TRUE**
Drive speed and current loop are enabled/quenched.		
DRIVE RUNNING	**376**	**FALSE / TRUE**
When TRUE, the stack is switched on and enabled.		

SEQUENCING

Parameter	Tag	Range
SYSTEM RESET	**374**	**FALSE / TRUE**
Set for one cycle as the drive is enabled.		
READY	**125**	**FALSE / TRUE**
The drive is ready to accept an enable signal.		
SEQ STATE	**114**	**See below**
0: SEQ INIT 1: SEQ INIT 2: SEQ HOLD 3: SEQ STANDBY 4: SEQ PRE READY 5: SEQ READY 6: SEQ AUTOTUNING 7: SEQ RUN 8: SEQ AT ZERO SPD. 9: SEQ QUENCH 10: SEQ PROGRAM STOP 11: SEQ STOP 12: SEQ DELAY STOP 13: CURRENT DECAY 14: SEQ COAST STOP 15: SEQ ERROR		
START (C3)	**68**	**OFF / ON**
State of the Start/Run terminal.		
PROGRAM STOP	**80**	**FALSE / TRUE**
State of program stop (Terminal B8). When B8 is at 24V, then PROGRAM STOP is FALSE.		
COAST STOP	**525**	**FALSE / TRUE**
State of coast stop (Terminal B9). When B9 is at 24V, then COAST STOP is FALSE.		

SETPOINT SUM

MMI Menu Map

1 SETUP PARAMETERS
2 SETPOINT SUM 1
- RATIO 1
- RATIO 0
- SIGN 1
- SIGN 0
- DIVIDER 1
- DIVIDER 0
- LIMIT
- INPUT 2
- INPUT 1
- INPUT 0

Use this menu to sum and scale up to three analog inputs to produce the SPT. SUM output.

INPUT 0 and INPUT 1 have individual ratio and divider scalers, and signs. The inputs have symmetrical limits set by LIMIT. INPUT 2 has no scaling or limits.

The output, after INPUT 0, INPUT 1 and INPUT 2 are summed, is also clamped by LIMIT before producing the SPT. SUM output.

FUNCTION BLOCKS\SETPOINT FUNCS\SETPOINT SUM\SETPOINT SUM 1

		SPT SUM OUTPUT	[86]	– 0.00 %
		STPT SUM 1 OUT 1	[702]	– 0.00 %
		STPT SUM 1 OUT 0	[703]	– 0.00 %
0.00 %	–	[309]	INPUT 0	
0.00 %	–	[701]	INPUT 1	
0.00 %	–	[423]	INPUT 2	
1.0000	–	[6]	RATIO 1	
1.0000	–	[208]	RATIO 0	
1.0000	–	[419]	DIVIDER 1	
1.0000	–	[420]	DIVIDER 0	
POSITIVE	–	[8]	SIGN 1	
POSITIVE	–	[292]	SIGN 0	
105.00 %	–	[375]	LIMIT	

FUNCTION BLOCKS\SETPOINT FUNCS\SETPOINT SUM\SETPOINT SUM 2

		SPT SUM OUTPUT	[451]	– 0.00 %
		STPT SUM 2 OUT 1	[492]	– 0.00 %
		STPT SUM 2 OUT 0	[491]	– 0.00 %
0.00 %	–	[444]	INPUT 0	
0.00 %	–	[443]	INPUT 1	
0.00 %	–	[445]	INPUT 2	
1.0000	–	[446]	RATIO 1	
1.0000	–	[447]	RATIO 0	
1.0000	–	[466]	DIVIDER 1	
1.0000	–	[448]	DIVIDER 0	
POSITIVE	–	[704]	SIGN 1	
POSITIVE	–	[705]	SIGN 0	
105.00 %	–	[449]	LIMIT	

SETPOINT SUM

MMI Menu Map

1 FUNCTION BLOCKS
2 SETPOINT FUNCS
3 SETPOINT SUM
4 SETPOINT SUM 1
- SPT SUM OUTPUT
- STPT SUM 1 OUT 1
- STPT SUM 1 OUT 0

Parameter	Tag	Range
INPUT 0 Input 0 value.	**309**	**-300.00 to 300.00 %**
INPUT 1 Input 1 value.	**701**	**-300.00 to 300.00 %**
INPUT 2 Input 2 value.	**423**	**-300.00 to 300.00 %**
RATIO 1 Multiplier term for INPUT 1.	**6**	**-3.0000 to 3.0000**
RATIO 0 Multiplier term for INPUT 0.	**208**	**-3.0000 to 3.0000**
DIVIDER 1 Divider scaling for INPUT 1. Dividing by 0 (zero) results in a zero output.	**419**	**-3.0000 to 3.0000**
DIVIDER 0 Divider scaling for INPUT 0. Dividing by 0 (zero) results in a zero output.	**420**	**-3.0000 to 3.0000**
SIGN 1 Polarity for INPUT 1.	**8**	**NEGATIVE / POSITIVE**
SIGN 0 Polarity for INPUT 0.	**292**	**NEGATIVE / POSITIVE**

SETPOINT SUM

Parameter	Tag	Range
LIMIT	**375**	**0.00 to 200.00 %**

The Setpoint Sum programmable limit is symmetrical and has the range 0.00% to 200.00%. The limit is applied both to the intermediate results of the RATIO calculation and the total output.

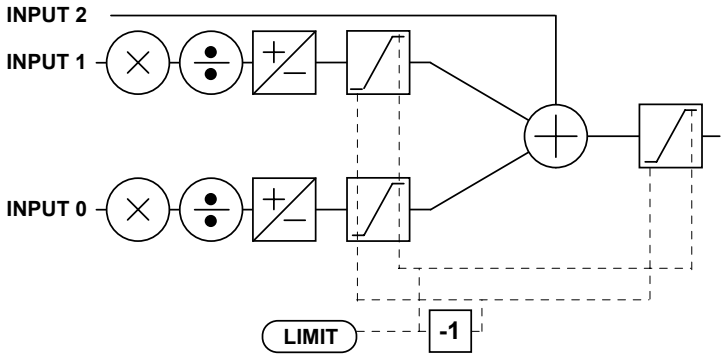

SPT SUM OUTPUT	**86**	**—.xx %**

The sum of input 0, 1 and 2 after the limit clamp.

STPT SUM 1 OUT 1	**702**	**—.xx %**

An additional output provided to gain access to Input 1 channel sub-calculations. The result of (INPUT 1 x RATIO 1) / DIVIDER 1 clamped to within ± LIMIT.

STPT SUM 1 OUT 0	**703**	**—.xx %**

An additional output provided to gain access to Input 0 channel sub-calculations. The result of (INPUT 0 x RATIO 0) / DIVIDER 0 clamped to within ± LIMIT.

MMI Menu Map

1 FUNCTION BLOCKS
2 SETPOINT FUNCS
3 SETPOINT SUM
4 SETPOINT SUM 2
- INPUT 0
- INPUT 1
- INPUT 2
- RATIO 1
- RATIO 0
- DIVIDER 1
- DIVIDER 0
- SIGN 1
- SIGN 0
- LIMIT
- SPT SUM OUTPUT
- STPT SUM 2 OUT 1
- STPT SUM 2 OUT 0

Functional Description

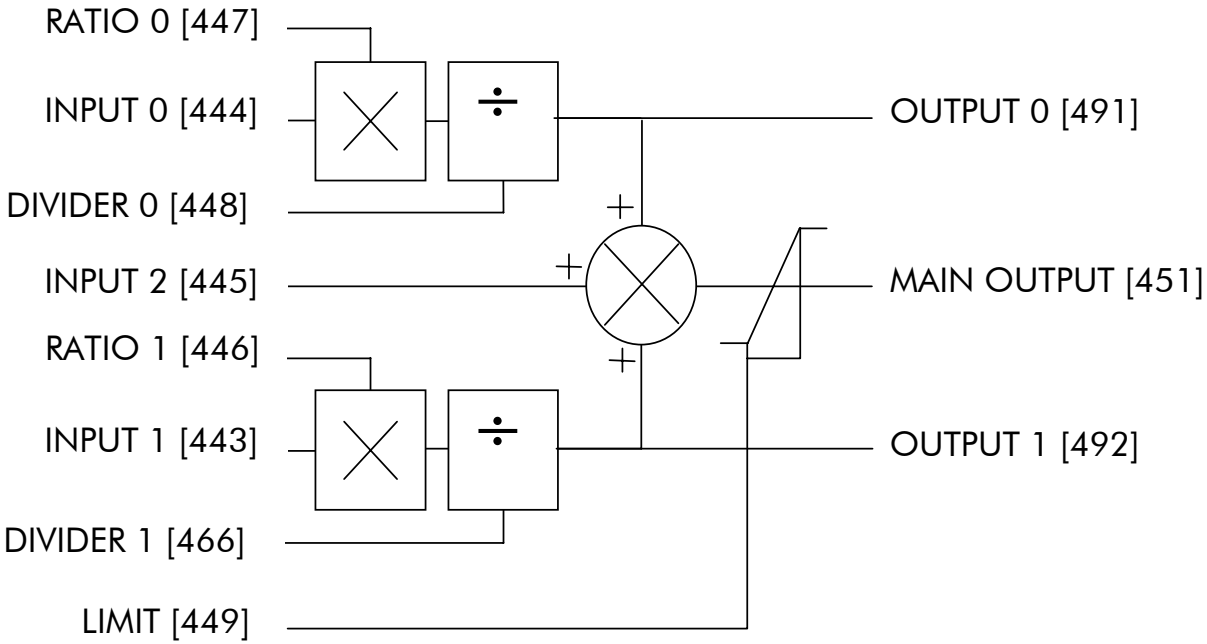

SPEED LOOP

MMI Menu Map

1 SETUP PARAMETERS
2 SPEED LOOP
- SPD.PROP.GAIN
- SPD.INT.TIME
- INT. DEFEAT
- PRESET TORQUE
- PRESET T SCALE
- SPEED FBK SELECT
- ENCODER SIGN
- SPD.FBK.FILTER
- >> ADVANCED
- >> SETPOINTS

MMI Menu Map

1 SETUP PARAMETERS
2 SPEED LOOP
3 SETPOINTS
- SETPOINT 1
- SIGN 2 (A3)
- RATIO 2 (A3)
- SETPOINT 2 (A3)
- SETPOINT 3
- SETPOINT 4
- MAX DEMAND
- MIN DEMAND

Use this block to tune the speed loop PI to produce a current demand.

This function block has five main functions:

1. **Combining the 4 speed setpoints into a single speed setpoint.**

   Note that the speed demand is created from the combined speed setpoints and modified by any prevailing stop condition according to the STOP RATES function block settings.

2. **Selection of the speed feedback method.**

   ZERO SPD OFFSET from the CALIBRATION function block is applied to the selected speed feedback to null out any remaining feedback at zero actual speed.

3. **Implementation of the PI speed controller.**

   SPEED DEMAND is summed algebraically with SPEED FEEDBACK to produce SPEED ERROR. When the drive is enabled, SPEED ERROR is controlled by the PI loop. The resulting current demand signal is routed to the CURRENT LOOP function block and to the ADVANCED::ZERO SPD. QUENCH sub-menu.

   The PI output is accessible via Tag No. 356, TOTAL I DMD. This point is before the I Limit clamps and the summing of the additional current demand. (This tag is not visible on the MMI).

4. **Speed controller gain and integral time constant profiling with speed.**

   The gains change when the motor speed feedback reaches the thresholds set by SPD BRK 1 (LOW) and SPD BRK 2 (HIGH).

FUNCTION BLOCKS\MOTOR CONTROL\SPEED LOOP

		SPEED ERROR FILTERED [297]	0.00 %
		SPEED LOOP O/P [549]	0.00 %
		SPEED DEMAND [89]	0.00 %
		UNFIL.SPD.FBK [62]	0.00 %
		SPEED SETPOINT [63]	0.00 %
		UNFIL.SPD.ERROR [64]	0.00 %
		SETPOINT 2 (A3) [290]	0.00 %
10.00	[14]	SPD PROP GAIN	
0.500 s	[13]	SPD INT TIME	
OFF	[202]	INT. DEFEAT	
0.000	[547]	SPD.FBK.FILTER	
0.00 %	[289]	SETPOINT 1	
POSITIVE	[9]	SIGN 2 (A3)	
1.0000	[7]	RATIO 2 (A3)	
0.00 %	[291]	SETPOINT 3	
0.00 %	[41]	SETPOINT 4	
105.00 %	[357]	MAX DEMAND	
-105.00 %	[358]	MIN DEMAND	
0.00 %	[595]	PRESET TORQUE	
100.00 %	[604]	PRESET T SCALE	
DISABLED	[268]	MODE	
1.00 %	[269]	SPD BRK1 (LOW)	
5.00 %	[270]	SPD BRK2 (HIGH)	
5.00	[271]	PROP. GAIN	
0.500 s	[272]	INT TIME CONST	
1.0000	[274]	I GAIN IN RAMP	
0.50 %	[284]	ZERO SPD. LEVEL	
1.50 %	[285]	ZERO IAD LEVEL	
ARM VOLTS FBK	[47]	SPEED FBK SELECT	

- At or below SPD BRK 1 (LOW), the speed loop uses the PROP. GAIN and INT. TIME CONST. values as its PI loop gains.
- Between SPD BRK 1 (LOW) and SPD BRK 2 (HIGH), profiling occurs and the speed loop gains are determined by another parameter value (according to the selection of the MODE parameter).
- Above SPD BRK 2 (HIGH), the SPD. PROP. GAIN and SPD. INT. TIME settings are used.

MODE selects the parameter for profiling the speed loop PI gains when the motor speed is between the two speed breakpoints.

MMI Menu Map

1 SETUP PARAMETERS
2 SPEED LOOP
3 ADVANCED
>> ADAPTION
I GAIN IN RAMP
>> ZERO SPD. QUENCH

5. **Zero speed/current disabling of thyristor firing**

The current loop is disabled when SPEED DEMAND, SPEED FEEDBACK and CURRENT DEMAND have all dropped to the threshold levels set by ZERO SPD. LEVEL and ZERO IAD LEVEL.

This is similar to Standstill logic (it stops making current but the contactor stays energised) except that the speed loop remains enabled and this will cause the current loop to unquench very quickly.

MMI Menu Map

1 SETUP PARAMETERS
2 SPEED LOOP
3 ADVANCED
4 ADAPTION
MODE
SPD BRK 1 (LOW)
SPD BRK 2 (HIGH)
PROP. GAIN
INT.TIME. CONST

SPEED LOOP

Parameter	Tag	Range
SPD PROP GAIN	**14**	**0.00 to 200.00**
Speed loop PI proportional gain adjustment.		
SPD INT TIME	**13**	**0.001 to 30.000 s**
Speed loop PI integral gain adjustment.		
INT. DEFEAT	**202**	**OFF / ON**
When ON it inhibits the integral part of the speed loop PI control to give proportional only control.		
SPEED FBK FILTER (SPD.FBK.FILTER)	**547**	**0.000 to 1.000**

A simple filter function that is applied to speed feedback to reduce ripple caused by low line count encoders and noisy tachos. A value of 0 disables the filter action ,and 1.00 is the maximum value. A typical value would be between 0.5 and 0.75.

INCREASING THE FILTER VALUE MAY MAKE THE SPEED LOOP UNSTABLE.

The filter time constant τ in milliseconds can be calculated from the following equation:

$$\tau = \frac{3.3}{Log_e\left(\frac{1}{\alpha}\right)}$$

Where α is the value of SPD FBK FILTER. A value of 0.5 equates to a filter time of 4.8ms, 0.8 to 14.7ms, and 0.9 to 31.2ms.

SETPOINT 1	**289**	**-105.00 to 105.00 %**
Speed Setpoint 1 (Default Setpoint Sum 1 O/P).		
SIGN 2 (A3)	**9**	**NEGATIVE / POSITIVE**
Speed Setpoint 2 Sign.		

MMI Menu Map

1 SETUP PARAMETERS
2 SPEED LOOP
3 ADVANCED
4 ZERO SPD. QUENCH
ZERO SPD. LEVEL
ZERO IAD LEVEL

SPEED LOOP

Parameter	Tag	Range
RATIO 2 (A3) Speed Setpoint 2 Ratio.	**7**	**-3.0000 to 3.0000**
SETPOINT 3 Speed Setpoint 3 (Default Ramp O/P).	**291**	**-105.00 to 105.00 %**
SETPOINT 4 Speed Setpoint 4 (Default 5703 I/P).	**41**	**-105.00 to 105.00 %**
MAX DEMAND Sets the maximum input to the speed loop. It is clamped at 105% to allow for overshoot in the external loops.	**357**	**0.00 to 105.00 %**
MIN DEMAND Sets the minimum input to the speed loop.	**358**	**-105.00 to 105.00 %**
PRESET TORQUE The PRESET TORQUE is pre-loaded into the speed loop integral store as the speed loop in enabled. This is scaled by PRESET T SCALE. This may be used to pre-load the output of the speed loop in elevator/hoist applications to prevent the load from falling back when the brake is released. PRESET T SCALE may be used in situations where the load may vary.	**595**	**-200.00 to 200.00 %**
PRESET T SCALE Scaler for PRESET TORQUE.	**604**	**-200.00 to 200.00 %**
MODE Selects the speed breakpoint input signal. 0 : DISABLED 1 : SPD FBK DEP — Speed Feedback Dependent 2 : SPD ERR DEP — Speed Error Dependent 3 : CUR DMD DEP — Current Demand Dependent	**268**	**See below**
SPD BRK 1 (LOW) Speed breakpoint 1 to start gain profiling.	**269**	**0.00 to 100.00 %**
SPD BRK 2 (HIGH) Speed breakpoint 2 to stop gain profiling.	**270**	**0.00 to 100.00 %**

SPEED LOOP

Parameter	Tag	Range
PROP. GAIN	**271**	**0.00 to 200.00**
Proportional gain used below SPD BRK 1 (LOW)		
INT. TIME CONST.	**272**	**0.001 to 30.000 s**
Integral time constant used below SPD BRK 1 (LOW)		
I GAIN IN RAMP	**274**	**0.0000 to 2.0000**
This scales the integral gain when the drive is ramping. When RAMPING (Tag No. 113) is TRUE, the integral gain from ADAPTION is switched through the I GAIN IN RAMP scaler. This can be used to help prevent integral wind-up while the drive is ramping (particularly high inertia loads).		
ZERO SPD. LEVEL	**284**	**0.00 to 200.00 %**
Sets the threshold of SPEED DEMAND and SPEED FEEDBACK for suspending the current output.		
ZERO IAD LEVEL	**285**	**0.00 to 200.00 %**
Sets the current demand threshold for suspending the current output.		
SPEED ERROR FILTERED	**297**	**—.xx %**
Refer to Chapter 6: "The Keypad" - The Keypad Menus (DIAGNOSTICS).		
SPEED LOOP O/P	**549**	**—.xx %**
Refer to Chapter 6: "The Keypad" - The Keypad Menus (DIAGNOSTICS).		
SPEED DEMAND	**89**	**—.xx %**
Refer to Chapter 6: "The Keypad" - The Keypad Menus (DIAGNOSTICS).		
UNFIL.SPD.FBK	**62**	**—.xx %**
Refer to Chapter 6: "The Keypad" - The Keypad Menus (DIAGNOSTICS).		
SPEED SETPOINT	**63**	**—.xx %**
Refer to Chapter 6: "The Keypad" - The Keypad Menus (DIAGNOSTICS).		
UNFIL.SPD.ERROR	**64**	**—.xx %**
Refer to Chapter 6: "The Keypad" - The Keypad Menus (DIAGNOSTICS).		
SETPOINT 2 (A3)	**290**	**—.xx %**
Speed Setpoint 2 - Fixed (non-configurable) setpoint scanned synchronously with the current loop		

SPEED LOOP

Parameter	Tag	Range
SPEED FBK SELECT	**47**	**See below**

Determines the source of the speed feedback signal. The default, ARM VOLTS FBK, uses internal circuitry to derive the speed feedback. The other selections require the appropriate external device to provide the feedback signal.

0 : ARM VOLTS FBK
1 : ANALOG TACH
2 : ENCODER
3 : ENCODER/ANALOG - for Parker SSD Drives use

Functional Description

Speed Loop PI with Current Demand Isolate

The speed loop output is still valid (active) with the I DMD. ISOLATE parameter enabled.

NOTE

1. **The speed loop is reset by unquenching the speed loop/current loop.**
2. **I DMD. ISOLATE is overridden by Program Stop (B8) or Normal Stop (C3).**
3. **The speed loop PI holds the integral term as soon as the PI output reaches current limit. This is true even in Current Demand Isolate mode where it may interfere depending on the way the speed PI is used. This feature is currently not suppressible.**

105% Speed Demands

The speed demand clamping allows the speed setpoint to reach 105%. This applies only to the final summing junction immediately before the speed loop and also to the Setpoint Sum 1 output. Individual speed setpoints are still clamped to 100%.

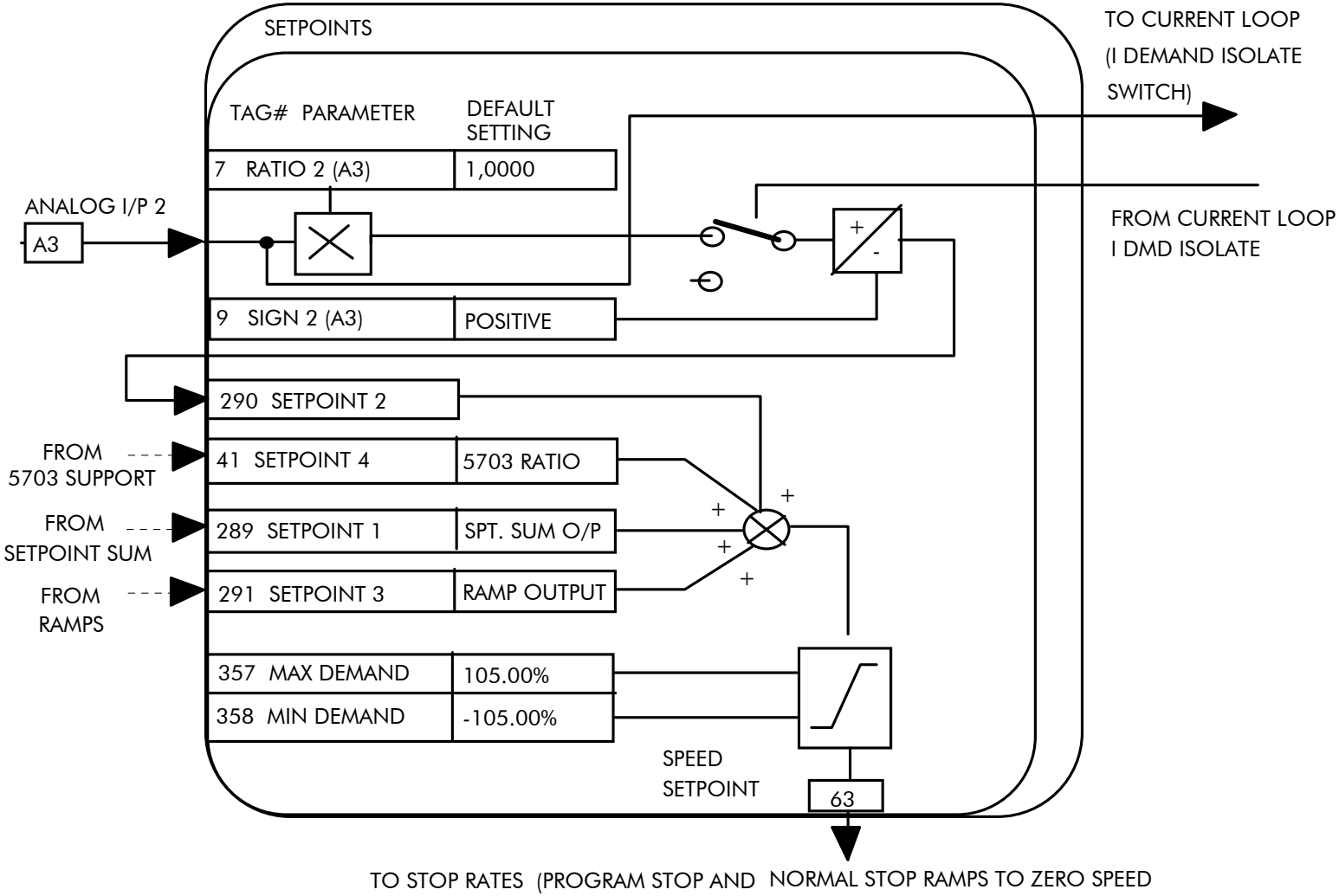

SPEED LOOP

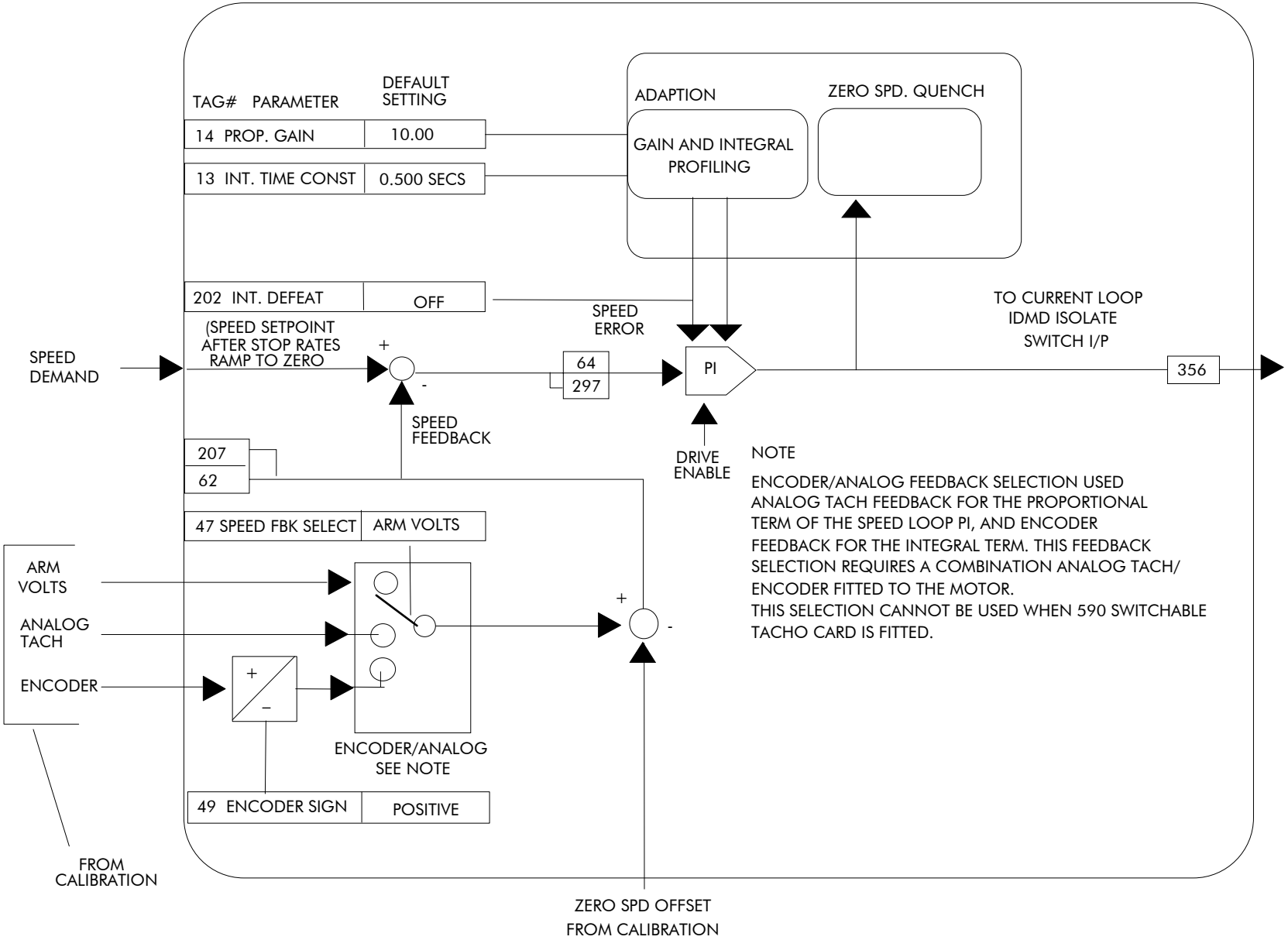
TAG# PARAMETER
DEFAULT SETTING
14 PROP. GAIN
10.00
13 INT. TIME CONST
0.500 SECS
ADAPTION
ZERO SPD. QUENCH
GAIN AND INTEGRAL PROFILING
202 INT. DEFEAT
OFF
SPEED ERROR
TO CURRENT LOOP IDMD ISOLATE SWITCH I/P
SPEED DEMAND
(SPEED SETPOINT AFTER STOP RATES RAMP TO ZERO
+
-
64
297
PI
356
SPEED FEEDBACK
207
62
DRIVE ENABLE
NOTE
ENCODER/ANALOG FEEDBACK SELECTION USED ANALOG TACH FEEDBACK FOR THE PROPORTIONAL TERM OF THE SPEED LOOP PI, AND ENCODER FEEDBACK FOR THE INTEGRAL TERM. THIS FEEDBACK SELECTION REQUIRES A COMBINATION ANALOG TACH/ ENCODER FITTED TO THE MOTOR.
THIS SELECTION CANNOT BE USED WHEN 590 SWITCHABLE TACHO CARD IS FITTED.
47 SPEED FBK SELECT
ARM VOLTS
ARM VOLTS
ANALOG TACH
ENCODER
+
-
ENCODER/ANALOG SEE NOTE
49 ENCODER SIGN
POSITIVE
FROM CALIBRATION
ZERO SPD OFFSET FROM CALIBRATION

SRAMP

This function block limits the rate of change of an input by limiting the acceleration and the jerk (rate of change of acceleration).

MMI Menu Map

1 SETUP PARAMETERS
2 SRAMP
- INPUT
- RATE SELECT
- >> RATE SET 0
- >> RATE SET 1
- AUTO RESET
- EXTERNAL RESET
- RESET VALUE
- QUENCH
- AT SPEED LEVEL
- AT SPEED
- ACCEL OUTPUT
- SRAMP OUTPUT

MMI Menu Map

1 SETUP PARAMETERS
2 SRAMP
3 RATE SET 0
- ACCEL 0
- DECEL 0
- ACCEL 0 JERK 1
- ACCEL 0 JERK 2
- DECEL 0 JERK 1
- DECEL 0 JERK 2

MMI Menu Map

1 SETUP PARAMETERS
2 SRAMP
3 RATE SET 1
- ACCEL 1
- DECEL 1
- ACCEL 1 JERK 1
- ACCEL 1 JERK 2
- DECEL 1 JERK 1
- DECEL 1 JERK 2

FUNCTION BLOCKS\SETPOINT FUNCS\SRAMP

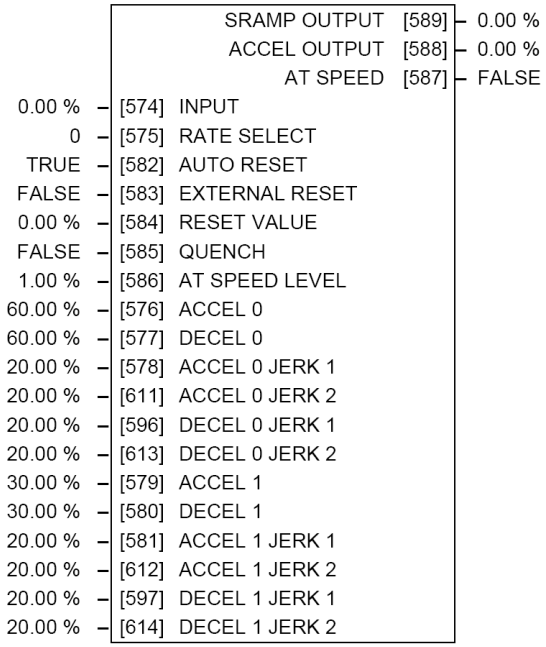

SRAMP

Parameter	Tag	Range
INPUT	**574**	**-100.00 to 100.00 %**
Input value.		
RATE SELECT	**575**	**0 to 1**
Selects between one of two parameter sets. This allows you to have two operating modes (RATE SET 0 or RATE SET 1) with independent ramp parameters.		
AUTO RESET	**582**	**FALSE / TRUE**
The ramp is reset automatically when the drive is enabled if set to TRUE.		
EXTERNAL RESET	**583**	**FALSE / TRUE**
Resets the ramp output.		

SRAMP

Parameter	Tag	Range
RESET VALUE	**584**	**-100.00 to 100.00 %**
The output value while RESET is TRUE also used as initial value on start up. If this is linked to speed feedback, the initial ramp output will be set to the current value of speed feedback.		
QUENCH	**585**	**FALSE / TRUE**
If TRUE forces the ramp input to zero.		
AT SPEED LEVEL	**586**	**0.00 to 100.00 %**
Threshold for AT SPEED diagnostic output.		
ACCEL 0	**576**	**0.00 to 100.00 %**
Acceleration rate, in units of percent per second^2. i.e. 75.00 % means that the maximum acceleration will be 75.00% per second^2 if the full speed of the machine is 1.25ms then the acceleration will be 1.25 * 75.0% = 0.9375ms^2 .		
DECEL 0	**577**	**0.00 to 100.00 %**
Deceleration rate, only active if SYMMETRIC = TRUE.		
ACCEL 0 JERK 1	**578**	**0.00 to 100.00 %**
Rate of change of acceleration, in units of percent per second^3. For example: 75.00 % means that the maximum acceleration will be 50.00% per second^3 if the full speed of the machine is 1.25ms then the acceleration will be 1.25 * 50.0% = 0.625ms3. If SYMMETRIC = TRUE then this value will be used for each of the four segments of the profile. If SYMMETRIC = TRUE then this value will be used only for the first acceleration segment.		
ACCEL 0 JERK 2	**611**	**0.00 to 100.00 %**
Rate of change of acceleration in units of percent per second^3 for segment 2. Only applicable if SYMMETRIC = FALSE.		
DECEL 0 JERK 1	**596**	**0.00 to 100.00 %**
Rate of change of acceleration in units of percent per second^3 for segment 3. Only applicable if SYMMETRIC = FALSE.		
DECEL 0 JERK 2	**613**	**0.00 to 100.00 %**
Rate of change of acceleration in units of percent per second^3 for segment 4. Only applicable if SYMMETRIC = FALSE.		
ACCEL 1	**579**	**0.00 to 100.00 %**
Refer to ACCEL 0.		
DECEL 1	**580**	**0.00 to 100.00 %**
Refer to DECEL 0.		
ACCEL 1 JERK 1	**581**	**0.00 to 100.00 %**
Refer to ACCEL 0 JERK 1.		

SRAMP

Parameter	Tag	Range
ACCEL 1 JERK 2 Refer to ACCEL 0 JERK 2.	**612**	**0.00 to 100.00 %**
DECEL 1 JERK 1 Refer to DECEL 0 JERK 1.	**597**	**0.00 to 100.00 %**
DECEL 1 JERK 2 Refer to DECEL 0 JERK 2.	**614**	**0.00 to 100.00 %**
SRAMP OUTPUT Diagnostic, ramp output.	**589**	**— .xx %**
ACCEL OUTPUT Accleration diagnostic.	**588**	**— .xx %**
AT SPEED Diagnostic output indicating the Abs (input - output) is less than AT SPEED LEVEL.	**587**	**FALSE / TRUE**

Useful Equations

NOTE **These only hold true if Jerk = Jerk2 for acceleration or Jerk 3 = Jerk 4 for deceleration.**

V is the maximum speed the drive must reach.
In % / sec

A is the maximum allowable acceleration in %/sec^2

J is the maximum allowable value for jerk, in %/sec^3

The time needed to stop or accelerate is:

$$t = \frac{V}{A} + \frac{A}{J} \text{ [Seconds]}$$

as the speed is symmetrical the average speed is V/2, therefore the stopping / acceleration distance can be calculated.

$$s = \frac{V}{2}\left(\frac{V}{A} + \frac{A}{J}\right) \text{ [Meters]}$$

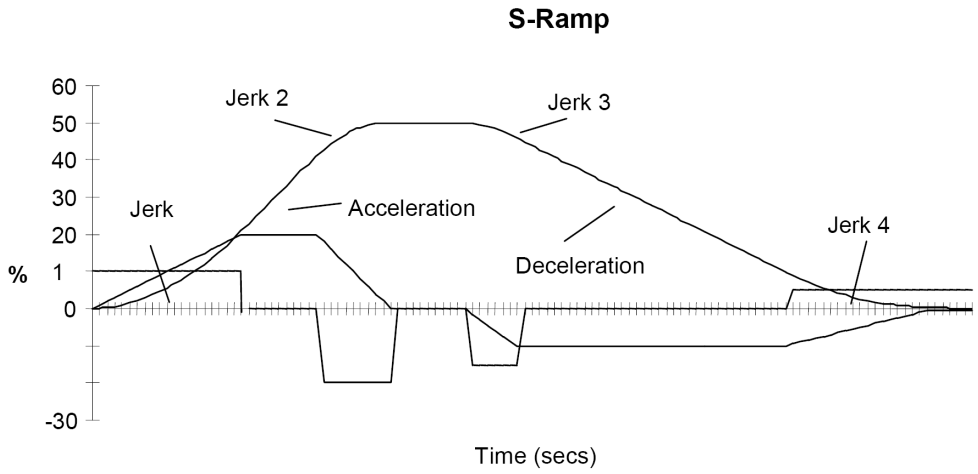

Example acceleration graph for a velocity 60 %/s maximum Acceleration of 20 %/s^2 and a jerk of 10 %/s^3

STANDSTILL

MMI Menu Map

1 SETUP PARAMETERS
2 STANDSTILL
- STANDSTILL LOGIC
- ZERO THRESHOLD

MMI Menu Map

1 FUNCTION BLOCKS
2 SEQ & REF
3 STANDSTILL
- ZERO SETPOINT

MMI Menu Map

1 DIAGNOSTICS
- AT ZERO SPEED
- AT ZERO SETPOINT
- AT STANDSTILL

Set a ZERO THRESHOLD defining when the speed setpoint is at zero to inhibit motor rotation.

FUNCTION BLOCKS\SEQ & REF\STANDSTILL

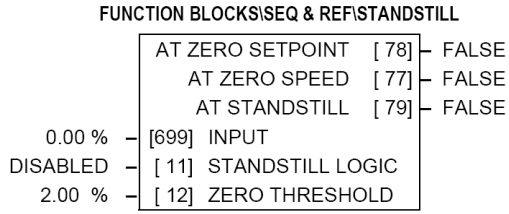

The inputs to this block are SPEED FEEDBACK from the SPEED LOOP function block and SPEED SETPOINT from setpoints.

The outputs are AT ZERO SPEED, AT STANDSTILL, and AT ZERO SETPOINT. AT ZERO SPEED is connected to DIGOUT 1 (B5) in the default configuration. A "not at standstill" signal is sent to the drive enable logic.

When SPEED FEEDBACK is less than ZERO THRESHOLD, AT ZERO SPEED is TRUE.
When SPEED SETPOINT is less than ZERO THRESHOLD, AT ZERO SETPOINT is TRUE.
When both AT ZERO SPEED and AT ZERO SETPOINT are TRUE, AT STANDSTILL is TRUE signalling the motor has stopped.

If AT STANDSTILL is TRUE and STANDSTILL LOGIC is ENABLED, then the speed and current loops are quenched. The SCR (Silicon Controlled Rectifier)/thyristor firing circuits are disabled, the main contactor remains energised and the RUN LED stays on when the drive is at standstill. The drive remains in this state until standstill drops out. That is, when the speed setpoint or speed feedback rise above the zero threshold.

STANDSTILL LOGIC is useful in maintaining absolute zero speed and aids in preventing gearbox wear due to “chattering”.

However, it can cause problems in web handling applications using tension feedback: at zero speed, the SCR/thyristors turn off allowing the web tension to pull the driven roll in reverse. When the drive no longer senses it is at zero speed, the SCR/thyristors turn back on causing the motor to move forward and regulate tension. An oscillation condition can result as the drives SCR/thyristors turn on and off trying to maintain a fixed position.

STANDSTILL

Parameter	Tag	Range
ZERO SETPOINT	**699**	**-300.00 to 300.00 %**
The input to the standstill function. By default this is connected to the speed demand parameter from the speed loop function block.		
STANDSTILL LOGIC	**11**	**DISABLED / ENABLED**
If ENABLED, the Drive is quenched (although the contactor remains in) when the Speed Feedback and Speed Setpoint values are less than ZERO THRESHOLD.		
ZERO THRESHOLD	**12**	**0.00 to 100.00 %**
Threshold level which defines zero setpoint and zero speed diagnostic outputs and also controls the zero speed relay output.		
AT ZERO SETPOINT	**78**	**FALSE / TRUE**
Logic output, TRUE when INPUT is below ZERO THRESHOLD. There is hysteresis of 0.5% on this test.		
AT ZERO SPEED	**77**	**FALSE / TRUE**
Logic output, TRUE when speed feedback is below ZERO THRESHOLD. There is hysteresis of 0.5% on this test. The speed feedback parameter is internally connected to the PERCENT RPM parameter in the FEEDBACKS block.		

STANDSTILL

Parameter	Tag	Range
AT STANDSTILL	**79**	**FALSE / TRUE**

Logic output that is TRUE when standstill is detected.

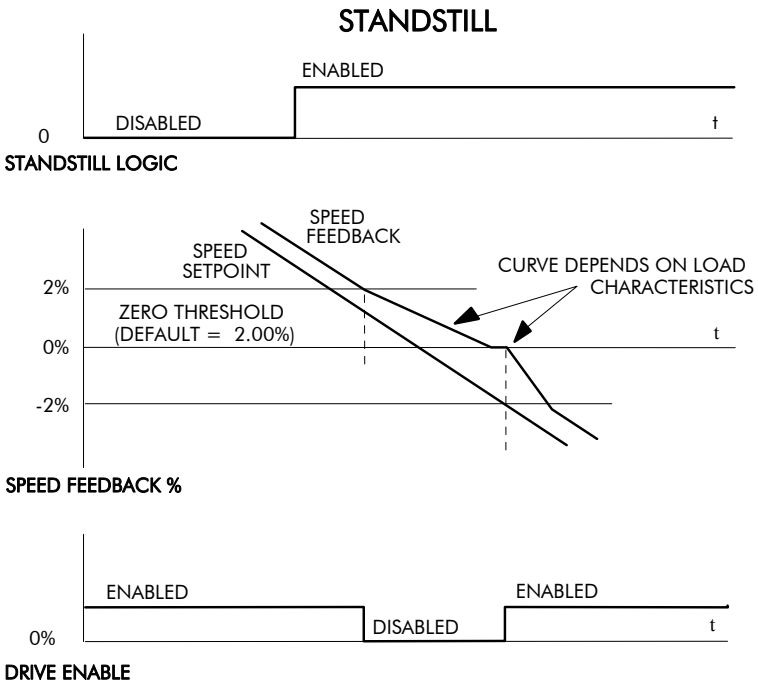

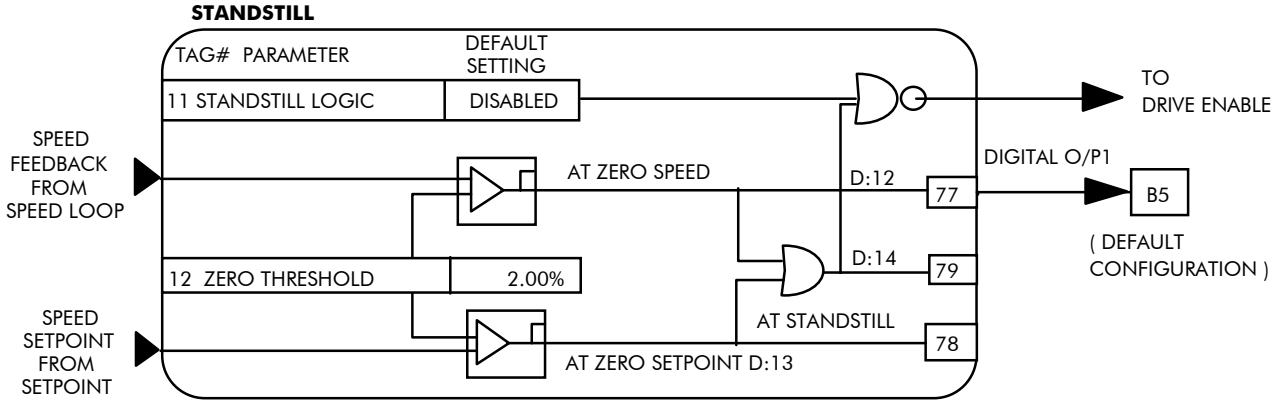

STOP RATES

MMI Menu Map

1 SETUP PARAMETERS

2 STOP RATES
- STOP TIME
- STOP LIMIT
- CONTACTOR DELAY
- CURR DECAY RATE
- PROG STOP TIME
- PROG STOP LIMIT
- PROG STOP I LIM
- STOP ZERO SPEED

These parameters are used by a regenerative drive when stopping with Normal Stop or Program Stop.

The stopping methods of the drive are described in more detail in Chapter 4: “Operating the Drive” - Starting and Stopping Methods.

The internal inputs to this block are SPEED SETPOINT and SPEED FEEDBACK from the SPEED LOOP function block, the Run signal from terminal C3, and PROGRAM STOP from terminal B8.

The internal outputs are SPEED DEMAND to the speed loop, PROG STOP I LIM to the current loop, and signals to the coast stop and drive enable logic.

FUNCTION BLOCKS\SEQ & REF\STOP RATES

10.0	s	[27]	STOP TIME
60.0	s	[217]	STOP LIMIT
1.0	s	[302]	CONTACTOR DELAY
0.00	–	[594]	CURR DECAY RATE
0.1	s	[26]	PROG STOP TIME
60.0	s	[216]	PROG STOP LIMIT
100.00	%	[91]	PROG STOP I LIM
2.00	%	[29]	STOP ZERO SPEED

Normal Stop

A Normal Stop occurs when the Run signal is removed from terminal C3. It ramps the speed demand to zero at a rate set by STOP TIME.

- Non-regenerative drives can stop no faster than the coast stop rate.
- Regenerative drives use STOP TIME to set the duration of the stop.

After the stop, the contactor de-energises and the drive disables.

The STOP LIMIT timer starts when C3 goes to 0V (the Run signal is removed). If the drive speed has not reached STOP ZERO SPEED within the STOP LIMIT time, the contactor de-energises and the drive disables.

During Normal Stops, after the motor reaches zero speed, CONTACTOR DELAY delays the de-energising of the contactor. When STOP ZERO SPEED is set above 0.25% and the CURRENT DECAY RATE is not zero, the drive disables during the contactor delay. Otherwise the drive disables after the contactor delay. This is useful when using the Jog function to prevent multiple operations of the contactor. CONTACTOR DELAY is overridden when terminal C5 (Enable Input) is at 0V.

Program Stop

PROGRAM STOP provides a controlled fast stop for regenerative drives. The stop time is set by PROG STOP TIME. This timer starts once terminal B8 (Program Stop) goes to 0V. When the drive reaches STOP ZERO SPEED, the contactor de-energises and the drive disables. PROG STOP LIMIT sets the maximum time the Program Stop can take before the contactor de-energises and the drive disables.

PROG STOP I LIM sets the current limit in the current loop during a Program Stop. Other current limits can override it.

STOP RATES

Parameter	Tag	Range
STOP TIME	**27**	**0.1 to 600.0 s**
Time to reach zero speed from 100% set speed in normal stop mode (terminal C3 = 0V).		
STOP LIMIT	**217**	**0.0 to 600.0 s**
The maximum time a controlled stop can take in a Normal Stop (regenerative breaking) before the drive will coast to stop. The timer is triggered when terminal C3 = 0V.		
CONTACTOR DELAY	**302**	**0.1 to 600.0 s**
This defines the time the contactor stays energised for after the STOP ZERO SPEED limit is reached. **Maintain zero speed during contactor delay.**		
CURR DECAY RATE	**594**	**0.00 to 200.00**
This is the rate at which the current is quenched when the current loop is disabled.		
PROG STOP TIME	**26**	**0.1 to 600.0 s**
Time to reach zero speed from 100% set speed in Program Stop mode (B8 = 0V).		
PROG STOP LIMIT	**216**	**0.0 to 600.0 s**
The maximum time a Program Stop (regenerative breaking) can take before the contactor is de-energised and the drive is disabled. The timer is triggered when terminal B8 = 0V.		
PROG STOP I LIM	**91**	**0.00 to 200.00 %**
Main current limit level (assuming current limit not overridden by I Profile or Inverse Time limits) when performing a Program Stop.		
STOP ZERO SPEED	**29**	**0.00 to 100.00 %**
The threshold at which the CONTACTOR DELAY timer starts in Program Stop and Normal Stop modes. See also CONTACTOR DELAY above.		

Functional Description

Stop Hierarchy

Coast Stop - Terminal B9
- Disables the drive and opens the contactor via the pilot output

Enable - Terminal C5
- Suspends and resets the Control Loops

Program Stop - Terminal B8
- Independent ramp time
- Stop Timer
- Independent Current Limit that may be higher than normal Current Limit
- Independent zero speed

Normal Run/Stop - Terminal C3
- Independent ramp time
- Contactor Delay

The Drive's reaction to commands is defined by a state machine. This determines which commands provide the demanded action, and in which sequence. Consequently, COAST STOP and PROGRAM STOP must be FALSE, i.e. the drive is not in Coast or Program mode, before a Run signal is applied otherwise the controller assumes a Stop mode and remains disabled. Refer to Chapter 4: "Operating the Drive" - Stopping Methods for descriptions of Coast Stop and Program Stop.

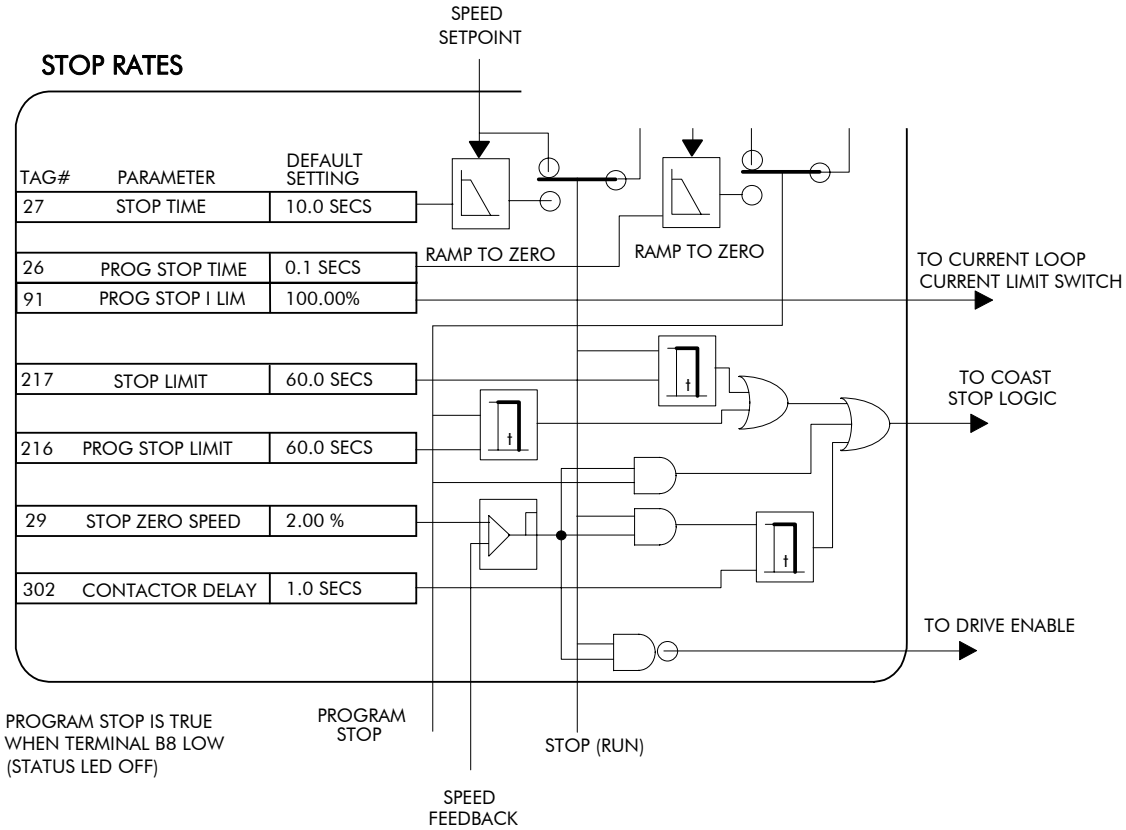

TEC OPTION

MMI Menu Map

1 SERIAL LINKS

2 TEC OPTION
- TEC OPTION TYPE
- TEC OPTION IN 1
- TEC OPTION IN 2
- TEC OPTION IN 3
- TEC OPTION IN 4
- TEC OPTION IN 5
- TEC OPTION FAULT
- TEC OPTION VER
- TEC OPTION OUT 1
- TEC OPTION OUT 2

This function block is used to configure the inputs and outputs of the various Technology Options that can be fitted.

The Technology Option provides a communications interface for external control of the Drive.

Refer to the appropriate Technology Option Technical Manual supplied with the option for further details.

FUNCTION BLOCKS\COMMUNICATIONS\TEC OPTION

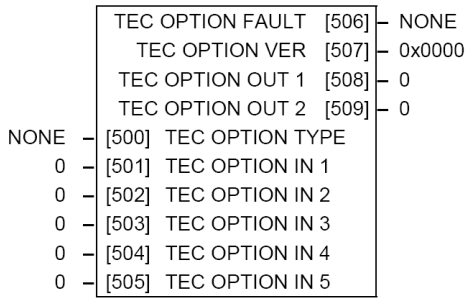

TEC OPTION

Parameter	Tag	Range
TEC OPTION TYPE	**500**	**See below**

Selects the type of Technology Option.

0 : NONE	10 : TYPE 10
1 : RS485	11 : TYPE 11
2 : PROFIBUS	12 : TYPE 12
3 : LINK	13 : TYPE 13
4 : DEVICE NET	14 : TYPE 14
5 : CAN OPEN	15 : TYPE 15
6 : LONWORKS	
7 : CONTROLNET	
8 : MODBUS PLUS	
9 : ETHERNET	

TEC OPTION IN 1 to TEC OPTION IN 5	**501, 502, 503, 504, 505**	**-32768 to 32767**

The use of these input parameters depends upon the type of Technology Option fitted. Refer to the Technology Option Technical Manual.

TEC OPTION

Parameter	Tag	Range
TEC OPTION FAULT	**506**	**See below**

The fault state of the Technology Option.

0 : NONE	no faults
1 : PARAMETER	parameter out-of-range
2 : TYPE MISMATCH	TYPE parameter mismatch
3 : SELF TEST	hardware fault - internal
4 : HARDWARE	hardware fault - external
5 : MISSING	no option fitted

If the VERSION NUMBER error message is displayed, the Technology Option is using software that doesn't fully support the drive; refer to Parker SSD Drives.

TEC OPTION VER	**507**	**0x0000 to 0xFFFF**

The version of the Technology Option. If no option is fitted then the version is reset to zero.

TEC OPTION OUT 1 to TEC OPTION OUT 2	**508, 509**	**— .**

The use of these output parameters depends upon the type of Technology Option fitted. Refer to the Technology Option Technical Manual.

TORQUE CALC.

MMI Menu Map

1 SETUP PARAMETERS
2 SPECIAL BLOCKS
3 TORQUE CALC.
- TORQUE DEMAND
- TENSION ENABLE
- OVER WIND

MMI Menu Map

1 SYSTEM
2 CONFIGURE I/O
3 BLOCK DIAGRAM
- POS. I CLAMP
- NEG. I CLAMP

This block switches the drive between Speed and Tension mode. It also switches the current limits as required for over and under winding.

FUNCTION BLOCKS\WINDER\TORQUE CALC.

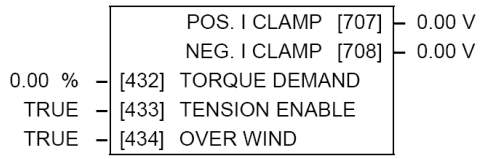

TORQUE CALC.

Parameter	Tag	Range
TORQUE DEMAND	**432**	**-200.00 to 200.00 %**
This is the TORQUE CALC function block input.		
TENSION ENABLE	**433**	**DISABLED / ENABLED**
When TENSION ENABLE is ENABLED , the tension demand is set by the TORQUE DEMAND signal , tag 432. When DISABLED, it is set by the default current limit. Switch using a free digital input.		
OVER WIND	**434**	**DISABLED / ENABLED**
Reverses the sign of the output clamps for over/under winding. Switch using a free digital input.		
POS. I CLAMP	**707**	**— .xx V**
Positive current clamp.		
NEG. I CLAMP	**708**	**— .xx V**
Negative current clamp		

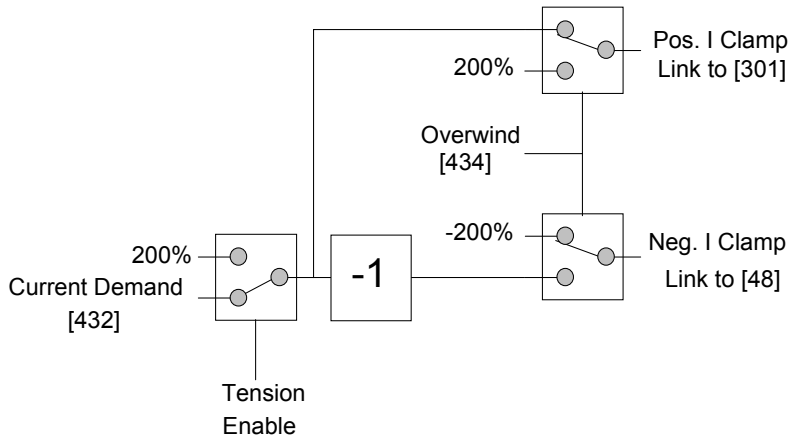

VALUE FUNC

The value function blocks can be configured to perform one of a number of functions upon a fixed number of inputs.

Boolean inputs and outputs are

Outputs:

FALSE = 0.00
TRUE = 0.01

Inputs:

-0.005 < x < 0.005 = FALSE,
Else TRUE

MMI Menu Map

1	FUNCTION BLOCKS
2	MISCELLANEOUS
3	VALUE FUNC
4	VALUE FUNC 1
4	VALUE FUNC 2
4	VALUE FUNC 3
4	VALUE FUNC 4
4	VALUE FUNC 5
4	VALUE FUNC 6
4	VALUE FUNC 7
4	VALUE FUNC 8
4	VALUE FUNC 9
4	VALUE FUNC 10

- INPUT A
- INPUT B
- INPUT C
- TYPE
- OUTPUT

FUNCTION BLOCKS\MISCELLANEOUS\VALUE FUNC\VALUE FUNC 1

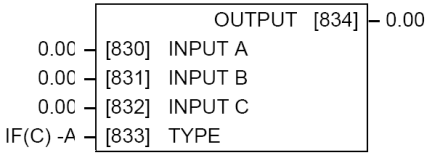

FUNCTION BLOCKS\MISCELLANEOUS\VALUE FUNC\VALUE FUNC 2

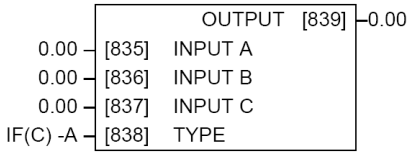

FUNCTION BLOCKS\MISCELLANEOUS\VALUE FUNC\VALUE FUNC 3

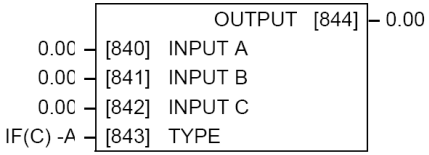

FUNCTION BLOCKS\MISCELLANEOUS\VALUE FUNC\VALUE FUNC 4

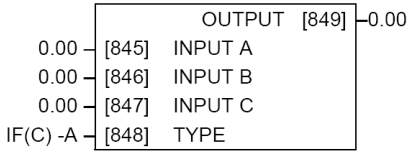

FUNCTION BLOCKS\MISCELLANEOUS\VALUE FUNC\VALUE FUNC 5

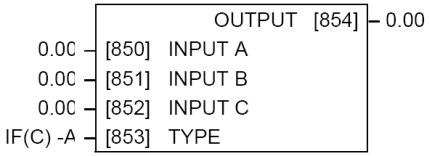

FUNCTION BLOCKS\MISCELLANEOUS\VALUE FUNC\VALUE FUNC 6

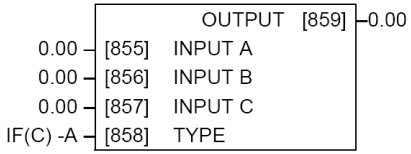

FUNCTION BLOCKS\MISCELLANEOUS\VALUE FUNC\VALUE FUNC 7

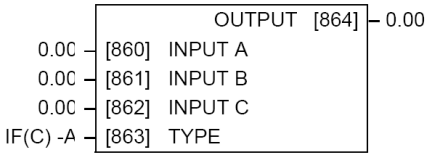

FUNCTION BLOCKS\MISCELLANEOUS\VALUE FUNC\VALUE FUNC 8

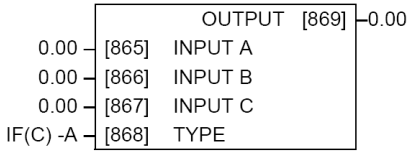

FUNCTION BLOCKS\MISCELLANEOUS\VALUE FUNC\VALUE FUNC 9

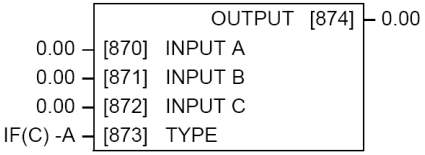

FUNCTION BLOCKS\MISCELLANEOUS\VALUE FUNC\VALUE FUNC 10

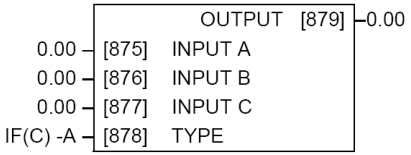

VALUE FUNCTION

Parameter	Tag	Range
INPUT A General purpose input.	**830, 835, 840, 845, 850, 855, 860, 865, 870, 875**	**-32768 to 32768**
INPUT B General purpose input.	**831, 836, 841, 846, 851, 856, 861, 866, 871, 876**	**-32768 to 32768**
INPUT C General purpose input.	**832, 837, 842, 847, 852, 857, 862, 867, 872, 877**	**-32768 to 32768**
TYPE The operation to be performed on the three inputs to produce the output value.	**833, 838, 843, 848, 853, 858, 863, 868, 873, 878**	**See below**
0: IF(C) -A 1: ABS(A+B+C) 2: SWITCH(A,B) 3: (A*B)/C 4: A+B+C 5: A-B-C 6: B<=A<=C 7: A>B+/-C 8: A>=B 9: ABS(A)>B+/-C 10: ABS(A)>=B 11: A(1+B) 12: IF(C) HOLD(A) 13: BINARY DECODE 14: ON DELAY 15: OFF DELAY	16: TIMER 17: MINIMUM PULSE 18: PULSE TRAIN 19: WINDOW 20: UP/DWN COUNTER 21: (A*B)/C ROUND 22: WINDOW NO HYST 23: WIND A>=B,A<=C 24: A<=B 25: ((A*B)/100)+C 26: MIN(A,B,C) 27: MAX(A,B,C) 28: PROFILE SQRT 29: PROFILE LINEAR 30: PROFILE x^2	31: PROFILE x^3 32: PROFILE x^4 33: ON A>B, OFF A<C 34: (A+B) CLAMPED C 35: (A-B) CLAMPED C 36: (A*B) CLAMPED C 37: (A/B) CLAMPED C 38: A>=B:A, A<=C:0 39: (A * B) + C 40: A * (B + C) 41: A * (B - C) 42: A * (1+B/C) 43: A * (1+(B * C)) 44: MONOSTABLE HIGH 45: MONOSTABLE LOW 46: FILTER
OUTPUT The result of performing the selected operation on the inputs.	**834, 839, 844, 849, 854, 859, 864, 869, 874, 879**	**— .xx**

Functional Description

OUTPUT is generated from the inputs according to the operation type selected. The output is always limited to be within the range -32768.00 to +32767.00.

Operation	Description
IF(C) -A	If INPUT C is not zero the OUTPUT is minus INPUT A, otherwise the OUTPUT is the same as INPUT A.
ABS(A+B+C)	The OUTPUT is set to the absolute value of INPUT A + INPUT B + INPUT C.
SWITCH(A,B)	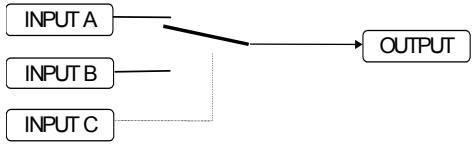 If INPUT C is zero the OUTPUT is set to INPUT A, otherwise the output is set to INPUT B
(A*B)/C	The OUTPUT is set to (INPUT A * INPUT B) / (INPUT C). The algorithm compensates for the remainder term.
A+B+C	The OUTPUT is set to (INPUT A + INPUT B + INPUT C).
A-B-C	The OUTPUT is set to (INPUT A - INPUT B - INPUT C).
B <= A <= C	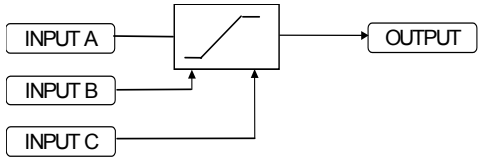 The OUTPUT is set to the value of INPUT A, limited to between a maximum value of INPUT C and a minimum value of INPUT B. If INPUT B is greater than INPUT C the output is undefined.
A>B+/-C	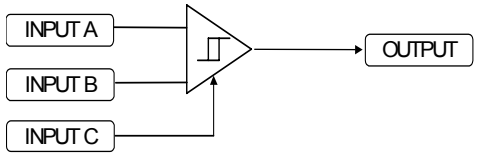 The OUTPUT is TRUE if INPUT A is greater than INPUT B + INPUT C. The OUTPUT is FALSE if INPUT A is less than INPUT B - INPUT C. Otherwise the OUTPUT is unchanged. In this way the block acts as a simple comparator with a comparison level of INPUT B and a hysteresis band equal to +/- INPUT C.
A>=B	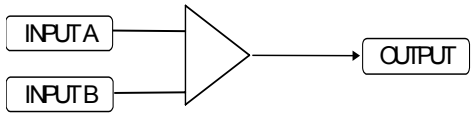 The OUTPUT is TRUE if INPUT A is greater than or equal to INPUT B, otherwise the OUTPUT is FALSE.

Operation	Description
ABS(A)> ABS(B)+/-C	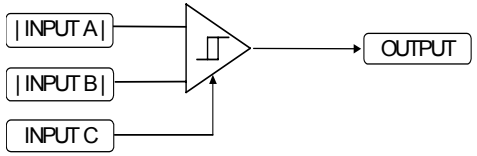 The OUTPUT is TRUE if the magnitude of INPUT A is greater than or equal to the magnitude of INPUT B - INPUT C. The OUTPUT is FALSE if the magnitude of INPUT A is less than the magnitude of INPUT B - INPUT C. Otherwise the OUTPUT is unchanged. In this way the block acts as a magnitude comparator with a comparison level of INPUT B and a hysteresis band equal to +/- INPUT C.
ABS(A)> =ABS(B)	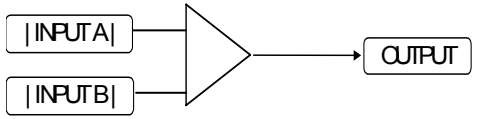 The OUTPUT is TRUE if the magnitude of INPUT A is greater than or equal to the magnitude of INPUT B, otherwise the OUTPUT is FALSE.
A(1+B)	The OUTPUT is set to INPUT A + (INPUT A * INPUT B / 100.00).
IF(C) HOLD A	If INPUT C is zero, the OUTPUT is set to INPUT A, otherwise the OUTPUT is unchanged. On powering up the drive, the output will be pre-loaded with the last saved value of input B.
BINARY DECODE	The OUTPUT is set according to which of the INPUTs are non-zero. INPUT C / INPUT B / INPUT A / OUTPUT 0 / 0 / 0 / 0.00 0 / 0 / ≠0 / 1.00 0 / ≠0 / 0 / 2.00 0 / ≠0 / ≠0 / 3.00 ≠0 / 0 / 0 / 4.00 ≠0 / 0 / ≠0 / 5.00 ≠0 / ≠0 / 0 / 6.00 ≠0 / ≠0 / ≠0 / 7.00 In the above table, ≠0 indicates that the corresponding input is not zero.

Operation	Description
ON DELAY	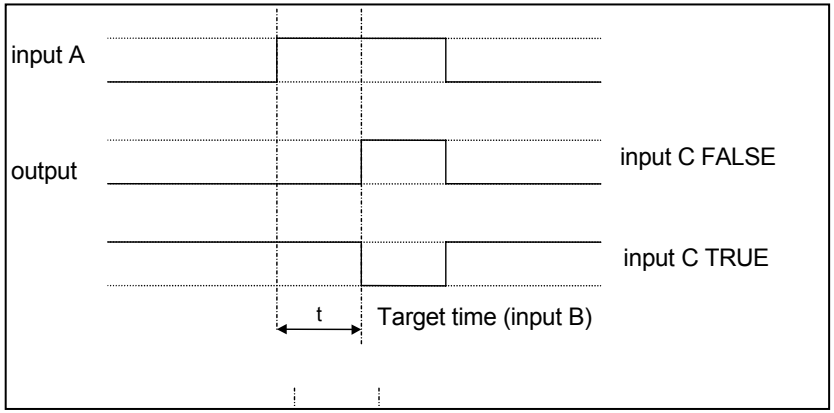 A programmable delay between receiving and outputting a Boolean TRUE signal. INPUT A becoming TRUE starts the delay timer. INPUT B sets the duration of the delay in seconds (1 = 1 second). At the end of the duration, OUTPUT becomes TRUE unless INPUT A has reverted to FALSE. Setting INPUT C to TRUE (≠0) inverts the output.
OFF DELAY	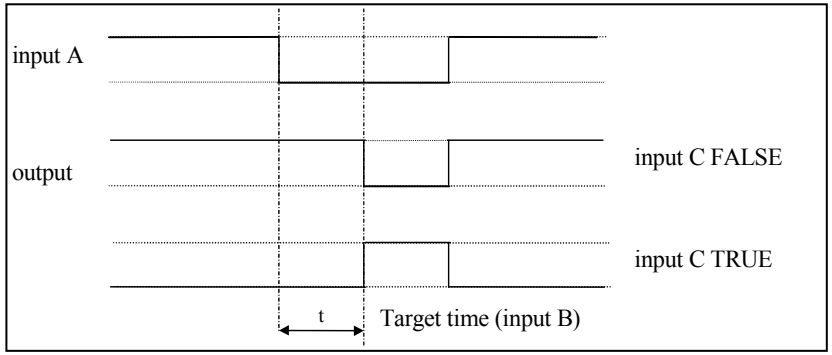 A programmable delay between receiving and outputting a Boolean FALSE signal. INPUT A becoming FALSE starts the delay timer. INPUT B sets the duration of the delay in seconds (1 = 1 second). Setting INPUT C to TRUE (≠0) inverts the output. At the end of the duration, OUTPUT becomes FALSE unless INPUT A has reverted to TRUE.

Operation	Description
TIMER	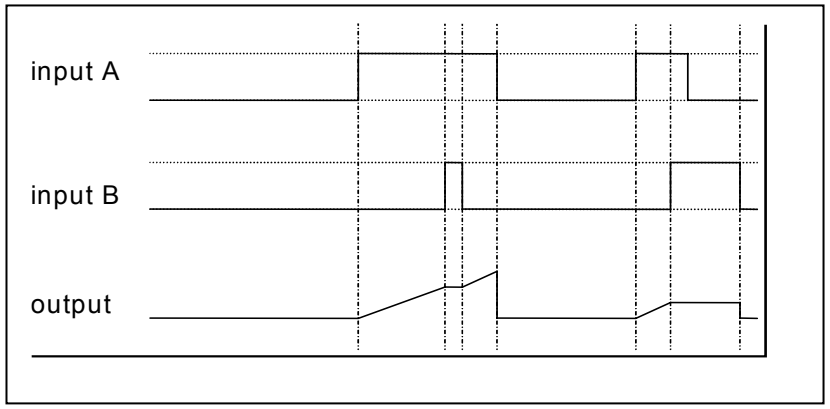 Times the period elapsed from when INPUT A is set TRUE and held TRUE, to when INPUT B becomes TRUE. OUTPUT is the duration of the timer in seconds (1 = 1 second), starting from zero. If INPUT B is TRUE, the value for OUTPUT is held until INPUT B is released. If on release INPUT A is still TRUE, the timer will continue from the held value. Setting INPUT A and INPUT B to FALSE resets the timer. INPUT C is not used.
MINIMUM PULSE	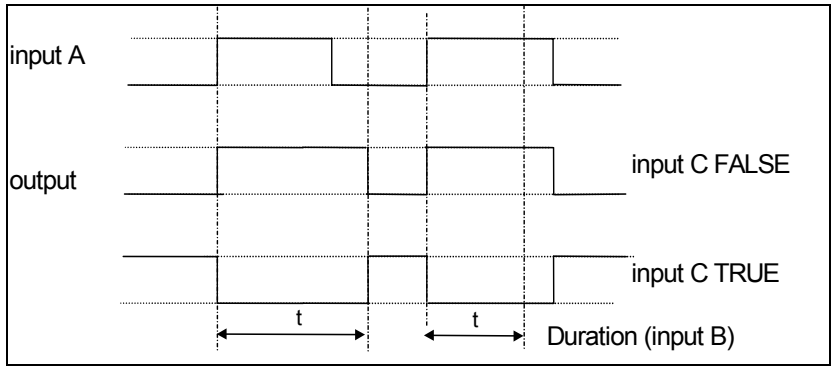 Creates an output of adjustable minimum time when INPUT A is TRUE. (INPUT A is assumed to be a sequence of TRUE pulses and FALSE off periods.) INPUT B sets the length of the minimum pulse required in seconds (1 = 1 second). INPUT C inverts the output when TRUE. The duration of the pulse is *at least* the period set by INPUT B.

Operation	Description
PULSE TRAIN	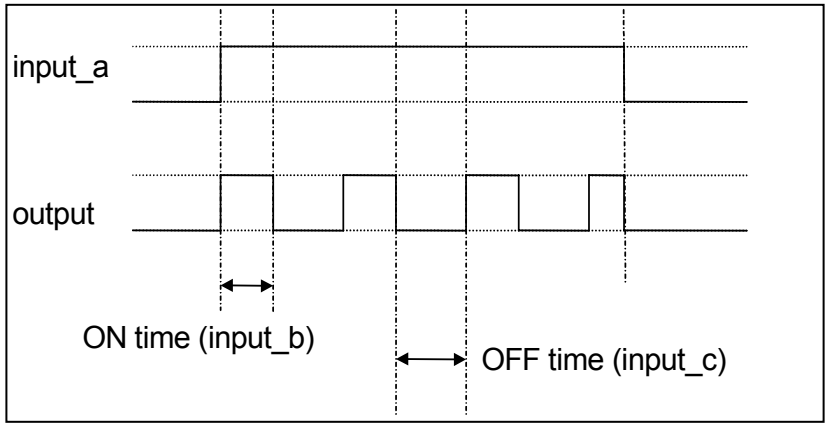 Creates a pulsed FALSE / TRUE output of programmable frequency. INPUT A enables the pulse train when TRUE, disables when FALSE. INPUT B sets the length of the *on* part of the pulse in seconds (1 = 1 second). INPUT C sets the length of the *off* part of the pulse in seconds (1 = 1 second).
WINDOW	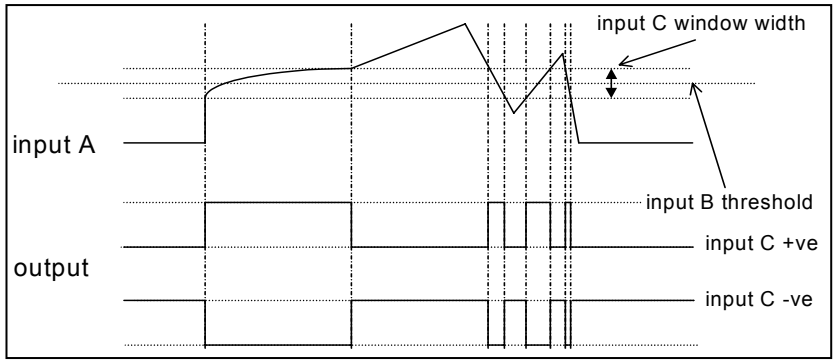 This function outputs TRUE when INPUT A is within a programmable range, and FALSE otherwise. INPUT B sets the threshold of the window to be monitored. INPUT C defines the range of the window around the threshold. When the value of INPUT A is inside the window, the window expands by 0.01 to avoid flutter on output if noisy, i.e. if INPUT B = 5 and INPUT C = 4 then the range is 3 to 7, expanded to 2.5 to 7.5 when the value if INPUT A is inside the window. If INPUT C is set to zero, the output will only be TRUE if INPUT A is exactly equal to INPUT B (this is fulfilled in the default condition when inputs A, B & C are all zero) If INPUT C is set to a negative value, its absolute value defines the window range, and the output is inverted.

Operation	Description
UP/DOWN COUNTER	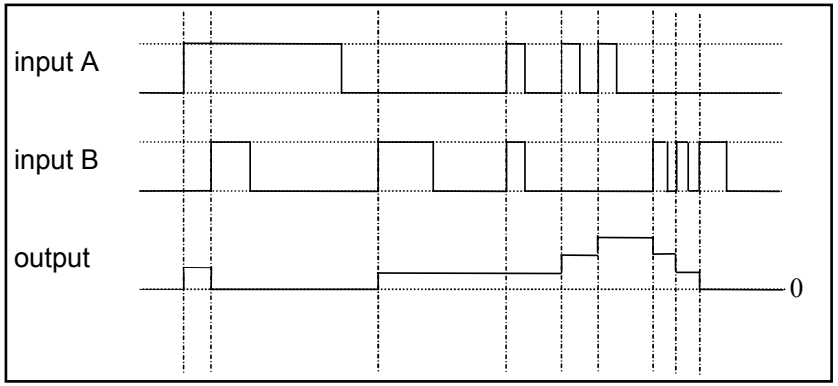 INPUT A provides a rising edge trigger to increment the output count by one. INPUT B provides a rising edge trigger to decrement the output count by one. INPUT C holds the output at zero. The output starts at zero. The output is limited at ±300.00.
(A*B)/C ROUND	The OUTPUT is set to (INPUT A * INPUT B) / (INPUT C). This is the same as (A*B)/C (enumerated value 3) except that the result is rounded.
WINDOW NO HYST	This is the same as WINDOW (enumerated value 19) except that there is no hysteresis when inside the `window'. Thus, from the diagram given in WINDOW, if INPUT B = 5 and INPUT C = 4 then the range is 3 to 7.

Operation	Description
WINDOW B<=A<=C	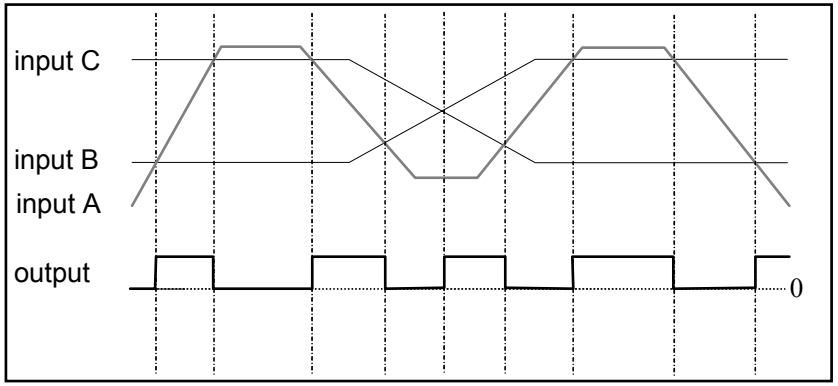 INPUT B and INPUT C are the upper and lower levels of the band. If B<= C and A is in the band then the OUTPUT is TRUE, else OUTPUT is FALSE If C<B and A is in the band then the OUTPUT is FALSE, else OUTPUT is TRUE (i.e. output is inverted) ***Note:*** **OUTPUT is set to FALSE if the TYPE is changed or is in initialisation.**
A<=B	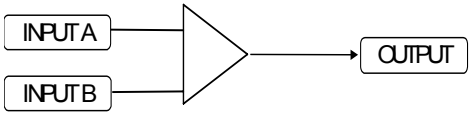 The OUTPUT is TRUE if INPUT A is less than or equal to INPUT B, otherwise the OUTPUT is FALSE.
((A*B)/100)+C	The OUPUT is set to ((INPUT A * INPUT B)/100)+C.
MIN (A,B,C)	The OUTPUT is set to the smallest of INPUT A, INPUT B and INPUT C.
MAX (A,B,C)	The OUTPUT is set to the largest of INPUT A, INPUT B and INPUT C.

Operation	Description
PROFILE SQRT PROFILE X^1 PROFILE X^2 PROFILE X^3 PROFILE X^4	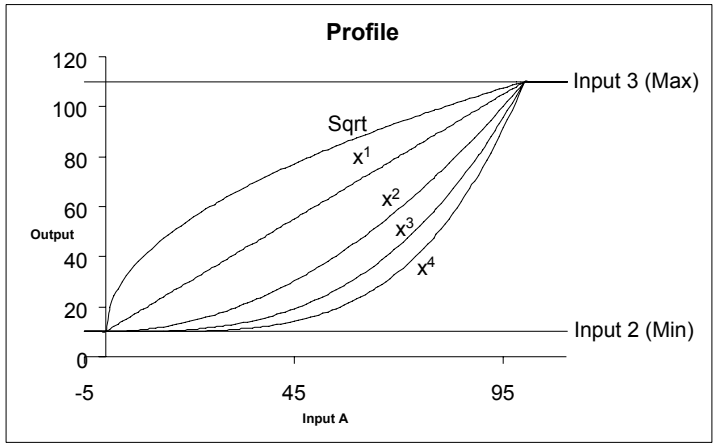

Example : Profile Min = 10, Max = 110

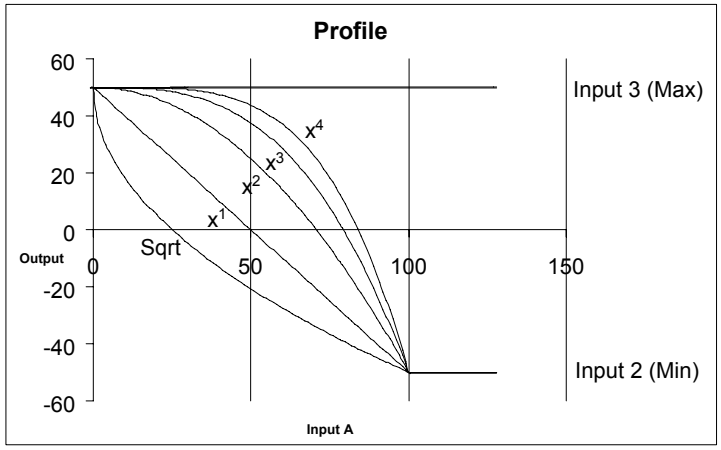

Example : Profile Min = 50, Max = -50

Profile functions convert an input (0-1) to an output with (min) +((max-min) * fn(input)) where fn() is Sqrt (square root), Linear (X^1), X^2, X^3 or X^4. The output is clamped between Min and Max. The input is clamped 0-100.

The profiles are calculated from 100 point tables and linearly interpreted between the points.

PROFILE SQRT $y = \min + (\max - \min)x^{0.5}$ PROFILE X^1 $y = \min + (\max - \min)x$

PROFILE X^2 $y = \min + (\max - \min)x^{2}$ PROFILE X^3 $y = \min + (\max - \min)x^{3}$

PROFILE X^4 $y = \min + (\max - \min)x^{4}$

where INPUT A : Input x INPUT B : Min INPUT C : Max

Operation	Description
FILTER	This is a first order impulse response filter. Input A, the value to be filtered Input B, the time constant in seconds Input C, Reset input.

The Default Application

Block Diagrams

The Drive is supplied with a pre-programmed set of parameters providing for basic speed control.

The following block diagrams show this factory set-up.

If you make any permanent changes to the block diagram, remember to update the non-volatile memory within the Drive by performing a PARAMETER SAVE. Refer to Chapter 6: “The Keypad” - Saving Your Application.

To return to the default application, refer to Chapter 6: “The Keypad” - Resetting to Factory Defaults (2-button reset).

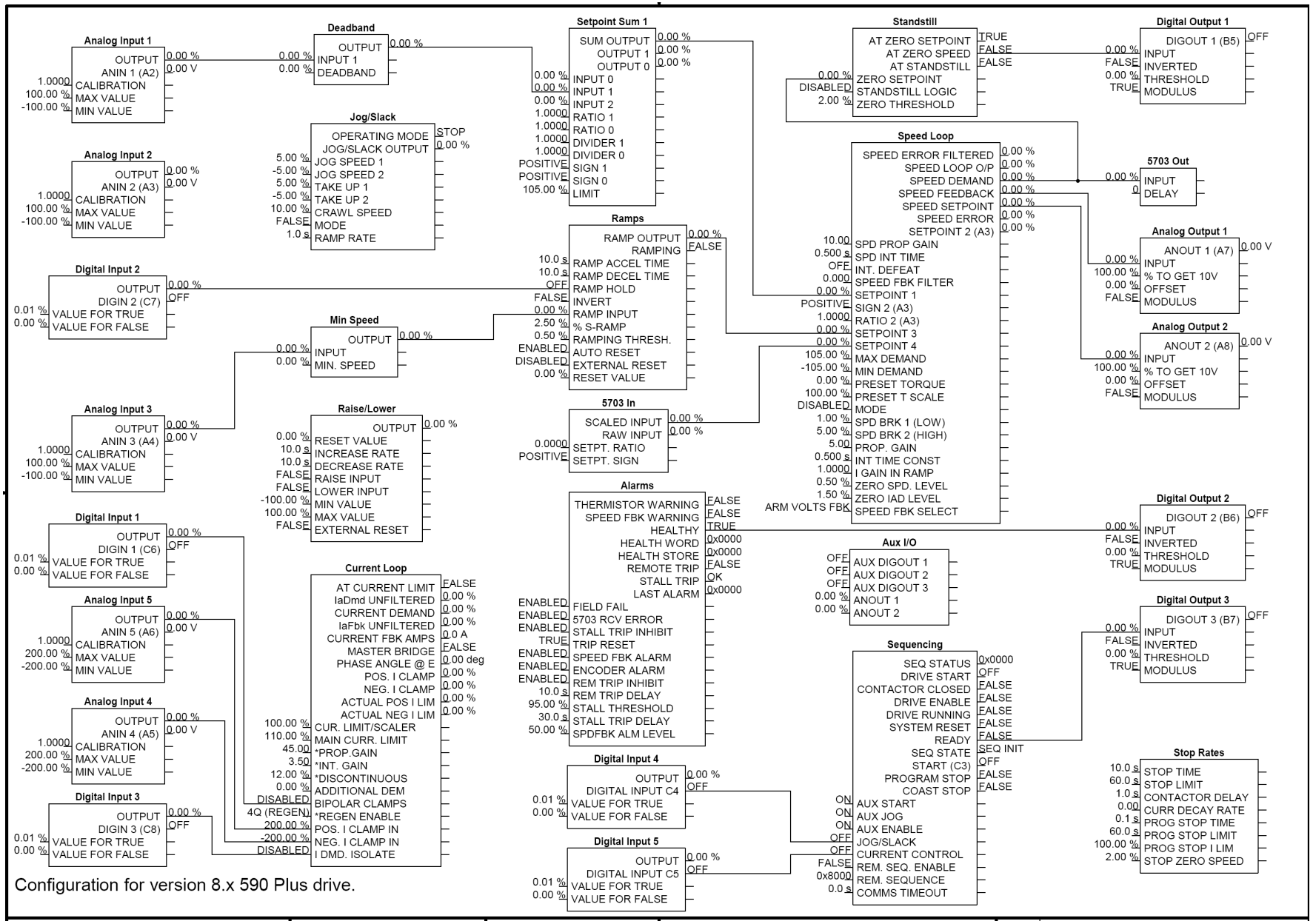

Configuration for version 8.x 590 Plus drive.

Programming Block Diagram - Sheet 1

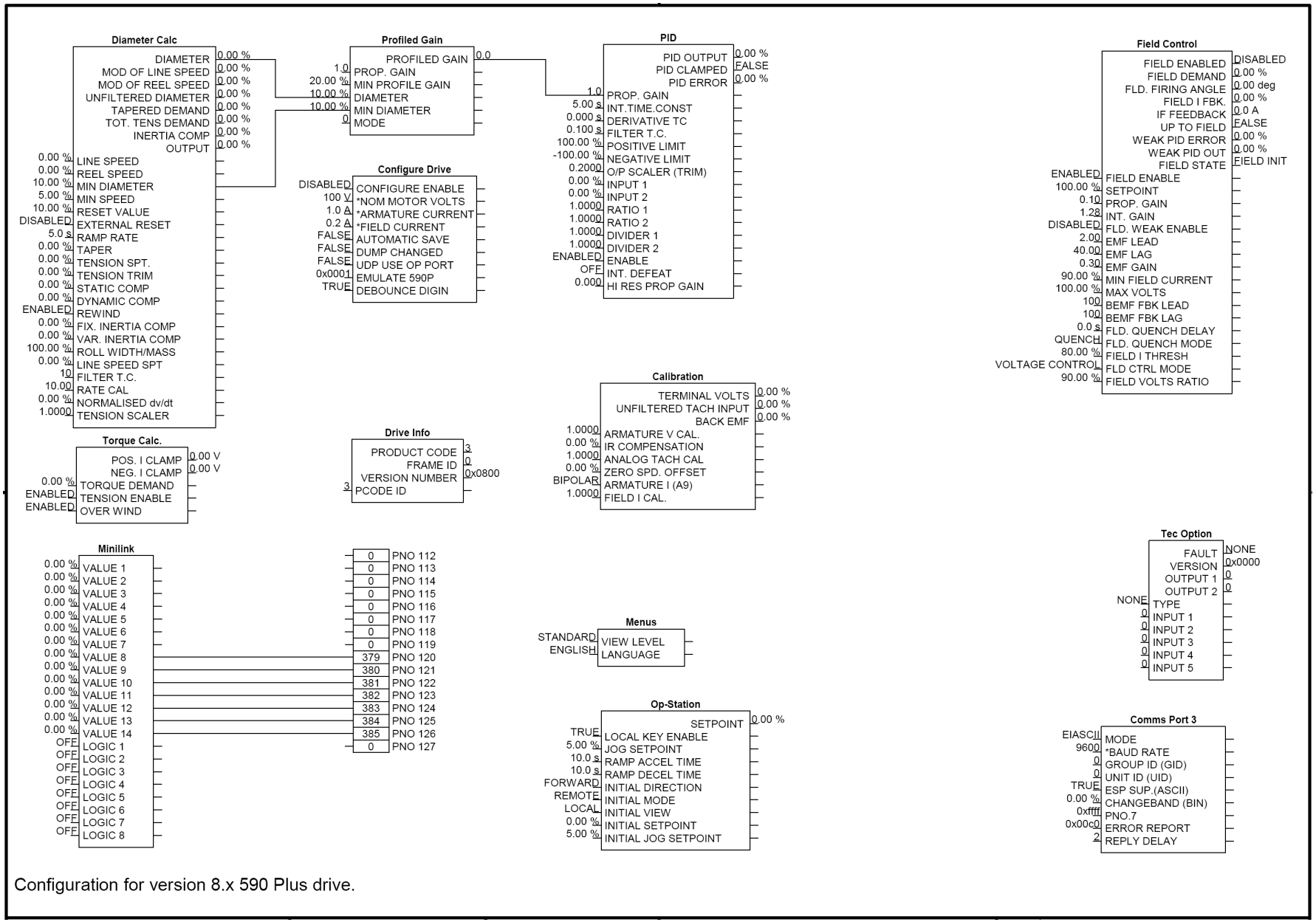

Configuration for version 8.x 590 Plus drive.

Programming Block Diagram - Sheet 2

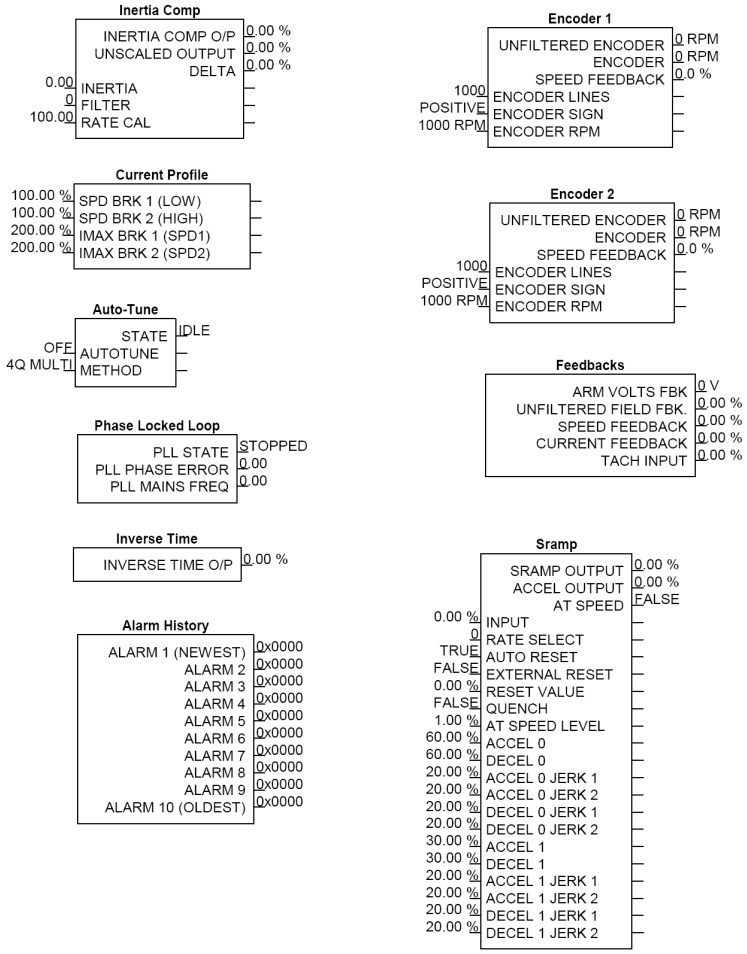

Configuration for version 8.x 590 Plus drive.

Programming Block Diagram - Sheet 3

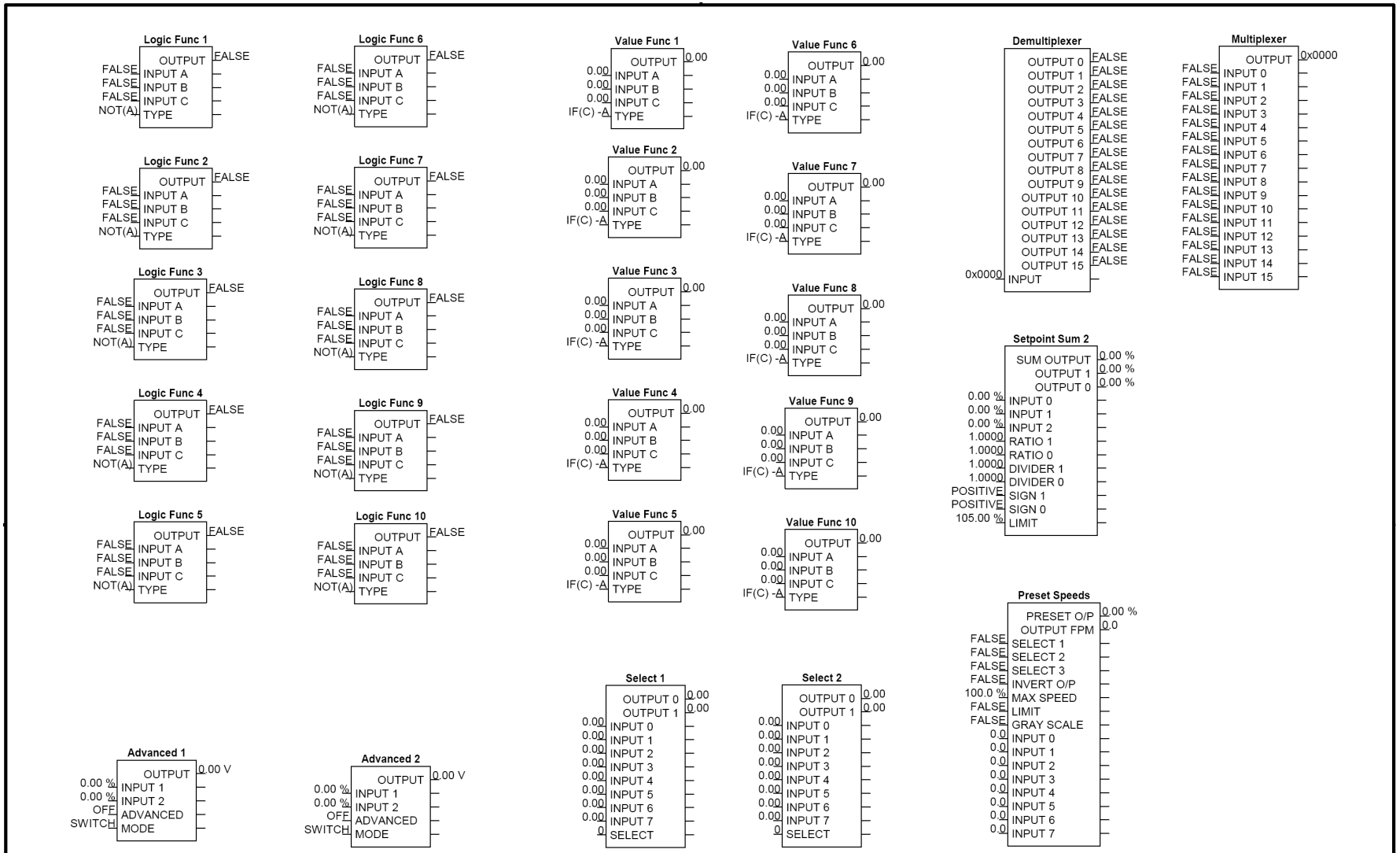

Configuration for version 8.x 590 Plus drive.

Programming Block Diagram - Sheet 4

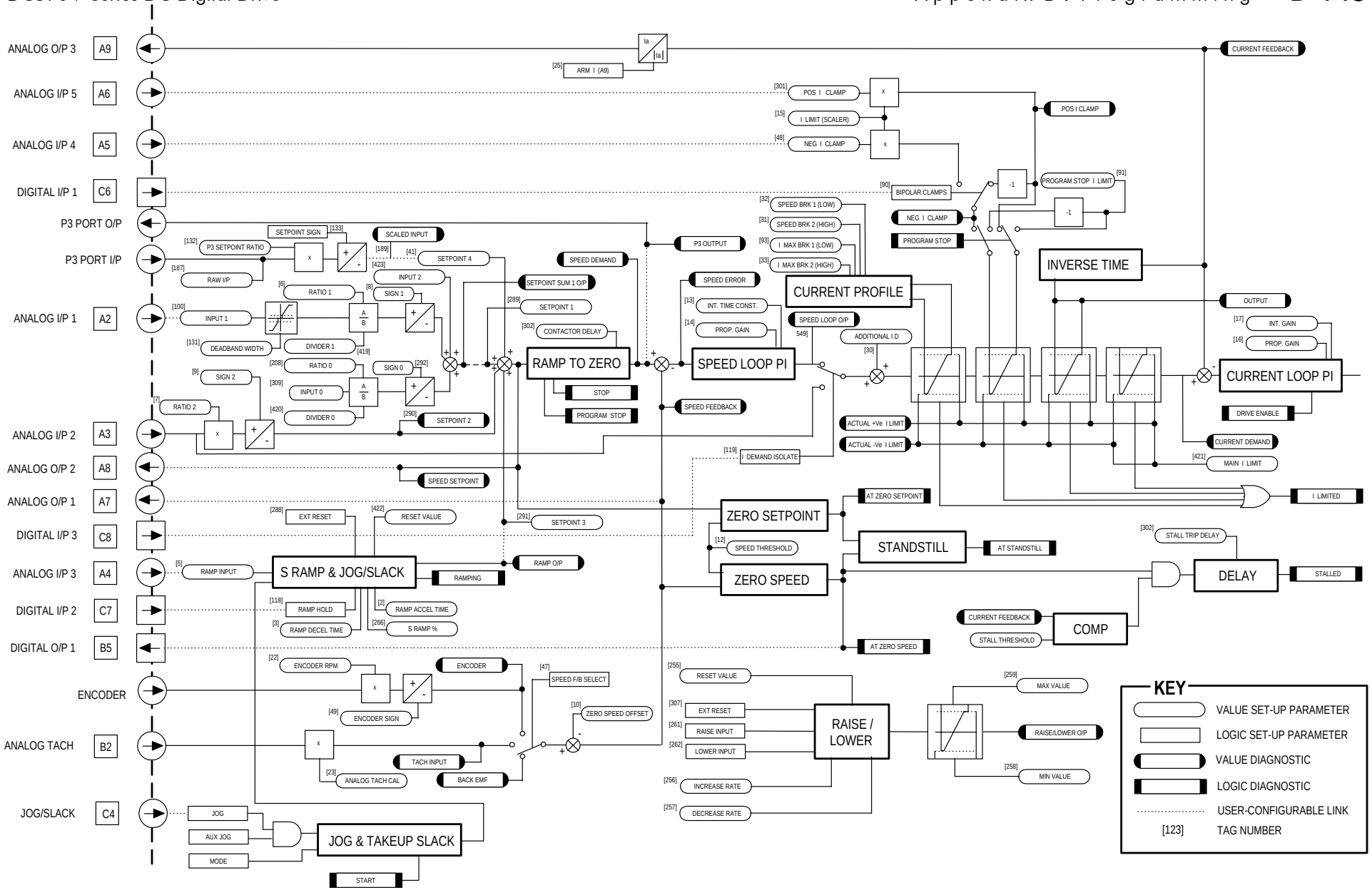

Main Block Diagram

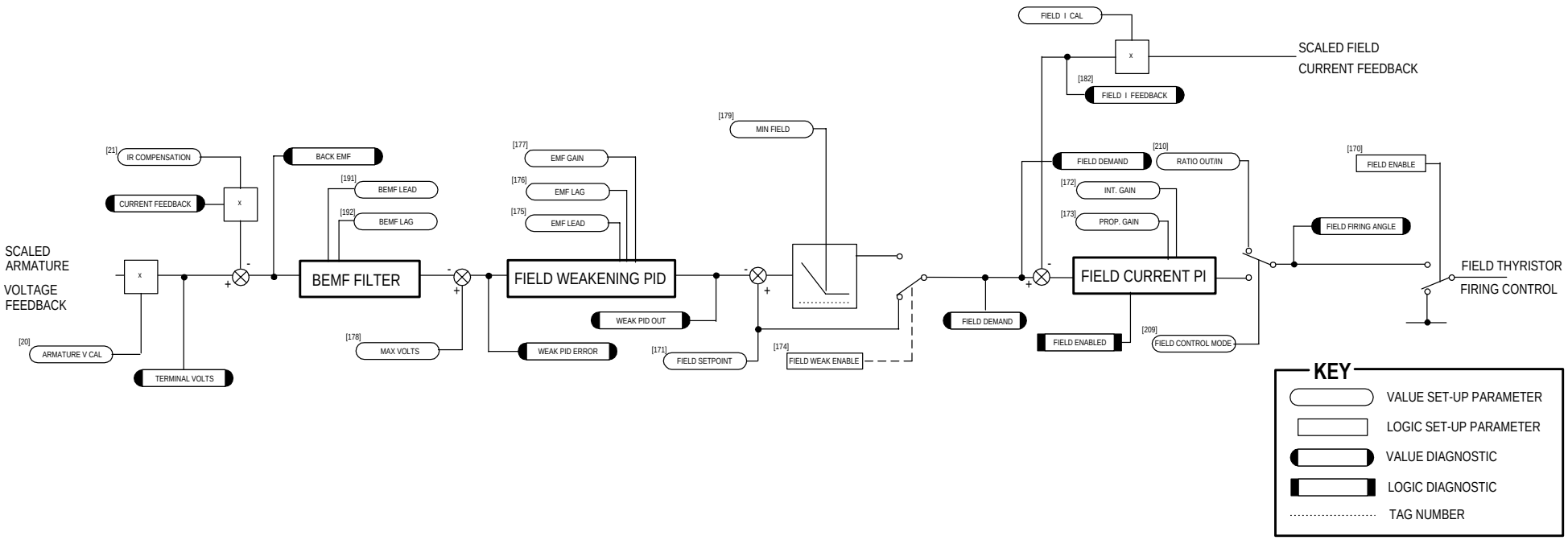

Field Control Block Diagram

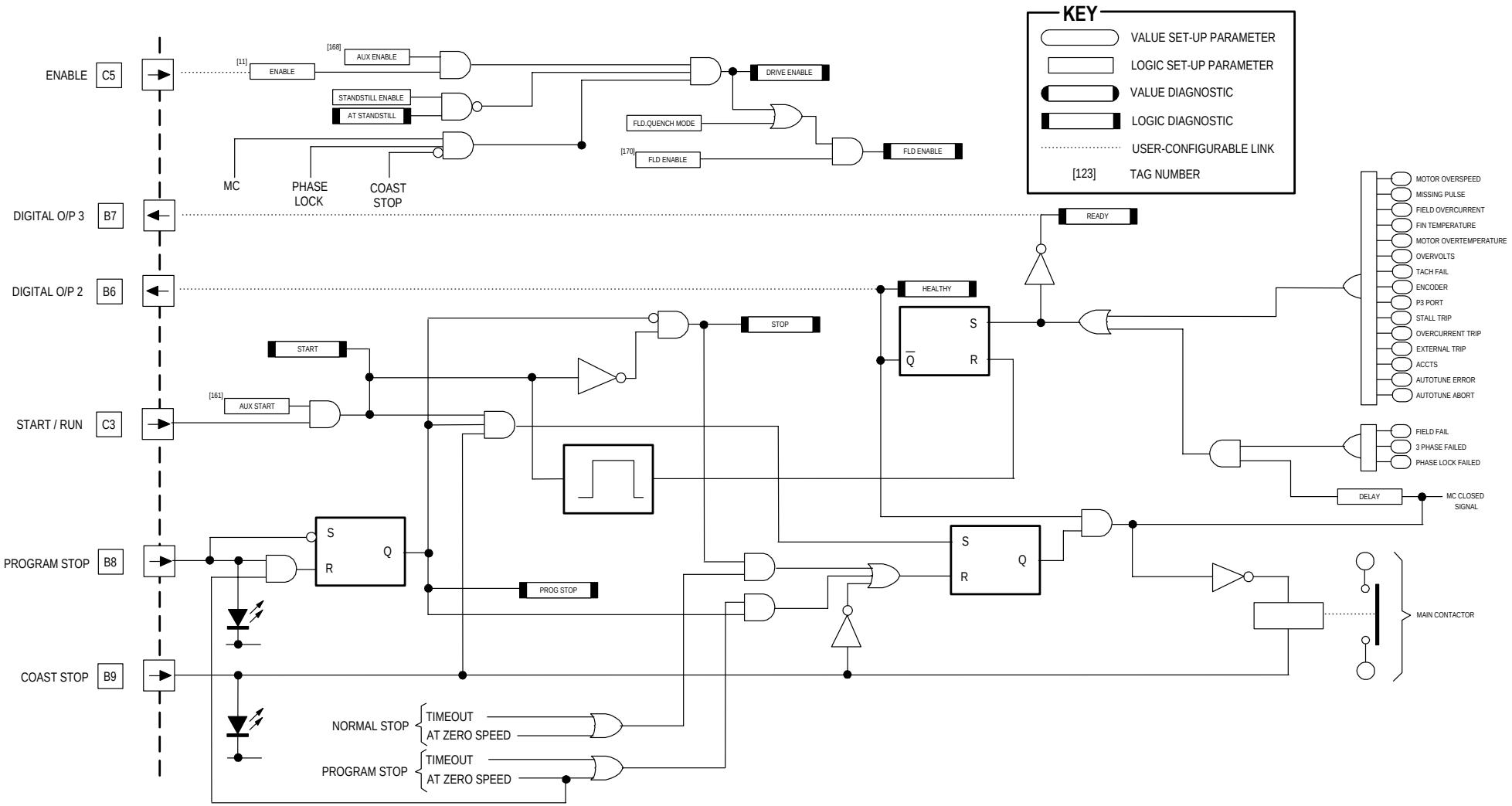

Start/Healthy Logic Block Diagram

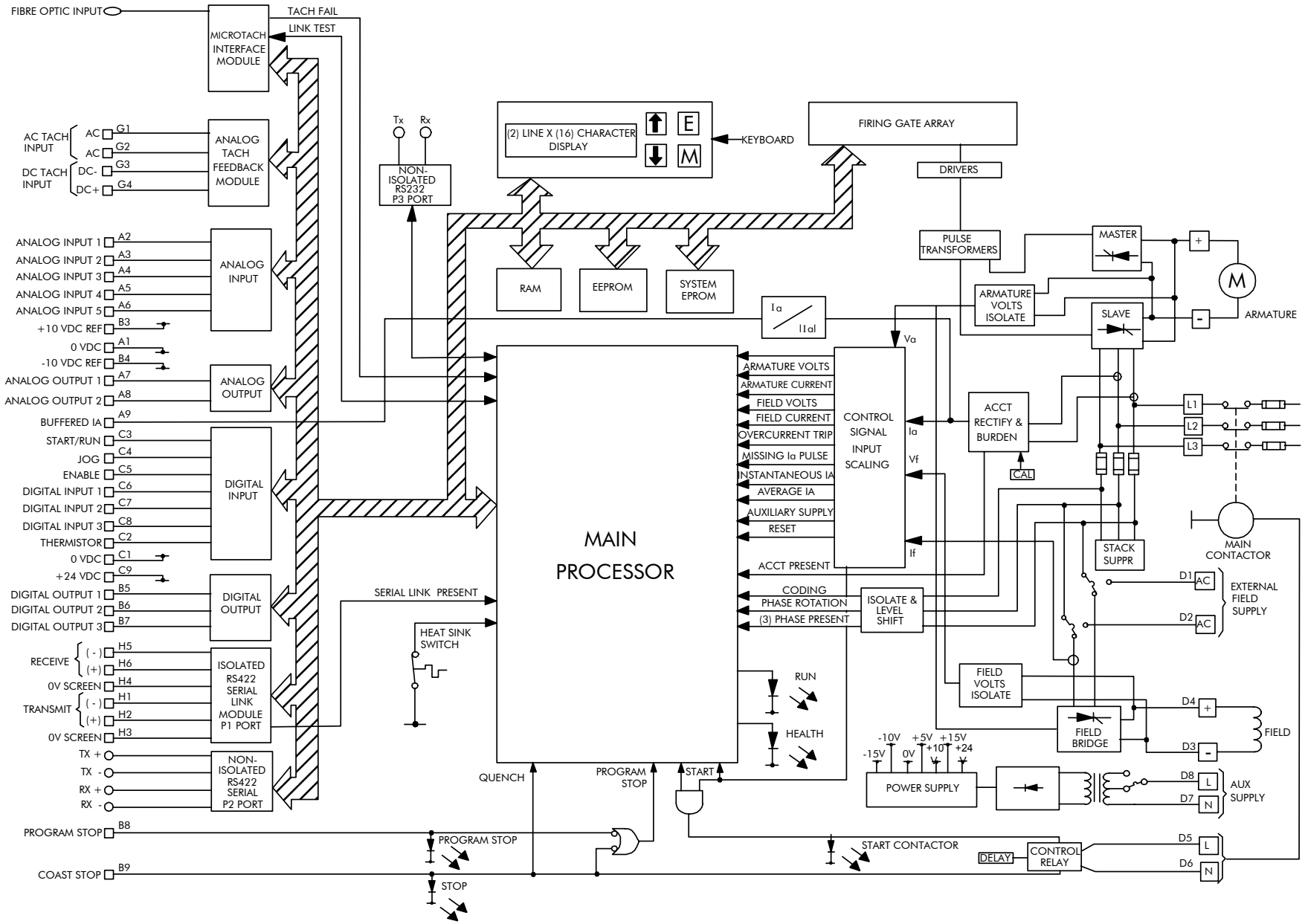

Functional Block Diagram

Appendix E

Technical Specifications

Understanding the Product Code E-1
Model Number E-1
Door Assembly Product Code E-4
Technical Specifications E-5
Environmental Details E-5
Electrical Ratings - Power Circuit E-6
Electrical Ratings - Power Circuit E-7
EMC Compliance E-7
Power Supply Details E-8
Auxiliary Power Supply Details E-8
AC Line Choke (Frames 1-5) E-9
AC Line Choke (Frames 6 & H) E-11
External AC Supply (RFI) Filters E-12
External Power Semiconductor Protection Fuses (Frames 1-5) E-13
Internal Power Semiconductor Protection Fuses (Frames 6 & H) E-14
Earthing/Safety Details E-14
Power Supply Fuses E-15
Field Fuses E-15
Terminal Definitions (Digital/Analog Inputs & Outputs) E-16
Terminal Information - Power Board (Frames 1-5) E-17
Terminal Information – Control Board E-21
Terminal Information (Frames 6 & H) E-26
Terminal Information – Option Boards E-27
Wiring Requirements for EMC Compliance E-28
Wire Sizes and Termination Tightening Torques (Frames 1-5) E-29
Termination Tightening Torque (Frame 6) E-31
Termination Tightening Torque (Frame H) E-31
Cooling Fans E-32
Spares List (Frames 1-5 & H) E-33
Spares List (Frame 6) E-39

Understanding the Product Code

Model Number

The unit is fully identified using an alphanumeric code which records how the Drive was calibrated, its various settings when despatched from the factory, and the country of origin.

The Product Code appears as the “Model No”. Each block of the Product Code is identified as below.

590+ Series Product Code

	Block 1		Block 2					Block 3			Block 4			
Example ►	590P	-	23	2150	1	0	-	P	00	-	U	0	A	0

Family	**590+ Series DC Digital Drive - regen**				**590P**
	591+ Series DC Digital Drive - non-regen				**591P**
	Supply Voltage	Output Current (A)	Frame Size		
Current/Power Ratings	110-220V 3ph			**23**	
		15	1	**2150**	**1**
		35	1	**2350**	**1**
		40	2	**2400**	**2**
		70	2	**2700**	**2**
		110	2	**3110**	**2**
		165	2	**3165**	**2**
		180	3	**3180**	**3**
		270	3	**3270**	**3**
		380	4	**3380**	**4**
		500	4	**3500**	**4**
		725	4	**3725**	**4**
		830	4	**3830**	**4**
		1580	5	**4158**	**5**
	220-500V 3ph			**53**	
		15	1	**2150**	**1**
		35	1	**2350**	**1**
		40	2	**2400**	**2**
		70	2	**2700**	**2**
		110	2	**3110**	**2**
		165	2	**3165**	**2**
		180	3	**3180**	**3**
		270	3	**3270**	**3**
		380	4	**3380**	**4**
		500	4	**3500**	**4**
		725	4	**3725**	**4**
		830	4	**3830**	**4**
		1580	5	**4158**	**5**
		1250	6	**4125**	**6**
		1600	6	**4160**	**6**
		1950	6	**4195**	**6**
		1200	H	**4120**	**H**
		1700	H	**4170**	**H**
		2200	H	**4220**	**H**
		2700	H	**4270**	**H**
	500-600V 3ph			**63**	
		380	4	**3380**	**4**
		500	4	**3500**	**4**
		725	4	**3725**	**4**
		830	4	**3830**	**4**
		1580	5	**4158**	**5**
	500-690V 3ph			**73**	
		1250	6	**4125**	**6**
		1600	6	**4160**	**6**
		1950	6	**4195**	**6**
		1200	H	**4120**	**H**
		1700	H	**4170**	**H**
		2200	H	**4220**	**H**
		2700	H	**4270**	**H**
Auxiliary Supply	Universal 115V-230V 1ph (Frames 1, 2, 6 & H)				**0**
	115V 1ph (Frames 3 - 5)				**1**
	230V 1ph (Frames 3 - 5)				**2**
Mechanical Style	Panel Mounting				**P**
	Panel Mounting + Airflow Kit (option on Frames 4 & 5 only)				**A**
Special Option	None				**00**
	Documented special options (01-99)				
Destination	English (50/60Hz)				**U**
	German				**D**
	Spanish				**E**
	French				**F**
	Italian				**I**
Keypad	None				**0**
	6901 keypad fitted				**4**
Speed Feedback	Analog Tacho				**A**
	Glass Fiberoptic encoder				**G**
	Plastic Fiberoptic encoder				**P**
	Armature Voltage				**V**
	Wire-ended Encoder				**W**
Comms	None				**0**
	ControlNet				**C**
	DeviceNet				**D**
	Ethernet				**E**
	Link				**L**
	ModBus +				**M**
	CanOpen				**N**
	Profibus				**P**
	RS485/RS422				**R**

HA500530C000_03

590+ Frame 6 Phase Assembly Product Code

				Block 1	Block 2	Block 3
			Example ►	590PL	- 53 4125 6 0	- P 00
Family	**590+ Series DC Digital Drive - regen Phase Limb**			**590PL**		
	591+ Series DC Digital Drive - non-regen Phase Limb			**591PL**		
	Supply Voltage	Output Current (A)	Frame Size			
Current/Power Ratings	220-500V 3ph				**53**	
		1250	6		**4125 6**	
		1600	6		**4160 6**	
		1950	6		**4195 6**	
	500-690V 3ph				**73**	
		1250	6		**4125 6**	
		1600	6		**4160 6**	
		1950	6		**4195 6**	
Auxiliary Supply	None					**0**
Mechanical Style	Panel Mounting					**P**
Special Option	None					**00**
	Documented special options (01-99)					

HA500530C000_03

590+ Series Frame 6 Control Panel Assembly Product Code

				Block 1	Block 2	Block 3	Block4
			Example ►	590PG	- 53 0000 6 0	- P 00	- U 4
Family	**590+ Series DC Digital Drive - Frame 6 Gantry**			**590PG**			
	Supply Voltage	Frame Size					
Current/Power Ratings	220-500V 3ph				**53**		
		6			**0000 6**		
	500-690V 3ph				**73**		
		6			**0000 6**		
Auxiliary Supply	Universal 115V-230V 1ph				**0**		
Mechanical Style	Panel Mounting					**P**	
Special Option	None					**00**	
	Documented special options (01-99)						
Destination	English (50/60Hz)						**U**
	German						**D**
	Spanish						**E**
	French						**F**
	Italian						**I**
Keypad	6901 keypad fitted						**4**

HA500530C000_03

Door Assembly Product Code

The door assembly is identified separately. The Product Code appears on a label displayed under the terminal cover.

Block No.	Variable	Description
1	XXXXX	Generic product 590PD : Fits Frame 4 and 5 units 590PXD : Fits Frame 3, 6 & H units
2	XXXX	4 digits describing the mechanical package including livery and mechanical package style: *First two digits (on the left)* *Livery* 00 Standard Parker SSD Drives Livery 05 Distributor Livery 01-04 and 06-99 Defined customer liveries TBA *Third digit* *Mechanical Package Style* 1 Standard *Fourth digit* *Keypad* 0 No keypad 1 Built-in keypad
3	XX	Two characters specifying the user interface language: UK = English FR = French GR = German (refer to Customer Services) SP = Spanish (refer to Customer Services) IT = Italian (refer to Customer Services)
4	XXX	Up to three characters specifying engineering special options: 0 = No special option

Technical Specifications

Environmental Details			
Operating Temperature	Frame 1 : 0°C to +45°C Frame 2 : 0°C to +45°C Frame 3 : 0°C to +35°C	Frame 4 : 0°C to +40°C Frame 5 : 0°C to +40°C Frame 6 : 0°C to +40°C	Frame H : 0°C to +40°C
	Operating temperature is defined as the ambient temperature to the immediate surround of the Drive, when the Drive and other equipment adjacent to it is operating at worst case conditions. Output current values should be derated at 1% per degree Centigrade above rated temperature up to a maximum of 55°C.		
Storage Temperature	-25°C to +55°C		
Shipping Temperature	-25°C to +70 °C		
Product Enclosure Rating	IP00 (Europe) [Frame 1 unit is IP20] UL Open Type (North America/Canada) If the product enclosure is totally enclosed, the exposed metal surface dissipates approximately 50W/m² for a 10°C temperature rise of internal air above ambient.		
Vibration	Test Fc of EN60068-2-6 10Hz<=f<=57Hz sinusoidal 0.075mm amplitude 57Hz<=f<=150Hz sinusoidal 1g 10 sweep cycles per axis on each of three mutually perpendicular axis		
Altitude	If >500 metres (1650 feet) above sea level, derate Motor Power rating by 1% per 200 metres (660 feet) to a maximum of 5,000 metres (16,500 feet)		
Humidity	Maximum 85% relative humidity at 40°C non-condensing		
Atmosphere	Non flammable, non corrosive and dust free		
Climatic Conditions	Class 3k3, as defined by EN60721-3-3 (1995)		
Safety			
Europe	EN61800-5 : 2003, when fitted inside a cubicle		
North America/Canada	UL508C		
Overvoltage Category	Overvoltage Category III (3-phase supply), Overvoltage Category II (auxiliary supply)		
Pollution Degree	Pollution Degree 2		

Electrical Ratings - Power Circuit

Refer to Chapter 3: "Earth Fault Monitoring Systems" for circuit breaker details.
Motor HP ratings as NEC Table 430-147: "Full Load Current in Amperes, DC Motors"'

Output Current @ 150% and 200% * (A)	Output Current @ 100% Continuous * (A)	Power @ 500V dc (kW)	Motor HP @ 500V dc (HP)	Field Current (A)	Total Losses @ Full Load (W)	Symmetrical Fault Current rms (kA)
Frame 1						
15	15	7	7.5	4	57	5
35	35	15	20	4	117	5
Frame 2						
40	40	18	25	10	132	10
70	70	30	40	10	234	10
110	110	50	60	10	354	10
165	165	75	100	10	519	10
Frame 3						
180	180	80	50 ♦	10	570	10
270	270	120	150	10	840	10
Frame 4						
380	420	150	200 ★	30	1230	18
500	550	225	300 ★	30	1590	18
725	800	327	400 ★	30	2265	30
830	910	335	500 ★	30	2580	30
Frame 5						
1580	1740	650	900 ★	30	4890	85
Frame 6						
1250	1350	600	800	60	4600	100
1600	1750	750	1000	60	5000	100
1950 #	2150	900	1200	60	6000	100

Electrical Ratings - Power Circuit

Refer to Chapter 3: "Earth Fault Monitoring Systems" for circuit breaker details.
Motor HP ratings as NEC Table 430-147: "Full Load Current in Amperes, DC Motors"'

Output Current @ 150% and 200% * (A)	Output Current @ 100% Continuous * (A)	Power @ 500V dc (kW)	Motor HP @ 500V dc (HP)	Field Current (A)	Total Losses @ Full Load (W)	Symmetrical Fault Current rms (kA)
Frame H						
1050	1200	550	700 †	60	3780	100
1450	1700	750	1000 †	60	5280	100
2000	2200	1000	1250 †	60	6780	100
2400	2700	1200	1500 †	60	8280	100

Output current values should be derated at 1% per degree Centigrade above rated temperature up to a maximum of 55°C.
Output current values should be derated at an altitude of 500 metres above sea level at a rate of 1% per 200 metres to a maximum of 5000 metres.

* The output current figures are given at 100% Continuous (no overload), and with overloads of 150% for 30 seconds or 200% for 10 seconds.

♦ Rated armature voltage : 240V dc

★ These products are suitable for supplies up to 600V ac and armature voltages of 700V dc, hence output power ratings can be increased by up to 140%

\# Derated to 1850/1950 on HV assemblies

† These products are suitable for supplies up to 690V ac and armature voltages of 750V dc, hence output power ratings can be increased by up to 150%

EMC Compliance

All models	European Community Directive 2004/108/EC
All models	EN61800-3 (2004) Table 17 : conducted emissions when installed in accordance with the instructions in Chapter 3. Refer to "Mounting the Drive". EN61800-3 (2004) Immunity requirements: Maximum controlled speed (with feedback option) deviation = ±1% Maximum controlled armature current deviation = ±1% Maximum controlled field current deviation = ±10% Maximum line impedance 3% for compliance (defined as percentage drop in line-to-neutral voltage when rated dc current flows in armature output) EN61800-3 (2004) Table 18 Radiated emissions
If fitted with specified external filters (except Frames 6 & H)	EN61800-3 (2004) restricted distribution: conducted emissions

Power Supply Details

3-Phase Supply	LV Build	All Frames	110-220V ac ±10%, 50/60Hz ± 5%, line-to-line, ground referenced (TN) and non-ground referenced (IT)
	MV Build(standard)	All Frames	220-500V ac ±10%, 50/60Hz ± 5%, line-to-line, ground referenced (TN) and non-ground referenced (IT)
	HV Build	Frame 4 Frame 5	500-600V ac ±10%, 50/60Hz ± 5%, line-to-line, ground referenced (TN) and non-ground referenced (IT)
		Frame 6 & H	500-690V ac ±10%, 50/60Hz ± 5%, line-to-line, ground referenced (TN) and non-ground referenced (IT)
Supply Current		(0.9 x Idc) Amps ac rms	
Field Supply Current		(1 x Idc) Amps ac rms (build related)	
Field Supply Voltage		Build-related	
3 Phase Input		3-phase rotation insensitive, no adjustment necessary for frequency change	

Auxiliary Power Supply Details

Auxiliary Supply	110-230V ±10%, 50-60Hz ±10%, single phase, Overvoltage Category II Where auxiliary cooling fans are used, then the supply is set by the requirement for the fan, i.e. 115V ±10% or 230V ±10%. Refer to Model Number, page E-1.
Auxiliary Supply Current	3A ac rms maximum. Nominal current used for power supplies: 0.5A at 115V ac, 0.25A at 230V ac Fan current for integral fans: refer to Cooling Fans, page E-32. The remainder is available for driving the AC Contactor Frame 6: Total of 3A ac maximum, 250W.
Contactor Output	3A maximum at the auxiliary voltage

AC Line Choke (Frames 1-5)

To correctly isolate the DC590+ drive from the ac power system, and to protect other equipment from transients on the power system, always use the recommended external ac line choke (or alternatively a transformer may achieve the necessary isolation).

Note that the Frame 5 requires two ac line chokes (one in front of each of the paralleled drives). This provides isolating impedance between the drive and its ac power source. It also provides the necessary impedance between the paralleled drives, forcing them to share the total motor current evenly. The Frame 5 drive must still use two ac line chokes when a transformer is used for isolation, however, the chokes can be of a much lower inductance, typically 3-5 µH.

Drives below 100A Armature Current rating cannot achieve confromance with EN61800-3 Table 17 using only a 50µH line choke. Capacitors must be fitted between phase and earth to achieve conformance. Refer to Chapter 3: "Installing the Drive" - Filtering.

Armature Current Rating (A)	AC Rating (A)	Inductance (µH)		Parker SSD Drives Part No.	
		500Vac	600Vac	500Vac	600Vac
For use without filters (use with capacitors for armature currents <100A, refer to Chapter 3: "AC Line Choke")					
Frame 1					
15	13.5	50 µH	-	CO466448U015	-
35	36	50 µH	-	CO466448U040	-
Frame 2					
40	36	50 µH	-	CO466448U040	-
70	63	50 µH	-	CO466448U070	-
110	100	50 µH	-	CO466448U110	-
165	148.5	50 µH	-	CO466448U165	-
Frame 3					
180	162	50 µH	-	CO055255	-
270	243	50 µH	-	CO057960	-
AC Line Chokes @ 2% line impedance for conformance with EN61800-3 (2004) Table 14 Category C2 when used with specified filters.					
Frame 1					
15	13.5	1130 µH	-	CO466449U015	-
35	36	424 µH	-	CO466449U040	-
Frame 2					
40	36	424 µH	-	CO466449U040	-
70	63	242 µH	-	CO466449U070	-
110	100	154 µH	-	CO466449U110	-
165	148.5	113 µH	-	CO466449U165	-
Frame 3					
180	162	113 µH	-	CO463039	-
270	243	50 µH	-	CO057960	-

AC Line Choke (Frames 1-5)

To correctly isolate the DC590+ drive from the ac power system, and to protect other equipment from transients on the power system, always use the recommended external ac line choke (or alternatively a transformer may achieve the necessary isolation).

Note that the Frame 5 requires two ac line chokes (one in front of each of the paralleled drives). This provides isolating impedance between the drive and its ac power source. It also provides the necessary impedance between the paralleled drives, forcing them to share the total motor current evenly. The Frame 5 drive must still use two ac line chokes when a transformer is used for isolation, however, the chokes can be of a much lower inductance, typically 3-5 µH.

Drives below 100A Armature Current rating cannot achieve confromance with EN61800-3 Table 17 using only a 50µH line choke. Capacitors must be fitted between phase and earth to achieve conformance. Refer to Chapter 3: "Installing the Drive" - Filtering.

Armature Current Rating (A)	AC Rating (A)	Inductance (µH)		Parker SSD Drives Part No.	
		500Vac	600Vac	500Vac	600Vac
AC Line Chokes @ 1% line impedance for conformance with EN61800-3 (2004) Table 14 Category C2 when used with specified filters.					
Frame 4					
380	342	-	30 µH	-	CO466709U038
500	450	-	25 µH	-	CO466709U050
725	653	-	20 µH	-	CO466709U073
830	747	-	15 µH	-	CO466709U083
Frame 5 (2 chokes required)					
0831-1200	747	-	20 µH	-	CO466709U073
0831-1200 (use with transformer only)	747	-	5 µH	-	CO466709U120
1201-1580	747	-	15 µH	-	CO466709U083
1201-1580 (use with transformer only)	747	-	5 µH	-	CO466709U160

AC Line Choke (Frames 6 & H)

Always use the recommended external AC Line Choke.

DC Rating		AC Current	Inductance	Parker SSD Drives Part No.
AC Line Choke @ 2% line impedance.				
Frame 6				
1250	500V	1080A	15µH	CO466250U012
	690V	1080A	20µH	CO466251U012
1600	500V	1620A	10µH	CO466250U017
	690V	1620A	15µH	CO466251U017
1950	500V	1980A	10µH	CO466250U022
	690V	1980A	15µH	CO466251U022
Frame H				
1200	LV	1080A	15µH	CO466250U012
	HV	1080A	20µH	CO466251U012
1700	LV	1620A	10µH	CO466250U017
	HV	1620A	15µH	CO466251U017
2200	LV	1980A	10µH	CO466250U022
	HV	1980A	15µH	CO466251U022
2700	LV	2520A	7.5µH	CO466250U027
	HV	2520A	10µH	CO466251U027

External AC Supply (RFI) Filters

Filters must only be fitted on the mains side of the contactor.

AC supply filter part numbers for conformance with EN61800-3 (2004) Table 14 Category C2.

Armature Current Rating (A)	Total Filter Watt Loss (W)	Parker SSD Drives Filter Part No.
Frame 1		
15	11	1 off CO467844U015
35	16	1 off CO467844U040
Frame 2		
40	16	1 off CO467844U040
70	16	1 off CO467844U070
110	18	1 off CO467844U110
165	25	1 off CO467844U165
Frame 3		
180	158	1 off CO467844U180
270	50	1 off CO467843U340
Frame 4		
380	100	2 off CO467843U340
500	100	2 off CO467843U340
725	150	3 off CO467843U340
830	150	3 off CO467843U340
Frame 5		
1580 (please contact Parker SSD Drives)		
Frame 6		
1350-2150 (please contact Parker SSD Drives)		
Frame H		
1200-2700 (please contact Parker SSD Drives)		

External Power Semiconductor Protection Fuses (Frames 1-5)

For fuses where compliance to UL Standards are required, refer to Appendix B: "Certification" – Branch Circuit/Short Circuit Protection Requirements.

Controller Rating (A)	Line Fuse Rating (A)	Parker SSD Drives Part No.	Fuse I^2t @ 600V (kA^2s)	Thyristor I^2t (kA^2s)
Frame 1				
15	25	CS470445U025	0.31	0.72
35	40	CH570044	0.46	0.72
Frame 2				
40	40	CH570044	0.46	1.15
70	80	CH570084	2.55	8
110	160	CH580164	7.5	15
165	200	CH580025	15	19.1
Frame 3				
180	200	CH580025	15	19.1
270	500	CH590554	135 (*102)	125
Frame 4				
380	550	CH590554	135	240
500	700	CH590075	300	306
725	900	CH590095	670	781
830	1000	CH590016	945	1125
Frame 5				
1580	2 x 1000	CH590016	945	1125

* A correction factor of 0.75 is applied to 135 @ 600V for 500V operation, hence 102

Internal Power Semiconductor Protection Fuses (Frames 6 & H)

For fuses where compliance to UL Standards are required, refer to Appendix B: "Certification" – Branch Circuit/Short Circuit Protection Requirements.

Controller Rating (A)	Line Fuse Rating (A)	Parker SSD Drives Part No.	Limb Fuse Rating	Parker SSD Drives Part No.
Frame 6				
1250	1000	CS466260U100	700	CS466261U070
1600	1400	CS466260U140	1000	CS466261U100
1950	1800	CS466260U180	1250	CS466261U125
Frame H				
1200	500 x 2	CS466260U050	350 x 2	CS466261U035
1700	800 x 2	CS466260U080	550 x 2	CS466261U055
2200	1000 x 2	CS466260U100	700 x 2	CS466261U070
2700	1250 x 2	CS466260U125	900 x 2	CS466261U090
* Ferrule fuse 14 x 51mm, for use in ST14 Fuse Holder (CP054175)				

We recommend that all DC590+ drives are protected by semiconductor fuses.

Frame 6 and Frame H units are fitted with internal fuses:

- the 4Q (590+) units have limb fuses
- the 2Q (591+) units have line fuses

Earthing/Safety Details

Protective Earth	Permanent earthing is mandatory on all units because the earth leakage current exceeds 3.5mA ac/10mA dc under normal operating conditions. Permanent earthing can be made in two ways: 1. By using a copper conductor of at least 10mm² cross-sectional area. 2. By using a second conductor, through separate terminals electrically parallel to the protective conductor. **Note: Each conductor itself must meet the local requirements for a protective earth conductor.**
Input Supply Details (TN) and (IT)	Units with or without external filters are suitable for use on earth referenced (TN) supplies, but units used with a filter are not recommended for non-earth referenced (IT) supplies..
Earth Leakage Current	>50mA (all models)

Power Supply Fuses

Power Board	Identification	Fuse Rating	Parker SSD Drives Part No.
Frame 1			
AH466407 (terminal board)	FS1, 5x20mm glass slow-blow (for auxiliary supply, contactor, fan supply)	3A	CH540033
Frame 2			
AH470330	FS1, 5x20mm glass slow-blow (for auxiliary supply, contactor, fan supply)	3A	CH540033
Frame 3			
AH385851	FS1, 5x20mm glass slow-blow (for auxiliary supply, contactor, fan supply)	3A	CH540033
Frame 4 & 5			
AH466701	FS3 and FS4, 5x20mm glass slow-blow (for auxiliary supply, contactor, fan supply)	3A	CH540033
Frame 6			
AH469419Uxxx	FS1 & FS2, 5x20mm glass slow-blow (FS1: for auxiliary supply, contactor) (FS2: for fan SMPS)	3A	CH540033
Frame H			
AH466001	FS1, 5x20mm glass slow-blow (for auxiliary supply, contactor)	3A	CH540033

Field Fuses

Identification	Fuse Rating	Parker SSD Drives Part No.
Frames 1, 2 & 3		
10x38mm	10A	CS470407U010
Frame 4 & 5		
10x38mm	30A	CS470407U030
Frame 6		
Bussman Zilox 170M 1566	80A	CH570084
External field fuses are required for Frame H units.		

Terminal Definitions (Digital/Analog Inputs & Outputs)

User inputs are IEC1131 compliant. Terminal blocks A, B, and C are located on the control board each block being a 9 way plug-in connector. In addition to terminal blocks A, B and C, terminal blocks G and H provide connections when the two option modules are fitted on the control board.

Digital Input	Rated Voltage: • Off Region • Transition Region • On Region Input Impedance Sample Interval Debounce Period Encoder Mode (Digital Input 1 & 2): • SPACE Region • Transition Region • MARK Region Maximum Clock Frequency	24V dc -3V to +5V, min.current not defined, max. 15mA +5V to +15V, min.0.5mA, max. 15mA +15V to +30V, min. 2mA, max. 15mA Nominally 3.3kΩ 5ms 3ms 5V logic -3V to +0.5V +0.5V to +3V +3V to +30V 100kHz
Digital Output These outputs are active high and source current from the terminal to the load. Thus the load must be connected between the output and the signal ground. A free-wheel diode is included in the output to protect the output transistor when switching inductive loads such as relays.	Digital Output Voltage Output Update Interval Output Impedance Source/Sink Rated Current Temporary Overload Overload Protection Overload Recover Reverse Voltage Protection Operating Voltage Off state leakage current	Nominally +24V dc 5ms Negligible up to 50mA load Source +100mA maximum source None Indefinite short circuit protection provided Automatic Protected against current-limited reverse voltage sources (<100mA) <30V dc <0.4mA sourcing
Analog Input	Input Resolution Input Impedance Input Impedance Limit Sample Interval Hardware Latency Overload Capability	12 Bit plus sign, i.e. 2.5mV resolution, equals 0.025% of full scale deflection 112kΩ ≥10kΩ (signal range -10V to +10V) 5ms, and just-in-time for control loops on Analog I/P 2 (A3), min. 5ms 1.3ms filter for Analog I/P (A3) and 2.5ms for others. +10%, i.e. maximum recognisable voltage +/-11V. Analog Tachogenerator input should be applied to Terminal G3 on Calibration Option Card only.
Analog Output	Output Resolution Output Drive Capacity Update Interval Settling Time Output Overdrive Capability Overload Protection	11 Bit plus sign, i.e. 5mV resolution, equals 0.05% of full scale deflection 10V at 5mA max. 5ms 5ms, for 0% to 90% +10%, i.e. maximum output +/-11V at 2.5mA max. Indefinite short circuit protection provided

Terminal Information - Power Board (Frames 1-5)

Note that on Frame 1 and 2 units, L1, L2, L3, A+ and A- terminals are located on a separate Terminal Board. On Frame 3, 4 & 5 units, they are busbar connections.

Frame 3 units have terminal designations D1 to D8, shown in brackets in the Terminal Number column of this table.

Terminal Description	Terminal Function	Signal Level	Terminal Number
Mains Supply L1	Three phase mains power input, phase reference Line 1	Refer to Power Supply Details, page E-8.	L1
Mains Supply L2	Three phase mains power input, phase reference Line 2	Refer to Power Supply Details, page E-8.	L2
Mains Supply L3	Three phase mains power input, phase reference Line 3	Refer to Power Supply Details, page E-8.	L3
Armature connection positive A+	Drive dc power output, reference Armature Positive connection to dc motor	Maximum voltage dependent upon the supply voltage, the ratio being: Vout is approximately equal to 1.15Vac supply	A+
Armature connection negative A-	Drive dc power output, reference Armature Negative connection to dc motor	Maximum voltage dependent upon the supply voltage, the ratio being: Vout is approximately equal to 1.15Vac supply	A-
Auxiliary N/C Volt-Free MC Contact : 1, 2	Used to indicate the status of the main contactor (L1, L2, L3). See TB4.	-	1, 2
External field supply FL1	External single phase ac Line 1 input to field bridge.	500V ac maximum, 50-60Hz line-to-line	FL1 (D1)

Terminal Information - Power Board (Frames 1-5)

Note that on Frame 1 and 2 units, L1, L2, L3, A+ and A- terminals are located on a separate Terminal Board. On Frame 3, 4 & 5 units, they are busbar connections.

Frame 3 units have terminal designations D1 to D8, shown in brackets in the Terminal Number column of this table.

Terminal Description	Terminal Function	Signal Level	Terminal Number
External field supply FL2 **This feature not available on Frame 1 units**	External single phase ac Line 2 input to field bridge. Required AC Input Voltage = 1.11 x Nominal DC Output. The field regulator will control the field current provided that the Nominal DC Output voltage exceeds the field voltage by at least 10%. i.e. $V_{AC} = 1.11 \times V_{DC}$ and $V_{DC} = 1.1 \times V_{FIELD}$ therefore $V_{AC} = 1.22 \times V_{FIELD}$ The external AC supply must be fitted with high speed fuses to protect the field regulator. For controllers with 10A field capability 10A fuses should be used. *Note: When using an external ac input it is important to have the correct phase relationship on the terminals. The supply must be derived from L1 (Red) and L2 (Yellow) phases directly or indirectly through a transformer. L1 must be connected to FL1, and L2 to FL2.*	500V ac maximum, 50-60Hz line-to-line	FL2 (D2)
Field Output F-	DC supply for motor field connections. The DC output voltage at these terminals will depend upon the AC supply voltage and the mode of field control. ***Voltage Control*** The output voltage will be determined by the ratio parameter in the field variables. The relationship between the dc output voltage and AC input voltage is determined by the equation:- $Vdc = \frac{Vratio \times VAC}{100}$ The default value of Vratio is 90% hence the DC output voltage will be the same as for a full wave diode rectifier i.e., 90% is maximum output.	0.9 x Vac	F– (D3)
Field Output F+	DC supply for motor field connections.	0.9 x Vac	F+ (D4)

Terminal Information - Power Board (Frames 1-5)

Note that on Frame 1 and 2 units, L1, L2, L3, A+ and A- terminals are located on a separate Terminal Board. On Frame 3, 4 & 5 units, they are busbar connections.

Frame 3 units have terminal designations D1 to D8, shown in brackets in the Terminal Number column of this table.

Terminal Description	Terminal Function	Signal Level	Terminal Number
Auxiliary supply Aux N	Neutral	110-230V 50-60Hz line-to-line	CONTROL N (D7)
Auxiliary supply Aux L	Line These terminals are the mains input connections for the switch mode power supply and contactor control relay supply. Refer to the Product Code (Block 8) for the specified auxiliary voltage. Refer to Cooling Fans, page E-32 when using separate ac fans, (Frame H units).	110-230V 50-60Hz line-to-line	L (D8)
Main contactor coil Con L	Line This terminal is the switched output from the contactor control relay and is derived from the auxiliary supply at terminal D8. The output is internally fused at 3A hence contactor coils having a high pick-up current must be operated via a slave relay. *Note: When using a Slave Relay, the contacts of the Contactor Control Relay are internally suppressed by a series connected resistor (680 Ohms) and capacitor (33µF) to protect the relay contacts. Users should be aware that when the Contactor Control Relay is "De-energised", a leakage current of approximately 2mA @ 220V can be expected and this should be considered when interfacing to these terminals. Typically, there could be the energisation of very sensitive relays.*	Auxiliary Supply Voltage	EXT CONTACTOR 3 (D5)
Main contactor coil Con N	Neutral This terminal is internally connected to the auxiliary supply neutral and provides a convenient connection point for the contactor coil neutral connection.	Auxiliary Supply Voltage	4 (D6)

Terminal Information - Power Board (Frames 1-5)

Note that on Frame 1 and 2 units, L1, L2, L3, A+ and A- terminals are located on a separate Terminal Board. On Frame 3, 4 & 5 units, they are busbar connections.

Frame 3 units have terminal designations D1 to D8, shown in brackets in the Terminal Number column of this table.

Terminal Description	Terminal Function	Signal Level	Terminal Number
Thermistor Therm +	Isolated Thermistor Input - positive It is good practice to protect DC motors against sustained thermal overloads by fitting temperature sensitive resistors or switches in the field and interpole windings of the machine. The controller complies with the requirements of IEC 34-11-2-2 and is suitable for use with Mark A detectors. These devices have a low resistance (typically 200Ω) up to a reference temperature 125°C). Above this temperature, their resistance rises rapidly to greater than 4kΩ. The preferred installation is for three detectors to be connected in series between terminals Th1 and Th2. The 590+ will indicate a motor overtemperature alarm if the external resistance between Th1 and Th2 exceeds 3kΩ. The alarm can be reset when the resistance falls below 750Ω. Terminals Th1 and Th2 must be jumpered if overtemperature sensors are not used.	See description	MOTOR THERMISTOR Th1 (THERM+) (THERM+ & THERM –, found on Frame 3 units, are located on a separate pcb to the left of the power board in the door assembly)
Thermistor Therm -	Isolated Thermistor Input - negative See description above	See description	Th2 (THERM-)
PE	Protective ground – incoming ground	-	STUDS
PE	Protective ground – motor ground	-	STUDS
PE	Protective ground	-	STUDS

Terminal Information – Control Board

This Control Board is common to all 590+ units.

Terminal Description	Terminal Function	Signal Level	Configurable	Terminal Number
		TERMINAL BLOCK A		
0V (Signal)	Zero Volt Reference	0V	N/A	A1
Analog Input 1	Speed Setpoint No. 1	+10V = Full speed setpoint forward -10V = Full speed setpoint reverse	YES	A2
Analog Input 2	Aux. Speed Setpoint/ Current Demand The function of this input is determined by Digital Input No. 3 at terminal C8. C8 open circuit = Speed Setpoint C8 at +24V = Current Demand	+10V = Full speed setpoint forward -10V = Full speed setpoint reverse in speed setpoint mode. +10V = 100% Positive current demand. -10V = 100% Reverse current demand.	NO	A3
Analog Input 3	Ramped Speed Setpoint	+10V = Full speed setpoint -10V = Full speed setpoint reverse	YES	A4
Analog Input 4	Aux. Current Clamp -ve	+10V = 200% Positive current demand -10V = 200% Reverse current clamp	YES	A5
Analog Input 5 Note that unused analog inputs should be connected to 0V (Signal), or disconnected from the block diagram, in order to reduce signal noise.	Main Current Limit/ Aux. Current Clamp +ve The function of analog inputs 4 and 5 is determined by digital Input No.1 on terminal C6. C6 open circuit: Analog inputs No.5 = Main Current Limit. C6 at +24V: Analog input No. 5 = Auxiliary Current Clamp Positive. Analog Input No. 4 = Auxiliary Current Clamp Negative.		YES	A6
Analog Output 1	Speed Feedback	+10V = Full speed feedback forward. -10V = Full speed feedback reverse.	YES	A7

Terminal Information – Control Board

This Control Board is common to all 590+ units.

Terminal Description	Terminal Function	Signal Level	Configurable	Terminal Number
Analog Output 2	Total Speed Setpoint	+10V = Full speed feedback forward. -10V = Full speed feedback reverse.	YES	A8
Current Meter Output	Buffered Armature Current Output The output can be selected as either Bipolar or Unipolar by the Armature I parameter.	Bipolar Mode +10V = 200% output current forward. -10V = 200% output current reverse. Unipolar Mode +10V = 200% output current.	NO	A9
TERMINAL BLOCK B				
0V (Signal)	Zero Volt Reference	0V	N/A	B1
Not Connected	Not Connected			B2
+10V DC Reference	User +10V Reference	+10V at 10mA short circuit protected	N/A	B3
-10V DC Reference	User -10V Reference	-10V at 10mA short circuit protected	YES	B4
Digital Output 1	Zero Speed Detected The operating level of this output can be modified by the standstill zero threshold parameter to give the desired accuracy of operation	+24V at zero speed (100mA maximum)	YES	B5
Digital Output 2	Drive Healthy (Drive Operational) This output is true when the controller is Healthy.	+24V when Healthy (100mA maximum)	YES	B6
Digital Output 3	Drive Ready This output is true when the controller is ready to function, i.e., "locked" into the mains.	+24V when Ready (100mA maximum)	YES	B7
Program Stop Input	Program Stop When the Program Stop input is held at +24V, the drive operates as required by the inputs. When the Program Stop is open circuit or at zero volts, the controller provides a controlled or program stop as defined by the Program Stop parameters.	+24V drive run 0V (o/c) drive program stop Threshold +16V	NO	B8

Terminal Information – Control Board

This Control Board is common to all 590+ units.

Terminal Description	Terminal Function	Signal Level	Configurable	Terminal Number
Coast Stop Input	Coast Stop When the Coast Stop input is at +24V, the controller operates normally. When the Coast Stop is at zero volts or open circuit, the main contactor is open and the drive no longer operates. The motor coasts to rest.	+24V drive run 0V (o/c) drive coasts to rest. Threshold +16V	NO	B9
TERMINAL BLOCK C				
0V (Signal)	Zero Volt Reference	0V	N/A	C1
External Trip Input	An external interlock or permissive.	External permissive element should be connected to C1 to run. If not using this feature, connect a jumper between C1 and C2. May be used as an unisolated motor thermal input	NO	C2
Start/Run Input	Start/Run When an input is applied to this terminal, the main contactor will close and the controller will operate provided there are no alarms, program stop/coast stop signals are high and the controller is enabled. When the input is removed the controller will perform a regenerative stop to zero speed. A regenerative stop can only be achieved by a 4 quad regenerative controller; the 2 quad non-regenerative controller will coast to zero speed.	+24V = True/Run 0V (o/c) = False/Normal Stop Threshold + 16V	NO	C3
Jog Input	Jog When the Jog Input is held at +24V, the drive jogs provided input C3 is low. When the Jog Input is removed the drive will ramp down to zero obeying the Jog Ramp Rate.	+24V = True/Jog 0V = False/Stop Threshold +16V	YES	C4

Terminal Information – Control Board

This Control Board is common to all 590+ units.

Terminal Description	Terminal Function	Signal Level	Configurable	Terminal Number
Enable Input	Enable The Enable Input provides a means of electronically inhibiting controller operation. If the enable input is not true all control loops will be inhibited and the controller will not function.	+24V = True/Enable 0V = False/Inhibit Threshold +16V	YES	C5
Digital Input 1	Current Clamp Select This input alters the configuration of the current clamps. With no connection, i.e., false, Analog I/P 5 provides a unipolar current limit. When true, Analog I/P5 is the positive current clamp, Analog I/P 4 is the negative current clamp.	+24V = True/Bipolar Clamp 0V = False/Unipolar Clamp Threshold +16V	YES	C6
Digital Input 2	Ramp Hold If the input is held true the S-Ramp output is frozen at the last value irrespective of the Ramped Setpoint Input. When false the S-Ramp Output follows the Ramped Setpoint Input with a delay determined by the Acceleration and Deceleration Ramped time parameters. Access encoder mode set-up & output parameters via the ENCODER 2 function block.	+24V = True/Hold 0V = False/Ramp Threshold + 16V Encoder CLK/DIRECTION Mode: CLOCK INPUT +5V to +24V = MARK 0V = SPACE	YES	C7
Digital Input 3	Current Demand Isolate This input alters the drive operation from Speed Control to Current Control. When digital input No. 3 is true, analog input No. 2 provides the current demand and the speed loop is disconnected. When false the speed loop is in control and analog input No. 2 is an auxiliary speed setpoint. Access encoder mode set-up & output parameters via the ENCODER 2 function block.	+24V = True/Current 0V = False/Speed Threshold + 16V Encoder CLK/DIRECTION Mode: DIRECTION INPUT +5V to +24V, or 0V	YES	C8

Terminal Information – Control Board

This Control Board is common to all 590+ units.

Terminal Description	Terminal Function	Signal Level	Configurable	Terminal Number
+24V Supply	+24V	Maximum output current: 200mA Note that the maximum combined consumption for digital outputs 1, 2 & 3 and C9 should not exceed 300mA. Some typical loads are given below: Microtach : 75mA Relays : 50mA each Fiber Optic ancillaries : 50mA each DeviceNetTechnology Box : 50mA	N/A	C9

Terminal Information (Frames 6 & H)

These terminals are located externally on the product.

Terminal Description	Terminal Function	Terminal Number
Three phase supply	Drive supply	L1 - L3
Armature + Armature -	Drive output to motor armature Drive output to motor armature	A+ A-
External field supply (Red Phase) External field supply (Yellow Phase)	External single phase ac Line 1 input to field bridge. External single phase ac Line 2 input to field bridge. Required AC Input Voltage = 1.11 x Nominal DC Output. The field regulator will control the field current provided that the Nominal DC Output voltage exceeds the field voltage by at least 10%. i.e. $V_{AC} = 1.11 \times V_{DC}$ and $V_{DC} = 1.1 \times V_{FIELD}$ therefore $V_{AC} = 1.22 \times V_{FIELD}$ The external AC supply must be fitted with high speed fuses to protect the field regulator. For controllers with 10A field capability 10A fuses should be used, those with 20A field capability 20A fuses, etc. *Note: When using an external AC input it is important to have the correct phase relationship on the terminals. The supply must be derived from L1 (Red) and L2 (Yellow) phases directly or indirectly through a transformer. L1 must be connected to FL1, and L2 to FL2.*	FL1 FL2
Field Output (DC+) Field Output (DC-)	DC supply for motor field connections. DC supply for motor field connections. The DC output voltage at these terminals will depend upon the AC supply voltage and the mode of field control. Maximum drive field output capability is 60A DC.	F+ F-
External Armature Volts Sense (+) External Armature Volts Sense (-)	This connection can be used if a more accurate value of armature voltage is required, for example a DC line reactor may be fitted. This terminal should be connected directly to the positive motor armature terminal. This terminal should be connected directly to the negative motor armature terminal (see above).	MVA+ MVA-

Terminal Information (Frames 6 & H)

These terminals are located externally on the product.

Auxiliary Supply Live 115-230V Frame 6 Auxiliary Supply Live 110-240V Frame H Auxiliary Supply Neutral	These terminals are the mains input connections for control supply transformer and contactor relay supply	L N
Main contactor coil V AC Main contactor coil V AC	This terminal is internally connected to the auxiliary supply neutral and provides a convenient connection point for the contactor coil neutral connection This terminal is the switched output from the contactor control relay and is derived from the auxiliary supply. The output is internally fused at 3A hence contactor coils having a high pick-up current must be operated via a slave relay. *Note: The contacts of the Contactor Control Relay are suppressed by a series connected resistor (680 Ohms) and capacitor (22nF) to protect the relay contacts. Users should be aware that when the contactor Control Relay is "De-energised", a leakage current of approximately 2mA can be expected and this should be considered when interfacing to these terminals. Typically, there could be the energisation of very sensitive relays.*	N C

Terminal Information – Option Boards

Terminal Description	Terminal Function	Signal Level	Terminal Number
TERMINAL BLOCK G (SWITCHABLE TACHO CALIBRATION OPTION)			
AC Tacho input	AC		G1
AC Tacho input	AC		G2
+ DC Tacho input	+DC		G3
- DC Tacho input	-DC		G4
Tacho Out	Calibrated Tacho Output		P3
(5701 MICROTACH RECEIVE OPTION - PLASTIC)			
Signal Input	Microtach fibre optic input	There are no other connections to this option module. (The 5701 Microtach should be powered by an external 24V DC at 60mA, 1.4W.)	F1

Terminal Information – Option Boards

Terminal Description	Terminal Function	Signal Level	Terminal Number
(5901 MICROTACH OPTION MODULE - GLASS)			
Signal Input	Microtach fibre optic input	There are no other connections to this option module. (The 5901 Microtach should be powered by an external 24V DC at 125mA, 3W.)	F1
TERMINAL BLOCK G (ENCODER OPTION)			
Terminal Block G pinouts will change function depending upon which option board is fitted to the control board. The configuration supplied as standard is with the Switchable Tacho Calibration Option fitted. Further information on the other options may be obtained from the relevant Technical Manual.			
TECHNOLOGY BOX OPTION (SERIAL COMMUNICATIONS)			
Refer to the Technical Manual supplied with the option for details.			

Wiring Requirements for EMC Compliance

Where shielded/armoured cables are specified, use "SY" or "CY" type cables for better performance.

	Power Supply Wire	Motor Wire	External Filter to Drive Wire	Signal/Control Wire
Wire Type (for EMC Compliance)	Unshielded	Shielded/ armored	Replace flying leads with shielded/armored when >0.6m	Shielded
Segregation	From all other wiring (clean)	From all other wiring (noisy)		From all other wiring (sensitive)
Length Limitations With External Filter	Unlimited	50 metres	As short as possible	25 metres
Shield to Ground Connection		Both ends	Both ends	Drive end only

Wire Sizes and Termination Tightening Torques (Frames 1-5)

- Power cables must have a minimum rating of 1.1 x full load current - EUROPE
- Control wiring must have a minimum cross-section area of 0.75mm^2 (18AWG)

Terminations	Maximum Tightening Torque	UL		EUROPE
		Recommended Wire Size	Maximum Terminal Aperture Size (AWG)	Maximum Terminal Aperture Size (mm^2)
All Units				
A1 – A9, B1 – B9, C1 – C9	0.6-0.8Nm (5-7 lb-in.)	14 AWG	12	2.5
Frame 1	15A, 35A UNITS			
A+, A-	1.8Nm (16 lb-in)	8-18 AWG	8	10
L1, L2, L3	1.8Nm (16 lb-in)	8-18 AWG	8	10
Grounding terminal	2.0Nm (17 lb-in.)	12 AWG	-	-
F+, F-	0.8Nm (7.0 lb-in)	14 AWG	12	2.5
L, N, 3, 4, TH1, TH2	0.5Nm (5.0 lb-in)	12 AWG	12	2.5
Frame 2				
	40A UNITS			
A+, A-	5.6Nm (50 lb-in)	8 AWG	2/0	70
L1, L2, L3	5.6Nm (50 lb-in)	8 AWG	2/0	70
Grounding terminal	5.6Nm (50 lb-in)	6 AWG	2/0	70
F+, F-	0.8Nm (7.0 lb-in)	14 AWG	12	2.5
L, N, 3, 4, TH1, TH2	0.5Nm (5.0 lb-in)	12 AWG	12	2.5
	70A UNITS			
A+, A-	5.6Nm (50 lb-in)	3 AWG	2/0	70
L1, L2, L3	5.6Nm (50 lb-in)	6 AWG	2/0	70
Grounding terminal	5.6Nm (50 lb-in)	6 AWG	2/0	70
F+, F-	0.8Nm (7.0 lb-in)	14 AWG	12	2.5
L, N, 3, 4, TH1, TH2	0.5Nm (5.0 lb-in)	12 AWG	12	2.5
	110A UNITS			
A+, A-	5.6Nm (50 lb-in)	1/0 AWG	2/0	70
L1, L2, L3	5.6Nm (50 lb-in)	3 AWG	2/0	70
Grounding terminal	5.6Nm (50 lb-in)	6 AWG	2/0	70
F+, F-	0.8Nm (7.0 lb-in)	14 AWG	12	2.5
L, N, 3, 4, TH1, TH2	0.5Nm (5.0 lb-in)	12 AWG	12	2.5

Wire Sizes and Termination Tightening Torques (Frames 1-5)

- Power cables must have a minimum rating of 1.1 x full load current - EUROPE
- Control wiring must have a minimum cross-section area of 0.75mm^2 (18AWG)

Terminations	Maximum Tightening Torque	UL		EUROPE
		Recommended Wire Size	Maximum Terminal Aperture Size (AWG)	Maximum Terminal Aperture Size (mm^2)
165A UNITS				
A+, A-	42.4Nm (375 lb-in)	4/0 AWG	250 cmil	120
L1, L2, L3	5.6Nm (50 lb-in)	1/0 AWG	2/0	70
Grounding terminal	5.6Nm (50 lb-in)	3 AWG	2/0	70
F+, F-	0.8Nm (7.0 lb-in)	14 AWG	12	2.5
L, N, 3, 4, TH1, TH2	0.5Nm (5.0 lb-in)	12 AWG	12	2.5
Frame 3				
180A, 270A UNITS				
A+, A-	11Nm (97 lb-in)	2/0 AWG	-	-
L1, L2, L3	11Nm (97 lb-in)	2/0 AWG	-	-
Grounding terminal	6.8Nm (60 lb-in)	2/0 AWG	-	-
D1- D8	0.45Nm (4.0 lb-in)	14 AWG	-	-
THERM+, THERM-	0.45Nm (4.0 lb-in)	14 AWG	-	-
Frame 4 & 5	380A, 500A, 725A, 830A, 1580A UNITS			
A+, A-	23Nm (204 lb-in)	-	-	
L1, L2, L3	23Nm (204 lb-in)	-	-	
Grounding terminal	6.8Nm (60 lb-in)	-	-	
FL1, FL2	0.8Nm (7 lb-in)	-	-	
F+, F-	0.8Nm (7 lb-in)	-	-	
Auxiliary supply, contactor and motor thermistor	0.6Nm (5 lb-in)	-	-	

Termination Tightening Torque (Frame 6)

Description	Fixings	Spanner Size	Format	Torque Nm
ACCT central bolt	M12	19mm	Bolts	45Nm (33 ft/lbf)
Fishplate fixings for A+, A-, L1, L2, L3	M10	17mm	Nut insert	55Nm (40.6 ft/lbf)
Phase Assembly Mountings	M10	17mm	Bolt	32Nm (23.6 ft/lbf)
Control Panel Assembly (support screws)	M6	10mm	Screw	4.5Nm (3.3 ft/lbf)
Fuse Assembly to Mounting Plate	M12	19mm	Bolt	45Nm (33 ft/lbf)
Fuse Assembly/Mounting Plate to Phase Assembly	M10	17mm	Bolt	32Nm (23.6 ft/lbf)

Termination Tightening Torque (Frame H)

Description	Fixings	Spanner Size	Format	Torque Nm
Drive Mounting Fixings	M12	19mm	Bolt	57.2
Ground studs on back panel	M10	17mm	Nut	32.8 (24.3 ft/lbf)
Fuse assy to Phase assy	M10	17mm	Bolt	24
AC Input & DC Output Bus bars	M12	19mm	Nut & Bolt	57.2
Fuse assembly	M12	19mm	Bolt	42 (31 ft/lbf)
Fuse assembly to CT	M12	19mm	Bolt	42 (31 ft/lbf)
DC Output terminal panel to side panel	M6	10mm	Bolt	6.8
DC Bus bars	M6	10mm	Nut	6.8
I/P terminal assy	M6	10mm	Nut	4
Lifting Bracket Fixings	M10	17mm	Bolt	24

Cooling Fans

Output Current (armature) (A)	Maximum Rating Ambient (°C)	Cooling Method	Number of Fans	Fan Power Rating 110/120V ac	Fan Power Rating 220/240V ac
Frame 1					
15	45	no fan	N/A	N/A	N/A
35	45	Integral Fan (24V dc)	1 (internal)	N/A	N/A
Frame 2					
40	45	Integral Fan (24V dc)	1 (internal)	N/A	N/A
70	45	Integral Fan (2 x 24V dc)	2 (internal)	N/A	N/A
110	45	Integral Fan (24V dc)	1 (internal)	N/A	N/A
165	45	Integral Fan (2 x 24V dc)	2 (internal)	N/A	N/A
Frame 3					
180	45	Forced Vent 120cfm (200m³/hr) @ 60Pa	1 (internal)	40W, 50/60Hz	45/39W, 50/60Hz
270	45	Forced Vent 120cfm (200m³/hr) @ 60Pa	1 (internal)	40W, 50/60Hz	45/39W, 50/60Hz
Frame 4					
380	40	Forced Vent 240cfm (410m³/hr) @ 200Pa	1 (internal)	130W, 10µF	140W, 2.5µF
500	40	Forced Vent 240cfm (410m³/hr) @ 200Pa	1 (internal)	130W, 10µF	140W, 2.5µF
725	40	Forced Vent 240cfm (410m³/hr) @ 200Pa	1 (internal)	130W, 10µF	140W, 2.5µF
830	40	Forced Vent 240cfm (410m³/hr) @ 200Pa	1 (internal)	130W, 10µF	140W, 2.5µF
Frame 5					
1580	40	Forced Vent 240cfm (410m³/hr) @ 200Pa	2 (internal)	130W, 10µF (each fan)	140W, 2.5µF (each fan)
Frame 6					
All ratings	40	Integral Fan (6 x 24V dc)	6 (internal)	48W See note below	48W See note below
Frame H					
1200	40	Separate Fan	2 (external)	See note below	See note below
1700	40	Separate Fan	2 (external)	See note below	See note below
2200	40	Separate Fan	2 (external)	See note below	See note below
2700	40	Separate Fan	2 (external)	See note below	See note below

Fans supplied with Frame 6 units have an air flow rate of 215cfm per fan (2 per phase assembly, 6 in total)

Fan SMPS:

115V ±10%, 3A, 300W or 230V ±10%, 1.5A, 300W Assembly Part Number LA466819

Fans supplied with Frame H units have an air flow rate per fan of 850m³/hr at 250 Pascal

Fan Ratings:

115V ac 50Hz, 1.67A, 177W, 2750 rpm, motor run capacitor 18µF

115V ac 60Hz, 2.21A, 240W, 2660 rpm, motor run capacitor 18µF

Spares List (Frames 1-5 & H)

Common Spares

Control Board			LED Board	Ribbon Cable
Software Version	Part Number	Status *		
5.x	AH470372U001	NOT CURRENT	AH465315U001	CM466762U002
7.x	AH470372U002	CURRENT	AH465315U001	CM466762U002

** Do not attempt to upgrade by fitting a later software version Control Board. You may experience hardware compatiblity problems. If in doubt, contact Parker SSD Drives.*

Frame 1

Product	Power Board	Terminal Board	*Armature Thyristor*	Field Bridge	Fan	Fan Assy
591P/0015/220/	AH470280U101	AH466407U001	CF470348	CF470349	-	-
590P/0015/220/	AH470280U102	AH466407U001	CF470348	CF470349	-	-
591P/0035/220/	AH470280U103	AH466407U001	CF470348	CF470349	DL469421	LA469707U001
590P/0035/220/	AH470280U104	AH466407U001	CF470348	CF470349	DL469421	LA469707U001
591P/0015/500/	AH470280U001	AH466407U001	CF470348	CF470349	-	-
590P/0015/500/	AH470280U002	AH466407U001	CF470348	CF470349	-	-
591P/0035/500/	AH470280U003	AH466407U001	CF470348	CF470349	DL469421	LA469707U001
590P/0035/500/	AH470280U004	AH466407U001	CF470348	CF470349	DL469421	LA469707U001

Spares List (Frames 1-5 & H)

Frame 2

Product	Power Board	Terminal Board	*Armature Thyristor*	Field Bridge	Fan	Fan Assy
591P/0040/220/	AH470330U101*	-	CF385522U016	CF470349	DL465313	No Sub Assembly
590P/0040/220/	AH470330U102*	-	CF385522U016	CF470349	DL465313	No Sub Assembly
591P/0070/220/	AH470330U101*	-	CF385524U016	CF470349	DL465313	No Sub Assembly
590P/0070/220/	AH470330U102*	-	CF385524U016	CF470349	DL465313	No Sub Assembly
591P/0110/220/	AH470330U101*	-	CF385525U016	CF470349	DL465313	No Sub Assembly
590P/0110/220/	AH470330U102*	-	CF385525U016	CF470349	DL465313	No Sub Assembly
591P/0165/220/	AH470330U101*	-	CF470523U095	CF470349	DL465313	No Sub Assembly
590P/0165/220/	AH470330U102*	-	CF470523U095	CF470349	DL465313	No Sub Assembly
591P/0040/500/	AH470330U001*	-	CF385522U016	CF470349	DL465313	No Sub Assembly
590P/0040/500/	AH470330U002*	-	CF385522U016	CF470349	DL465313	No Sub Assembly
591P/0070/500/	AH470330U001*	-	CF385524U016	CF470349	DL465313	No Sub Assembly
590P/0070/500/	AH470330U002*	-	CF385524U016	CF470349	DL465313	No Sub Assembly
591P/0110/500/	AH470330U001*	-	CF385525U016	CF470349	DL465313	No Sub Assembly
590P/0110/500/	AH470330U002*	-	CF385525U016	CF470349	DL465313	No Sub Assembly
591P/0165/500/	AH470330U001*	-	CF470523U095	CF470349	DL465313	No Sub Assembly
590P/0165/500/	AH470330U002*	-	CF470523U095	CF470349	DL465313	No Sub Assembly

Frame 3 Fitted with the 590PXD Door Assembly LA466454U001 containing the Control Board and Adaptor Board AH466405U001

Product	Power Board	*Armature Thyristor*	Field Bridge	Fan 115V	Fan 230V
591P/0180/220/	AH385851U004	CF385525U016	CF057273U016	DL043707	DL056383
590P/0180/220/	AH385851U005	CF385525U016	CF057273U016	DL043707	DL056383
591P/0270/220/	AH385851U004	CF057366U014	CF057273U016	DL043707	DL056383
590P/0270/220/	AH385851U005	CF057366U014	CF057273U016	DL043707	DL056383
591P/0180/500/	AH385851U003	CF385525U016	CF057273U016	DL043707	DL056383
590P/0180/500/	AH385851U002	CF385525U016	CF057273U016	DL043707	DL056383
591P/0270/500/	AH385851U003	CF057366U014	CF057273U016	DL043707	DL056383
590P/0270/500/	AH385851U002	CF057366U014	CF057273U016	DL043707	DL056383

NOTE * **This PCB is a composite assembly and contains a Power Board, a Terminal Board and a CT Board**

Spares List (Frames 1-5 & H)

Frame 4 Fitted with the 590PD Door Assembly LA466454U002 containing the Control Board

Product	Power Board	Suppression Board	Trigger Board	Thyristor
591P/0380/220/	AH466701U001	AH466704U001	AH466703U002	CF466796U016
590P/0380/220/	AH466701U001	AH466704U001	AH466703U002	CF466796U016
591P/0500/220/	AH466701U001	AH466704U001	AH466703U002	CF466768U016
590P/0500/220/	AH466701U001	AH466704U001	AH466703U002	CF466768U016
591P/0725/220/	AH466701U001	AH466704U001	AH466703U002	CF466697U016
590P/0725/220/	AH466701U001	AH466704U001	AH466703U002	CF466697U016
591P/0830/220/	AH466701U001	AH466704U001	AH466703U002	CF466767U016
590P/0830/220/	AH466701U001	AH466704U001	AH466703U002	CF466767U016
591P/0380/500/	AH466701U002	AH466704U001	AH466703U002	CF466796U016
590P/0380/500/	AH466701U002	AH466704U001	AH466703U002	CF466796U016
591P/0500/500/	AH466701U002	AH466704U001	AH466703U002	CF466768U016
590P/0500/500/	AH466701U002	AH466704U001	AH466703U002	CF466768U016
591P/0725/500/	AH466701U002	AH466704U001	AH466703U002	CF466697U016
590P/0725/500/	AH466701U002	AH466704U001	AH466703U002	CF466697U016
591P/0830/500/	AH466701U002	AH466704U001	AH466703U002	CF466767U016
590P/0830/500/	AH466701U002	AH466704U001	AH466703U002	CF466767U016
591P/0380/600/	AH466701U003	AH466704U002	AH466703U002	CF466796U018
590P/0380/600/	AH466701U003	AH466704U002	AH466703U002	CF466796U018
591P/0500/600/	AH466701U003	AH466704U002	AH466703U002	CF466768U018
590P/0500/600/	AH466701U003	AH466704U002	AH466703U002	CF466768U018
591P/0725/600/	AH466701U003	AH466704U002	AH466703U002	CF466697U018
590P/0725/600/	AH466701U003	AH466704U002	AH466703U002	CF466697U018
591P/0830/600/	AH466701U003	AH466704U002	AH466703U002	CF466767U018
590P/0830/600/	AH466701U003	AH466704U002	AH466703U002	CF466767U018

Spares List (Frames 1-5 & H)

Frame 4 Fitted with the 590PD Door Assembly LA466454U002 containing the Control Board

Product	Field Thyristor	Field Diode	Fan + Capacitor Assembly 115V	Fan + Capacitor Assembly 230V
591P/0380/220/ 590P/0380/220/	CF385522U016 CF385522U016	CW464320U016 CW464320U016	LA466711U001 LA466711U001	LA466711U002 LA466711U002
591P/0500/220/ 590P/0500/220/	CF385522U016 CF385522U016	CW464320U016 CW464320U016	LA466711U001 LA466711U001	LA466711U002 LA466711U002
591P/0725/220/ 590P/0725/220/	CF385522U016 CF385522U016	CW464320U016 CW464320U016	LA466711U001 LA466711U001	LA466711U002 LA466711U002
591P/0830/220/ 590P/0830/220/	CF385522U016 CF385522U016	CW464320U016 CW464320U016	LA466711U001 LA466711U001	LA466711U002 LA466711U002
591P/0380/500/ 590P/0380/500/	CF385522U016 CF385522U016	CW464320U016 CW464320U016	LA466711U001 LA466711U001	LA466711U002 LA466711U002
591P/0500/500/ 590P/0500/500/	CF385522U016 CF385522U016	CW464320U016 CW464320U016	LA466711U001 LA466711U001	LA466711U002 LA466711U002
591P/0725/500/ 590P/0725/500/	CF385522U016 CF385522U016	CW464320U016 CW464320U016	LA466711U001 LA466711U001	LA466711U002 LA466711U002
591P/0830/500/ 590P/0830/500/	CF385522U016 CF385522U016	CW464320U016 CW464320U016	LA466711U001 LA466711U001	LA466711U002 LA466711U002
591P/0380/600/ 590P/0380/600/	CF385523U018 CF385523U018	CW464320U018 CW464320U018	LA466711U001 LA466711U001	LA466711U002 LA466711U002
591P/0500/600/ 590P/0500/600/	CF385523U018 CF385523U018	CW464320U018 CW464320U018	LA466711U001 LA466711U001	LA466711U002 LA466711U002
591P/0725/600/ 590P/0725/600/	CF385523U018 CF385523U018	CW464320U018 CW464320U018	LA466711U001 LA466711U001	LA466711U002 LA466711U002
591P/0830/600/ 590P/0830/600/	CF385523U018 CF385523U018	CW464320U018 CW464320U018	LA466711U001 LA466711U001	LA466711U002 LA466711U002

Spares List (Frames 1-5 & H)

Frame 5 Fitted with the 590PD Door Assembly LA466454U002 containing the Control Board

Product	Power Board	Suppression Board	Trigger Board	Slave Power
591P/1580/220/	AH466701U001	AH466704U001	AH466703U002	* AH466706U001
590P/1580/220/	AH466701U001	AH466704U001	AH466703U002	* AH466706U001
591P/1580/500/	AH466701U002	AH466704U001	AH466703U002	* AH466706U002
590P/1580/500/	AH466701U002	AH466704U001	AH466703U002	* AH466706U002
591P/1580/600/	AH466701U003	AH466704U002	AH466703U002	* AH466706U003
590P/1580/600/	AH466701U003	AH466704U002	AH466703U002	* AH466706U003

Product	Thyristor	Field Thyristor	Field Diode	Fan + Capacitor Assembly 115V	Fan + Capacitor Assembly 230V
591P/1580/220/	CF466767U016	CF385522U016	CW464320U016	LA466711U001	LA466711U002
590P/1580/220/	CF466767U016	CF385522U016	CW464320U016	LA466711U001	LA466711U002
591P/1580/500/	CF466767U016	CF385522U016	CW464320U016	LA466711U001	LA466711U002
590P/1580/500/	CF466767U016	CF385522U016	CW464320U016	LA466711U001	LA466711U002
591P/1580/600/	CF466767U018	CF385523U018	CW464320U018	LA466711U001	LA466711U002
590P/1580/600/	CF466767U018	CF385523U018	CW464320U018	LA466711U001	LA466711U002

Note: *** This PCB is a composite assembly and contains a Power Board and a Parallel Expansion Board**

Spares List (Frames 1-5 & H)

Frame H Fitted with the 590PXD Door Assembly LA466454U001 containing the Control Board and Adaptor Board AH466405U001

Product	Power Board	Trigger Board	Suppression Board	Snubber Board
591P/1200/500/ 590P/1200/500/	AH466001U101 AH466001U101	AH466003U001 AH466003U001	AH466003U003	AH466004U001 AH466004U001
591P/1700/500/ 590P/1700/500/	AH466001U101 AH466001U101	AH466003U001 AH466003U001	AH466003U003	AH466004U001 AH466004U001
591P/2200/500/ 590P/2200/500/	AH466001U101 AH466001U101	AH466003U101 AH466003U101	AH466003U103	AH466004U101 AH466004U101
591P/2700/500/ 590P/2700/500/	AH466001U101 AH466001U101	AH466003U101 AH466003U101	AH466003U103	AH466004U101 AH466004U101
591P/1200/690/ 590P/1200/690/	AH466001U001 AH466001U001	AH466003U002 AH466003U002	AH466003U004	AH466004U002 AH466004U002
591P/1700/690/ 590P/1700/690/	AH466001U001 AH466001U001	AH466003U002 AH466003U002	AH466003U004	AH466004U002 AH466004U002
591P/2200/690/ 590P/2200/690/	AH466001U001 AH466001U001	AH466003U102 AH466003U102	AH466003U104	AH466004U102 AH466004U102
591P/2700/690/ 590P/2700/690/	AH466001U001 AH466001U001	AH466003U102 AH466003U102	AH466003U104	AH466004U102 AH466004U102

Frame H Fitted with the 590PXD Door Assembly LA466454U001 containing the Control Board and Adaptor Board AH466405U001

Product	Field Assembly	Phase Assembly	Fuses	Fan 110V
591P/1200/500/ 590P/1200/500/	LA466030U001 LA466030U001	LA466059U012 LA466059U012	CS466260U050 CS466261U035	DL466242 DL466242
591P/1700/500/ 590P/1700/500/	LA466030U001 LA466030U001	LA466059U017 LA466059U017	CS466260U080 CS466261U055	DL466242 DL466242
591P/2200/500/ 590P/2200/500/	LA466030U001 LA466030U001	LA466059U022 LA466059U022	CS466260U100 CS466261U070	DL466242 DL466242
591P/2700/500/ 590P/2700/500/	LA466030U001 LA466030U001	LA466059U027 LA466059U027	CS466260U125 CS466261U090	DL466242 DL466242
591P/1200/690/ 590P/1200/690/	LA466030U002 LA466030U002	LA466059U112 LA466059U112	CS466260U050 CS466261U035	DL466242 DL466242
591P/1700/690/ 590P/1700/690/	LA466030U002 LA466030U002	LA466059U117 LA466059U117	CS466260U080 CS466261U055	DL466242 DL466242
591P/2200/690/ 590P/2200/690/	LA466030U002 LA466030U002	LA466059U122 LA466059U122	CS466260U100 CS466261U070	DL466242 DL466242
591P/2700/690/ 590P/2700/690/	LA466030U002 LA466030U002	LA466059U127 LA466059U127	CS466260U125 CS466261U090	DL466242 DL466242

Spares List (Frame 6)

590P - Regenerative (4Q)				
Drive Model Number		**590P/1250/500**	**590P/1600/500**	**590P/1950/500**
Gantry		590PG/500/0011/UK/000	590PG/500/0011/UK/000	590PG/500/0011/UK/000
Gantry Parts	**Door**	590PXD	590PXD	590PXD
	Power Board	AH469419U012	AH469419U012	AH469419U012
	Field Assembly	LA466030U001	LA466030U001	LA466030U001
	Fan SMPS	LA466819	LA466819	LA466819
Phase Assembly	**Recommended Spare**	590PL/1250/500	590PL/1600/500	590PL/1950/500
Phase Assembly Parts	**Fuse**	CS466261U070	CS466261U100	CS466261U125
	Suppression Assembly	AH469353U102	AH469353U102	AH469353U102
	Trigger Board	AH469354U402	AH469354U402	AH469354U402
	Fan Assembly	LA469905	LA469905	LA469905
	ACCT	CO466109U001	CO466109U001	CO466109U001
	Fuse Microswitch	DC466265	DC466265	DC466265
Possible Spare Parts	***Thyristor***	*CF469820U016*	*CF469821U016*	*CF469822U016*
	Clamp	*LA469670U002*	*LA469670U002*	*LA469670U003*
	Thermostat	*CM469898U002*	*CM469898U003*	*CM469898U004*
Drive Model Number		**590P/1250/690**	**590P/1600/690**	**590P/1950/690**
Gantry		590PG/690/0011/UK/000	590PG/690/0011/UK/000	590PG/690/0011/UK/000
Gantry Parts	**Door**	590PXD	590PXD	590PXD
	Power Board	AH469419U011	AH469419U011	AH469419U011
	Field Assembly	LA466030U002	LA466030U002	LA466030U002
	Fan SMPS	LA466819	LA466819	LA466819
Phase Assembly	**Recommended Spare**	590PL/1250/690	590PL/1600/690	590PL/1950/690
Phase Assembly Parts	**Fuse**	CS466261U070	CS466261U100	CS466261U125
	Suppression Assembly	AH469353U101	AH469353U101	AH469353U101
	Trigger Board	AH469354U401	AH469354U401	AH469354U401
	Fan Assembly	LA469905	LA469905	LA469905
	ACCT	CO466109U001	CO466109U001	CO466109U001
	Fuse Microswitch	DC466265	DC466265	DC466265
Possible Spare Parts	***Thyristor***	*CF469823U022*	*CF469824U022*	*CF469825U022*
	Clamp	*LA469670U002*	*LA469670U003*	*LA469670U003*
	Thermostat	*CM469898U002*	*CM469898U003*	*CM469898U004*

Spares List (Frame 6)

591P - Non-Regenerative (2Q)

Drive Model Number		591P/1250/500	591P/1600/500	591P/1950/500
Gantry		590PG/500/0011/UK/000	590PG/500/0011/UK/000	590PG/500/0011/UK/000
Gantry Parts	**Door**	590PXD	590PXD	590PXD
	Power Board	AH469419U012	AH469419U012	AH469419U012
	Field Assembly	LA466030U001	LA466030U001	LA466030U001
	Fan SMPS	LA466819	LA466819	LA466819
Phase Assembly	**Recommended Spare**	591PL/1250/500	591PL/1600/500	591PL/1950/500
Phase Assembly Parts	**Fuse**	CS466260U100	CS466260U140	CS466260U180
	Suppression Assembly	AH469353U102	AH469353U102	AH469353U102
	Trigger Board	AH469354U202	AH469354U202	AH469354U202
	Fan Assembly	LA469905	LA469905	LA469905
	ACCT	CO466109U001	CO466109U001	CO466109U001
	Fuse Microswitch	Not required	Not required	Not required
Possible Spare Parts	***Thyristor***	*CF469820U016*	*CF469821U016*	*CF469822U016*
	Clamp	*LA469671U002*	*LA469671U002*	*LA469671U003*
	Thermostat	*CM469898U002*	*CM469898U003*	*CM469898U004*
Drive Model Number		**591P/1250/690**	**591P/1600/690**	**591P/1950/690**
Gantry		590PG/690/0011/UK/000	590PG/690/0011/UK/000	590PG/690/0011/UK/000
Gantry Parts	**Door**	590PXD	590PXD	590PXD
	Power Board	AH469419U011	AH469419U011	AH469419U011
	Field Assembly	LA466030U002	LA466030U002	LA466030U002
	Fan SMPS	LA466819	LA466819	LA466819
Phase Assembly	**Recommended Spare**	591PL/1250/690	591PL/1600/690	591PL/1950/690
Phase Assembly Parts	**Fuse**	CS466260U100	CS466260U140	CS466260U180
	Suppression Assembly	AH469353U101	AH469353U101	AH469353U101
	Trigger Board	AH469354U201	AH469354U201	AH469354U201
	Fan Assembly	LA469905	LA469905	LA469905
	ACCT	CO466109U001	CO466109U001	CO466109U001
	Fuse Microswitch	Not required	Not required	Not required
Possible Spare Parts	***Thyristor***	*CF469823U022*	*CF469824U022*	*CF469825U022*
	Clamp	*LA469671U002*	*LA469671U003*	*LA469671U003*
	Thermostat	*CM469898U002*	*CM469898U003*	*CM469898U004*

590PXD Control Board

Software Version	Part Number	Status *
7.x	AH470372U002	CURRENT

** Do not attempt to upgrade by fitting a later software version Control Board. You may experience hardware compatibility problems. If in doubt, contact SSD Drives.*